STATE LIBRARY OF PENNSYLVANIA
3 0144 00336052 6

S
620.6
En37p
v.32

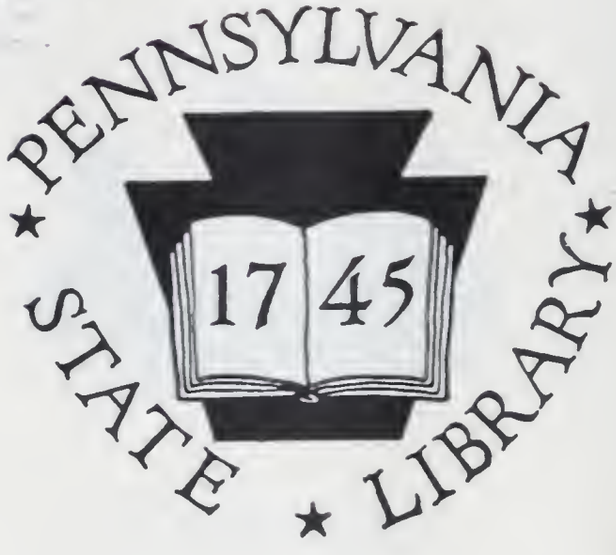

Digitized by the Internet Archive
in 2018 with funding from
This project is made possible by a grant from the Institute of Museum and Library Services as administered by the Pennsylvania Department of Education through the Office of Commonwealth Libraries

https://archive.org/details/vol33proceedings00engi

Proceedings of

The Engineers' Society

of

Western Pennsylvania

VOLUME 33

FEBRUARY 1917—JANUARY 1918

INCORPORATED 1880

PUBLISHED BY THE SOCIETY

UNION ARCADE BUILDING
PITTSBURGH

1918

PENNSYLVANIA
STATE LIBRARY

CONTENTS

PAGE

The Window Glass Machine, *Robert Linton* 1

Historic Failures of Masonry Structures, *Horace R. Thayer* 31

Blast Furnace and Steel Mill Power Plants, *Richard H. Rice, and Sanford A. Moss* 81

The Possibilities of Smokeless Operation of Heating Furnaces and Soaking Pits, *Topical Discussion* 131

Burning Blast Furnace Gas under Boilers, *Topical discussion* 167

Air Drying for Blast Furnaces, *Leon Cammen* 199

Important Features Relating to the Design and Improvement of City Streets, *N. S. Sprague* 205

Cotton Rope for Power Transmission, *J. Melville Alison* 271

Some Fundamentals of Schoolhouse Design, *C. L. Wooldridge* 304

Broad Rails versus Deep Rails, *George H. Barbour* 327

History of the Development of Rail on the Baltimore & Ohio Railroad, *Earl Stimson* 379

An Efficient Gas Fired Boiler Installation, *J. C. Hobbs* 421

Hydrated Lime and Its Qualifications as a Structural Material, *Bela Nagy* 457

Wheel Contacts on Railheads, *George H. Barbour* 489

Modern Condenser Practice, *D. D. Pendleton* 523

Radiotelegraphy and Radiotelephony, *S. M. Kintner* 581

Industrial Housing, *H. Walter Forster* 610

The Situation in Regard to Manganese, Sulphur, Pyrite, and Some Other War Minerals, *J. E. Johnson, Jr.* 643

The Manufacture and Use of Die-Castings, *Charles Pack* 668

184648

AUTHOR INDEX

Alison, J. Melville 271
Barbour, George H 327, 489
Cammen, Leon 199
Forster, H. Walter 610
Hobbs, J. C 421
Johnson, J. E., Jr 643
Kintner, S. M 581
Linton, Robert 1
Moss, Sanford A 81
Nagy, Bela 457
Pack, Charles 668
Pendleton, D. D 523
Rice, Richard H 81
Sprague, N. S 205
Stimson, Earl 379
Thayer, Horace R 31
Wooldridge, C. L 304

GENERAL INDEX

Accidents, *See* Masonry failures.
Acoustics. Schoolhouse, 321.
Aeroplane signaling, *See* Radiotelegraphy.
AFFELDER, W. L., Discussion of Minerals, 660, 661, 663, 664, 666.
Air Drying for Blast Furnaces, LEON CAMMEN, 199.
ALISON, J. MELVILLE, *Cotton Rope for Power Transmission*, 271.
ALLEN, J. C., Discussion of Rope drive, 298.
Aluminum-alloy castings, *See* Die-castings.
Asphalt, *See* Pavements. Street improvement.
Baffles, 448, 449, 455.
Ballast, *See* Track construction, Railway.
Baltimore & Ohio Railroad. Rail development, 379.
BANCEL, PAUL A., Discussion of Condensers, 558.
BANNISTER, BRYANT, Discussion of Blast furnace power plants, 127.
BARBOUR, GEORGE H., *Broad Rails versus Deep Rails*, 327.
BARBOUR, GEORGE H., *Wheel Contacts on Railheads*, 489.
BECK, E. A., Discussion of Streets, 260.
Billet-heating furnaces, *See* Heating furnaces.
BISHOP, F. L., Discussion of Window glass machine, 27.
Blast-furnace.
    Air drying, 199.
    Cost of plant, 204.
    Calcium chlorid, 199.
Blast Furnace and Steel Mill Power Plants, RICHARD H. RICE, AND SANFORD A. MOSS, 81.
Blast-furnace gas.
    Boilers, 167, 184, 192.
    Burned with coal, 173, 186.
    Burners, 171, 175, 187.
        Gas pressure, 183.
        Temperatures, 179.
    Stack temperatures, 185, 195, 198.
    Washing, 103, 107.
Blast-furnace operation.
    Atmospheric variation, 83, 129.
    Blast. Variations, 82.
    Blower regulation, 84.
    Carbon. Consumption, 108.
    Gas analyses, 109.
    Surging, 85.
    Variations, 82.
    See also Power-plant, Steel-mill.
Blowing engine, *See* Power-plant, Steel-mill.
BLUM, LOUIS P., Discussion of Industrial housing, 622, 623.

BLUM, LOUIS P., Discussion of Schoolhouse design, 318, 320.
BLUM, LOUIS P., Discussion of Streets, 249.
Boilers, *See* Blast-furnace plant. Power-plant.
BRANDT, L., Discussion of Industrial housing, 630.
Brass castings, *See* Die-castings.
Brick. Limitations as structural material, 52.
Brickwork, *See* Masonry failures.
BRIGEL, S. G., Discussion of Blast-furnace gas, 183, 184.
Brine, *See* Air drying, *under* Blast-furnace.
Broad Rails versus Deep Rails, GEORGE H. BARBOUR, 327.
BRONSON, C, B., Discussion of Rail design, 354.
Bronze castings, *See* Die-castings.
Building materials, *See* Brick. Concrete. Housing, Industrial. Lime. Masonry. Masonry failures. Timber.
Burning Blast Furnace Gas under Boilers, TOPICAL DISCUSSION, 167.
Calcium chlorid, *See* Air drying, *under* Blast-furnace.
CAMMEN, LEON, *Air Drying for Blast Furnaces*, 199.
CASE, GEORGE W., Discussion of Industrial housing, 636.
CHAMBERLAIN, GEORGE D., Discussion of Minerals, 661.
Chimney, *See* Power-plant, Gas-fired.
CHRISTY, G. L., Correspondence on Historic failures of masonry structures, 77.
Chromium. War-time production, 655, 667.
CIVIC CLUB OF ALLEGHENY COUNTY (Representative), Discussion of Industrial housing, 637.
CLARK, E. F., Discussion of Condensers, 556, 558, 567.
CLARK, H. F., Discussion of Window glass machine, 30.
Coherer, *See* Radiotelegraphy.
Coke-oven gas, *See* Fuel.
Concrete.
  Efflorescence, 478, 484.
  Factors contributing to failures, 34.
  Flat-slab construction, 60, 71.
  Freezing, 34, 48, 51, 63, 64, 79.
  Properties, 466, 476.
  Waterproofing, 470, 480, 483.
  See also Masonry. Masonry failures.
Condensers, 523.
  Auxiliaries, 532.
  Barometric, 526, 547, 569.
  Cooling towers, 551, 558, 576.
  Feed water, 523.
  Heat transmission, 572, 578.
  Jet, 525, 527, 536, 546, 556, 569, 575.
  Limitations of various types, 527, 556, 573.
  Rating, 540.

Surface, 524, 527, 538, 544, 557, 560, 571.
Tube cleaning, 562, 567.
Water velocity, 571.
Cooling towers, *See* Condensers.
Copper-zinc castings, *See* Die-castings.
Cotton Rope for Power Transmission, J. Melville Alison, 271.
Cotton vs. manila rope, *See* Rope drive.
Cronemeyer, H. C., Discussion of Blast-furnace gas, 169, 184.
Crossties, 327, 329, 340, 343, 346, 355.
Cushing, W. C., Discussion of Rail design, 368, 375.
Dams. Failure, *See* Masonry failures.
Danforth, George H., Discussion of Schoolhouse design, 319.
Darlington, H., Discussion of Minerals, 664.
Davis, A. G., Discussion of Boilers, 450.
Die-castings, 668.
Aluminum-alloy, 681, 691.
Brass and bronze, 682, 683.
Copper-zinc, 682.
Die construction, 676.
History, 668.
Lead-alloy, 680.
Tin-alloy, 679.
Zinc-alloy, 678, 683, 686.
Diehl, A. N., Discussion of Blast-furnace power-plants, 123, 158, 160, 165.
Diehl, A. N., Discussion of Heating furnaces, 131.
Dillon, Sydney, Discussion of Blast-furnace power-plants, 127.
Drainage, *See* Street improvement.
Dry blast, *See* Air drying, *under* Blast-furnace.
Duff, Edward E., Jr., Discussion of Streets, 258, 259.
Duff, Samuel E., Discussion of Window glass machine, 24.
Eastman, H. M., Discussion of Schoolhouse design, 319.
Eaton, C. M., Discussion of Rail design, 507, 509.
Efficient Gas Fired Boiler Installation, J. C. Hobbs, 421.
Efflorescence, *See* Concrete.
Egan, Frank L., Discussion of Die-castings, 690, 691, 692.
Egan, Frank L., Discussion of Rope drive, 301.
Failure of structures, *See* Masonry failures.
Feed water, *See* Condensers.
Ferguson, John A., Correspondence on Historic failures of masonry structures, 56.
Ferguson, John A., Discussion of Lime, 474.
Ferguson, John A., Discussion of Schoolhouse design, 312.
Flat-slab construction, *See* Concrete.
Flue-gas, *See* Gas analyses.
Follows, George H., Discussion of Die-castings, 684.

FORSTER, H. WALTER, *Industrial Housing*, 610.
Foundations, Pavement, *See* Street improvement.
FOWLER, GEORGE L., Discussion of Rail design, 347.
FRINK, R. L., Discussion of Window glass machine, 23.
FROHRIEB, L. C., Discussion of Blast-furnace gas, 188.
FROHRIEB, L. C., Discussion of Boilers, 445.
Fuel.
    Blast-furnace gas, 150.
    Coal and blast-furnace gas, combined, 173, 186.
    Coal production, 153.
    Coke-oven gas, 150.
    Cost of coal for steel-mill power-plant, 114, 117, 130.
    Heating furnace, 133, 150.
    Natural gas for heating furnaces, 136, 146.
    Natural gas for heating plant, 421.
Furnace, *See* Blast-furnace operation. Heating furnaces.
Gas analyses.
    Blast-furnace gas, 109.
    Flue-gas, 198, 438, 445.
Gas burner, *See* Blast-furnace gas. Power-plant, Gas-fired.
Gas washing.
    Blast-furnace, 103, 107, 167.
    Heating furnaces, 134, 161.
GLASS, JOHN, Discussion of Blast-furnace gas, 188.
Glass, *See* Window glass.
GODFREY, EDWARD, Correspondence on Historic failures of masonry structures, 65.
GODFREY, EDWARD, Discussion of Lime, 482.
GOODALE, S. L., Discussion of Rope drive, 297.
Government ownership, *See* Radiotelegraphy.
GRAHAM, W. G., Discussion of Heating furnaces, 154.
HANDY, JAMES O., Discussion of Minerals, 666.
HARDIN, C. M., Discussion of Condensers, 567.
HARRIS, ELMER F., Discussion of Industrial housing, 634.
HART,—, Discussion of Rope drive, 300.
Heat transmission, *See* Condensers.
Heating, Schoolhouse, 311.
Heating furnaces.
    Coke-oven gas, 150.
    Mechanical stoking, 137, 154, 157, 164, 165.
    Natural-gas fired, 133, 136, 146, 157, 160, 163.
    Producer-gas fired, 140, 157.
    Pulverized-fuel fired, 140.
    Smokeless operation, 131.
    Temperature, 133, 135, 145, 151, 152, 159.
    Washed gas, 134, 161.

Heating plant, *See* Power-plant, Gas-fired.
HENDERSON, J. W., Discussion of Heating furnaces, 151, 156, 160.
HENRY, F. E., Discussion of Heating furnaces, 157, 158, 159, 163.
Heterodyne, *See* Radiotelegraphy.
HICE, RICHARD R., Discussion of Minerals, 667.
HILES, ELMER K., Discussion of Rope drive, 299, 300, 302, 303.
HILES, ELMER K., Discussion of Window glass machine, 26.
HIPPLE, O. P., Discussion of Industrial housing, 635.
Historic Failures of Masonry Structures, HORACE R. THAYER, 31.
History of the Development of Rail on the Baltimore & Ohio Railroad, EARL STIMSON, 379.
HOBBS, J. C., Discussion of Condensers, 559, 567, 571.
HOBBS, J. C., *Efficient Gas Fired Boiler Installation*, 421.
HOERR, ALEX. L., Discussion of Blast-furnace power-plants, 115.
HOERR, ALEX. L., Discussion of Boilers, 442.
HOERR, ALEX. L., Discussion of Heating furnaces, 154.
Housing, Industrial, 610.
    Cost, 615, 623, 633.
    Materials, 614, 621, 631.
    Segregation of races and nationalities, 627, 635, 639, 641.
HUBBARD, FRED, Discussion of Industrial housing, 620, 622, 623.
Hydrated lime, *See* Lime, Hydrated.
Hydrated Lime and Its Qualifications as a Structural Material, BELA NAGY, 457.
Important Features Relating to the Design and Improvement of City Streets, N. S. SPRAGUE, 265.
Industrial Housing, H. WALTER FORSTER, 610.
JOHNSON, J. E., JR., *Situation in Regard to Manganese, Sulphur, Pyrite, and Some Other War Minerals*, 643.
JONES, JESSE L., Discussion of Die-castings, 683.
KENNEDY, JULIAN, Discussion of Heating furnaces, 134.
KINTNER, S. M., Discussion of Window glass machine, 26.
KINTNER, S. M., *Radiotelegraphy and Radiotelephony*, 581.
KNESCHE, J. A., Discussion of Blast-furnace gas, 192.
KNOPFF, J. R., Discussion of Heating furnaces, 163.
KUEGLE, P. C., Discussion of Industrial housing, 625.
LA BACH, PAUL M., Discussion of Rail design, 368.
LAMOREE, J. K., Discussion of Heating furnaces, 155, 159.
LARNED, J. M., Discussion of Streets, 261.
LAUMAN, W. H., Discussion of Industrial housing, 626.
Lead-alloy castings, *See* Die-castings.
LEAF, J. P., Discussion of Streets, 261.
LEAHY, FRANK, Discussion of Blast-furnace gas, 166.
LELAND, E. D., Discussion of Blast-furnace gas, 181, 184.
LELAND, E. D., Discussion of Boilers, 443.
LELAND, E. D., Discussion of Window glass machine, 24, 27.

Lighting, Schoolhouse, 311.
Lime, Hydrated, 457.
    Concrete, 466, 476.
    Definition, 460.
    History, 457.
    Manufacture, 458.
    Mortar, 461, 462, 479, 480.
    Plaster, 461.
    Stucco, 461.
LINCOLN, P. M., Discussion of Blast-furnace power-plants, 124.
LINDENTHAL, GUSTAV, Discussion of Rail design, 345.
LINTON, ROBERT, Discussion of Industrial housing, 624.
LINTON, ROBERT, *The Window Glass Machine*, 1.
Locomotives.
    Early types, 327, 354.
    Effect on track, 349, 355.
MCCONNELL, M. F., Discussion of Heating furnaces, 138, 159, 163.
MCKINLEY, T. C., Discussion of Window glass machine, 28.
Manganese. War-time production, 643, 660.
Manganese-bronze castings, *See* Die-castings.
Manila vs. cotton rope, *See* Rope drive.
Manufacture and Use of Die-Castings, CHARLES PACK, 668.
Masonry.
    Definition, 31, 57.
    Destructive agents, 35, 64, 75, 77, 79.
    Durability, 35.
    Properties, 32.
    See also Concrete.
Masonry failures, 31.
    Abutments, 44, 55.
    Arches, 45, 55, 69.
    Brickwork, 52, 71, 73.
    Bridge piers, 44.
    Buildings, 46, 60, 70.
    Causes, 39, 57, 77.
    Chimneys, 73.
    Concrete. Defects, 34.
    Dams, 40, 65.
    Retaining walls, 44, 74, 77.
    See also Concrete, Freezing.
Minerals. War-time production, 643.
Modern Condenser Practice, D. D. PENDLETON, 523.
Mortar, *See* Lime, Hydrated.
MOSS, SANFORD A. AND RICE, RICHARD H., *Blast Furnace and Steel Mill Power Plants*, 81.

NAGY, BELA., *Hydrated Lime and Its Qualifications as a Structural Material*, 457.
NIELSON, GEORGE H., Discussion of Streets, 249.
OTTESEN, FREDERICK, Discussion of Blast-furnace power-plants, 116.
PACK, CHARLES, *Manufacture and Use of Die-Castings*, 668.
Pavements, 235.
    Asphalt, 238, 260.
    Brick, 242.
    Concrete, 243, 254.
    Bituminous concrete, 238.
    Life of various materials, 245, 256.
    Stone block, 240.
    Wood block, 241.
    See also Sidewalks. Street improvement.
PENDLETON, D. D., *Modern Condenser Practice*, 523.
Pittsburgh. Glass manufacture in Allegheny, 7, 9, 22, 28.
Plaster, *See* Lime, Hydrated.
PORTER, HORACE C., Discussion of Heating furnaces, 150.
PORTER, W. E., Discussion of Heating furnaces, 162, 163.
Possibilities of Smokeless Operation of Heating Furnaces and Soaking Pits, TOPICAL DISCUSSION, 131.
Potash. War-time production, 656, 663, 664.
Power-plant, Gas-fired, 421.
    Baffles, 448, 449, 455.
    Chimney, 455.
    Economy, 438.
    Furnace temperatures, 450, 455.
    Gas burner, 444, 449.
Power-plant, Steel-mill, 81, 442.
    Blast-furnace gas. Utilization, 92, 101, 167.
    Blowing equipment, 106, 121, 124, 127, 129.
    Boilers, 103, 109, 115, 167, 179.
    Coal. Cost, 114, 117, 130.
    Economy of gas plant vs. steam plant, 89, 96, 98, 127, 175.
    Electric power distribution, 105, 110.
    Gas-engine plant, 90, 93, 117, 125.
    Pumping station, 107, 113.
    Steam consumption, 103, 112, 113.
    Steam-turbine plant, 96, 110, 125.
Power-plant economy, *See* Power-plant, Gas-fired. Power-plant, Steel-mill.
Power transmission, *See* Rope drive.
Pyrite. War-time production, 643, 664, 665, 667.
Radiotelegraphy, 581.
    Aerial, 583, 606.
    Applications.
        Aeroplane use, 602.

Army use, 601.
Cable competition, 604.
Railroad use, 604.
Shipboard, 599.
Coherers, 596.
Government ownership, 605.
Heterodyne receiver, 598.
Radiodynamics, 606.
Radiators.
Continuous, 592.
High damping, 584.
Persistent, 587.
Quenched gap, 589.
Receivers, 596.
Transmitters, 584.
Wave length, 583, 607.
Radiotelegraphy and Radiotelephony, S. M. KINTNER, 581.
Radiotelephony, 595.
Rail design, 327, 489.
Ballast, 375, 499, 506, 519.
Crossties, 327, 329, 340, 343, 346, 355, 489, 509, 511, 513.
Effect of locomotives, 349, 355, 499.
Life of rails, 499, 517.
Rail failures, 502, 514, 519.
Wheel contact, 333, 358, 366, 490.
Railway, *See* Baltimore & Ohio Railroad. Locomotives. Rail design. Track construction.
Railway track, *See* Rail design. Track construction.
RANKIN, H. H., Discussion of Rail design, 376.
RANKIN, H. H., Discussion of Schoolhouse design, 324.
RAPELYE, H. A., Discussion of Rope drive, 298.
RAYMER, A. R., Discussion of Rail design, 507.
Refrigeration, *See* Air drying, *under* Blast-furnace.
RENKIN, W. O., Discussion of Blast-furnace power-plants, 126.
REPPERT, C. M., Correspondence on Historic failures of masonry structures, 73.
REPPERT, C. M., Discussion of Streets, 259.
Retaining walls.
Hillside streets, 230.
See also Street improvement.
RICE, JOHN M., Discussion of Industrial housing, 632.
RICE, RICHARD H. AND MOSS, SANFORD A., *Blast Furnace and Steel Mill Power Plants*, 81.
RIDDLE, L. E., Discussion of Minerals, 661, 662, 664.
RIGBY, GEORGE A., Discussion of Rope drive, 299, 300.
Rope drive, 271.

ROWAN, W. R. C., Discussion of Schoolhouse design, 318, 320, 323, 324.
Safety. Schoolhouse construction, 312.
Schoolhouse design, 304.
    Acoustics, 321.
    Air-space, 306.
    Auditorium, 309.
    Classrooms, 308.
    Corridors, 308.
    Entrances and exits, 306, 313, 316.
    Heating and ventilation, 311, 318, 321.
    Height, 306, 315.
    Lighting, 311.
    Safety, 312.
    Stairways, 307, 316.
    Swimming pool, 310, 319.
    Toilet rooms, 310.
SCHWAN, GEORGE H., Discussion of Industrial housing, 627.
SHOVER, B. R., Discussion of Blast-furnace power-plants, 125, 126, 127.
Sidewalks, 225, 254, 259.
    See also Street improvement.
SIEBERT, HERMAN C., Discussion of Blast-furnace gas, 175, 183, 184.
SIEBERT, HERMAN C., Discussion of Boilers, 449.
SIEBERT, HERMAN C., Discussion of Heating furnaces, 149.
Situation in Regard to Manganese, Sulphur, Pyrite, and Some Other War Minerals, J. E. JOHNSON, JR., 643.
Slab-heating furnaces, *See* Heating furnaces.
SMITH, W. H., Discussion of Heating furnaces, 160.
Smoke abatement.
    Heating furnaces, 131.
    Ringelmann scale, 145, 163.
SNYDER, G. W., Discussion of Rail design, 501, 508, 509.
SNYDER, W. E., Discussion of Heating furnaces, 142.
SNYDER, W. E., Discussion of Rail design, 364.
SNYDER, W. E., Discussion of Window glass machine, 25.
Soaking pits, *See* Heating furnaces.
Some Fundamentals of Schoolhouse Design, C. L. WOOLDRIDGE, 304.
SPELLER, F. N., Discussion of Minerals, 660.
SPRAGUE, N. S., *Important Features Relating to the Design and Improvement of City Streets*, 205.
Stair construction. Schoolhouse, 307, 316.
Steam boilers, *See* Boilers.
Steel-mill power-plant, *See* Power-plant, Steel mill.
STIMSON, EARL, *History of the Development of Rail on the Baltimore & Ohio Railroad*, 379.
STORER, N. W., Discussion of Rail design, 499, 500, 501.

Street improvement, 205.
Arrangement, 215, 219, 249.
Asphalt pavement, 238, 260.
Assessments for benefits and damages, 210, 251, 261, 268.
Bituminous concrete, 238.
Brick, 242.
Concrete, 243, 254.
Condemnation of property, 214.
Construction, 245.
Contracts, 244.
Curb, 258.
Drainage, 227, 253, 259.
Foundations, 228, 241, 269.
Grades, 221, 267.
Laws, Pittsburgh, 207.
Macadam, 238.
Maintenance, 247.
Materials, 235, 245.
Railway tracks, 231, 252, 261.
Retaining walls, 230.
Sidewalks, 225, 254, 259.
Standards, 223.
Substructure, 233.
Traffic, 218.
Width, *See* Arrangement.
Wood block, 240.
Structural materials, *See* Brick. Concrete. Housing, Industrial. Lime, Hydrated. Masonry. Timber.
Stucco, *See* Lime, Hydrated.
STUCKI, A., Discussion of Window glass machine, 23, 26, 27.
Sulphur. War-time production, 643, 660, 665.
Swimming pool. School, 310, 319,.
TALBOT, KENNETH H., Correspondence on Historic failures of masonry structures, 63.
TALBOT, KENNETH H., Discussion of Industrial housing, 633.
TALBOT, KENNETH H., Discussion of Lime, 476.
TALBOT, KENNETH H., Discussion of Streets, 252.
TAYLOR, S. A., Discussion of Rail design, 375.
Temperatures.
Air drying for blast-furnace, 200.
Blast-furnace gas, 179, 185, 195, 198.
Gas-fired furnace, 450, 455.
Heating furnaces, 133, 135, 145, 151, 152, 159.
THAYER, HORACE R., Discussion of Lime, 480.
THAYER, HORACE R., Discussion of Schoolhouse design, 317, 323.

THAYER, HORACE R., *Historic Failures of Masonry Structures*, 31.
THOMPSON, —, Discussion of Rail design, 376.
Timber. Limitations as structural material, 53.
Tin-alloy castings, *See* Die-castings.
TOPICAL DISCUSSION, *Burning Blast Furnace Gas under Boilers*, 167.
TOPICAL DISCUSSION, *Possibilities of Smokeless Operation of Heating Furnaces and Soaking Pits*, 131.
Track construction, Railway, 327.
Ballast, 375.
History, 379.
See also Rail design.
Track construction. Street railway, 231, 252, 261.
TRINKS, WILLIBALD, Discussion of Blast-furnace power-plants, 128.
TRINKS, WILLIBALD, Discussion of Condensers, 571.
TRINKS, WILLIBALD, Discussion of Rope drive, 296.
TURNBULL, THOMAS, JR., Discussion of Boilers, 443.
TURNER, C. A. P., Correspondence on Historic failures of masonry structures, 60.
UNGER, J. S., Discussion of Blast-furnace power-plants, 129.
UNGER, J. S., Discussion of Heating furnaces, 134.
VAUGHAN, G. W., Discussion of Rail design, 347, 509.
Ventilation, Schoolhouse, 311, 318, 321.
Waterproofing, *See* Concrete.
WELDIN, WILLIAM ARCHIE, Correspondence on Historic failures of masonry structures, 76.
Wheel Contacts on Railheads, GEORGE H. BARBOUR, 489.
WHITED, WILLIS, Correspondence on Historic failures of masonry structures, 54.
WILCOX, F. H., Discussion of Blast-furnace gas, 188.
WILSON, R. L., Discussion of Industrial housing, 631.
Window Glass Machine, ROBERT LINTON, 1.
Window glass manufacture, 1.
Breakage due to vibration, 26, 29.
Composition, 4.
Furnace, 4.
Machine vs. "hand" blowing, 13, 21, 24, 30.
Temperatures, 5, 11.
Wages of workers, 4.
Wireless telegraphy, *See* Radiotelegraphy.
Wireless telephony, *See* Radiotelephony.
WOOLDRIDGE, C. L., *Some Fundamentals of Schoolhouse Design*, 304.
Zinc-alloy castings, *See* Die-castings.

THE WINDOW GLASS MACHINE

By Robert Linton*

There are two kinds of transparent sheet glass, termed commercially plate glass and window glass, manufactured by two radically different operations. In making the former, a quantity of molten glass is poured upon a casting table and rolled out in a sheet which is placed in a kiln where it is annealed and cooled. The sheet produced in this way is rough, as the metal table and roller, no matter how smooth, will leave an impression on the soft glass, consequently it has to be ground down to a plane surface on both sides and then polished in order to render the surface smooth and the sheet transparent. Window glass is made by blowing or drawing a cylinder in such manner that nothing but air comes in contact with the surfaces during the operation, cutting open the cylinder longitudinally, reheating it, and flattening it out in a sheet which is then annealed.

Glass blowing is an art that runs back into antiquity—no one knows how far. A book on glassmaking published in Leipsic in 1689 that I have in my library contains an interesting illustration of glass blowers at work in a factory of that period. A writer as long ago as the eleventh century has described in considerable detail the blowing of glass cylinders and their subsequent flattening into sheets, and there seems to be little doubt that cylinders were blown long before that time.

Prior to 1903 window glass was made entirely by hand, and there is still about 40% of the production of this country manufactured by this method. A brief description may therefore be of interest and aid in making clear the difficulties involved in devising apparatus to do the work mechanically.

The tool used is the blower's pipe, about five feet long, with a mouth piece on one end, and on the other, the bell-shaped wrought iron "pipe head." The workmen are the blower, gatherer and snapper, or blower's helper, the three men constituting a "Shop." The gatherer starts the operation by dipping the

*Consulting Mining Engineer, 525 Penn Ave., Pittsburgh.

glass which adheres and forms a small ball. He blows through pipe head, which has been previously heated, into the molten the pipe sufficiently to expel the soft glass from the interior and form a small bubble in the ball. The glass is then cooled to the proper stiffness, more glass gathered and the operation repeated until there is sufficient glass to yield a cylinder of the desired size. For an ordinary cylinder the gatherer usually gathers five times.

The lump, which is in a state of rather stiff plasticity, is then carried to the "blower's block," an iron mold set in water to keep it from becoming too hot, and lined with charcoal to prevent the glass from being marked by contact with the iron. By turning the ball in the block, blowing air into the lump through the pipe and drawing it up towards him, the blower so manipulates the operation as to form a pear-shaped ball, the upper part of which has the diameter and thickness of the cylinder to be produced, the bottom containing a thick mass of glass that has now become quite stiff. The ball is now reheated in a "blow furnace" and when soft enough, the blower swings it out in a "swing hole" alongside the blow furnace. The weight of the glass elongates the cylinder and the blower keeps

Fig. 1. Blowing window glass cylinders by hand.

it distended to proper diameter by intermittently blowing air into it through the pipe. The reheating and swinging out is repeated until the glass in the closed end of the cylinder is of the same thickness as the other parts. This closed end is now exposed to the heat of the blow furnace, the workman at the same time blowing into the pipe and keeping the air confined by holding his thumb over the mouth piece. The glass in the end softens, and the heat at the same time expands the air in the cylinder, which finally bursts out through the end. The open end is heated still further and swung out into the swing hole in such manner as to make it cylindrical to the end. The pipe is removed by touching a cold iron to the glass just below the pipe head, and the pear-shaped cap removed by stretching a thread of hot glass around the cylinder, allowing it to remain until a heated streak is formed, and touching this streak with a cold iron causes the cap to snap off. The cylinder is split by passing a hot iron back and forth through the cylinder to produce a similar line of heat and touching it at one end with a cold iron, which results in a straight crack from end to end.

The cracked open cylinder is then carried to a flattening oven. It is laid on an iron carriage and pushed into the oven, where it is heated, lifted with an iron tool from the carriage and laid on the flattening stone—a large, flat fire clay tile with a carefully levelled and highly polished surface. As the glass softens the cylinder is spread out and then rubbed down flat with a wooden block mounted on a light steel bar. The stone with the sheet lying on it is then moved out of the flattening compartment into a cooler one, the sheet is gradually cooled down and when it is sufficiently hardened, it is lifted by means of a fork with smooth steel tines and laid on a conveyor which carries it slowly out of the oven. This part of the oven, called the "lehr," is for the purpose of annealing the glass by cooling it slowly and gradually, for otherwise it would be too brittle for commercial use. The ordinary type of flattening oven has four flattening stones set on a circular table—the "wheel"—which is carried on a vertical shaft turned by hand from a bevel gear drive.

It will be readily appreciated that blowing window glass

requires unusual judgment and manual skill, as well as more than ordinary physical strength and endurance; also that the size and thickness of sheets that can be produced by hand is quite limited. In single strength (1/12 inch thick) the limit is about 14 in. diam. by 60 in. long; in double strength (1/8 inch thick) about 19 in. diam. by 70 in. long. The workers were extremely well paid. Blowers' wages ordinarily varied from about $150 to $250 per four weeks, and gatherers' from about $110 to $150. Blowers who made the largest sizes were paid much more than this; I remember one "big blower" in a factory with which I was connected who earned $642 in four weeks.

Window glass is a mixture of silicates of lime and soda. The raw materials are silica sand, limestone and salt cake (sulphate of soda) or soda ash (carbonate of soda). The mixture of these raw materials is called the "batch."

A characteristic analysis of window glass is as follows:

SiO_2	72.50
CaO	12.60
Na_2O	13.67
MgO	0.22
Al_2O_3 Fe_2O_3	1.01
Specific Gravity	2.52

Regenerative tank furnaces are now almost universally employed for window glass melting. A tank furnace consists of a long, rectangular hearth or "tank" constructed of massive fire clay blocks and kept filled with molten glass. The firing is through ports in side walls above the blocks, the flame sweeping across between the glass level and the crown from the end where the batch is filled in to a point usually slightly more than half way to the working end. The batch floats on the surface of the glass bath, exposed to the heat of the fire above and the molten glass below, and is gradually melted, refined and cooled to proper consistency as it is drawn down by the continuous working out of the glass at the other end. The temperature of the melting end is about 2600° Fahr., and at the working end about 2150-2250° Fahr. in machine plants.

Glass does not have a definite melting point in the sense of a fixed temperature at which it passes from a solid to a liquid state. Strips of window glass under test have showed a slight deflection at 840° Fahr., while they lost stiffness at 920° and bent freely at 980°. The glass becomes softer as more heat is applied and becomes entirely liquid, so as to assume readily the shape of a vessel into which it is poured, at about 1700°. With the application of still more heat the glass becomes of course more and more fluid until finally a point is reached where a slight decomposition and loss of alkali takes place, which manifests itself by bubbles of gas rising through the heated mass.

The viscosity of molten glass necessarily varies with the temperature, this being a natural law of liquids. Cohesion is strong, but weaker than force of adhesion to heated substances such as iron or clay. This gradual increase of viscosity with drop of temperature is an important factor in the manufacture of glass by blowing or drawing. The cooler the glass, the stronger is the cohesion of the molecules, and the greater will be the force required to draw the mass out, until at last the glass may become so stiff that the cylinder being drawn will not retain its form and becomes distorted and shapeless.

Liquid glass has a high surface tension at the temperature at which it is worked. In machine operations the glass is supplied to the pot or forehearth from which the cylinder is drawn hotter and therefore more fluid than is suitable for working. To bring it to the proper consistency, it is cooled by radiation and convection, either simply by exposure to the air, or by using a water chilled ring. The radiation of heat from the surface is much more rapid than the conduction of heat through the glass, and the result is a gradual cooling from the surface down, and a mass of glass with gradually decreasing viscosity from the surface down. In drawing a cylinder from such a bath of glass, the portion outside the cylinder has a greater surface tension than the portion inside, as it is slightly cooler.

The important temperatures in window glass manufacture are the working temperature of the glass—about 1500° in hand blowing and 1750° in machine blowing—and the "setting temperature," or the temperature at which glass retains its form,

which is about 850°. In the liquid state in which glass is worked in machine operations, it is so soft as to be extremely sensitive to changes in temperature or variations in exterior or interior pressure exerted at the point of draw.

When glass is cooled rapidly from the liquid or plastic state to the setting point, cooling strains develop between the surfaces and the interior of the walls of the cylinder. This is because glass in the solid state is extremely hard and non-compressible. In cooling, the surfaces harden first and the soft mass in the interior readily adjusts itself to their contraction; then the interior hardens, but as there can now be no further yielding of the hardened surface layers, the molecules are left in a condition of tension, and the more rapid the cooling, the higher the tension developed. This condition facilitates the capping-off and cracking open of the cylinders; it is to remove the strains and reduce the brittleness that glass is annealed.

Somewhere around 1896 John H. Lubbers, a window glass flattener by trade, began experimenting with a machine to make glass cylinders. He was a man of unusual natural ability and in working at his trade he had acquired a general practical knowledge of the physical properties of glass to which reference has been made above. He believed that he had devised a practicable method of drawing glass cylinders from a bath of molten glass, but being of limited means and realizing that considerable money would be required for his experiments he disclosed his proposed method to Mr. James A. Chambers, President of the Chambers Glass Company, in whose factory Lubbers was working, and one of the very ablest window glass manufacturers in this country. Mr. Chambers was much impressed with the practicability of Lubbers' proposed method, crude though the details must have been at that time, and advanced the necessary money to cover the cost of some preliminary experiments. Later a small company was formed, headed by Mr. Chambers, for the purpose of carrying out these experiments on a more extensive scale, for while Lubbers was actually making window glass cylinders, there were a great many difficulties still to be overcome in order to render his apparatus suitable for the manufacture of window glass in a commercial way. As a matter of fact it required

years of work and an enormous amount of money to develop the apparatus to the point where it was finally operated at a profit. Nevertheless the machine of to-day still retains the basic features of the Lubbers' inventions, and considering how completely they revolutionized the established processes of window glass manufacture, Lubbers' ideas, as set forth in his various patents, show a surprising knowledge of the essential conditions for making glass cylinders by machinery.

The experiments were conducted in a small plant located in Allegheny and it was here that the machine was operated that is shown in Fig. 2. There seems to be no doubt that this was the first machine that was ever successfully employed to make window glass cylinders.

The Lubbers' process is a process for drawing cylinders vertically from a bath of molten glass. This in itself was not a new idea, as several patents—one dating back as far as 1854—proposed this. Lubbers, however, was the first to devise a workable method for really doing it, a process that took into account the peculiar conditions involved in working molten glass, and apparatus that actually made glass cylinders—cylinders that were in every respect similar to those that were blown by hand.

In the drawing *A* is a flat bottomed, circular pot placed in a heated kiln and movable vertically as shown by the dotted lines; *B* is a circular water cooled shield; *C* is a cross-head travelling on guides, raised by means of a cable winding on a cylindrical drum and carrying a detachable blow pipe of the general type used in hand blowing; *D* is a supply pipe for the admission of air under sufficient pressure to keep the cylinder distended to proper diameter; *E* is a graduating valve which is automatically opened as the cross-head *C* is raised, the valve being provided with a slotted opening of proper size and shape to admit the requisite quantity of air at each point of draw; *F* is a gasometer serving to maintain a constant pressure in the supply line conveying air to the graduating valve.

The operation was as follows: The pot *A* was raised to the top of the kiln and the water shield placed in the position shown. A quantity of glass sufficient for drawing one cylinder was ladled into the pot. A ball of glass was gathered on a blow-

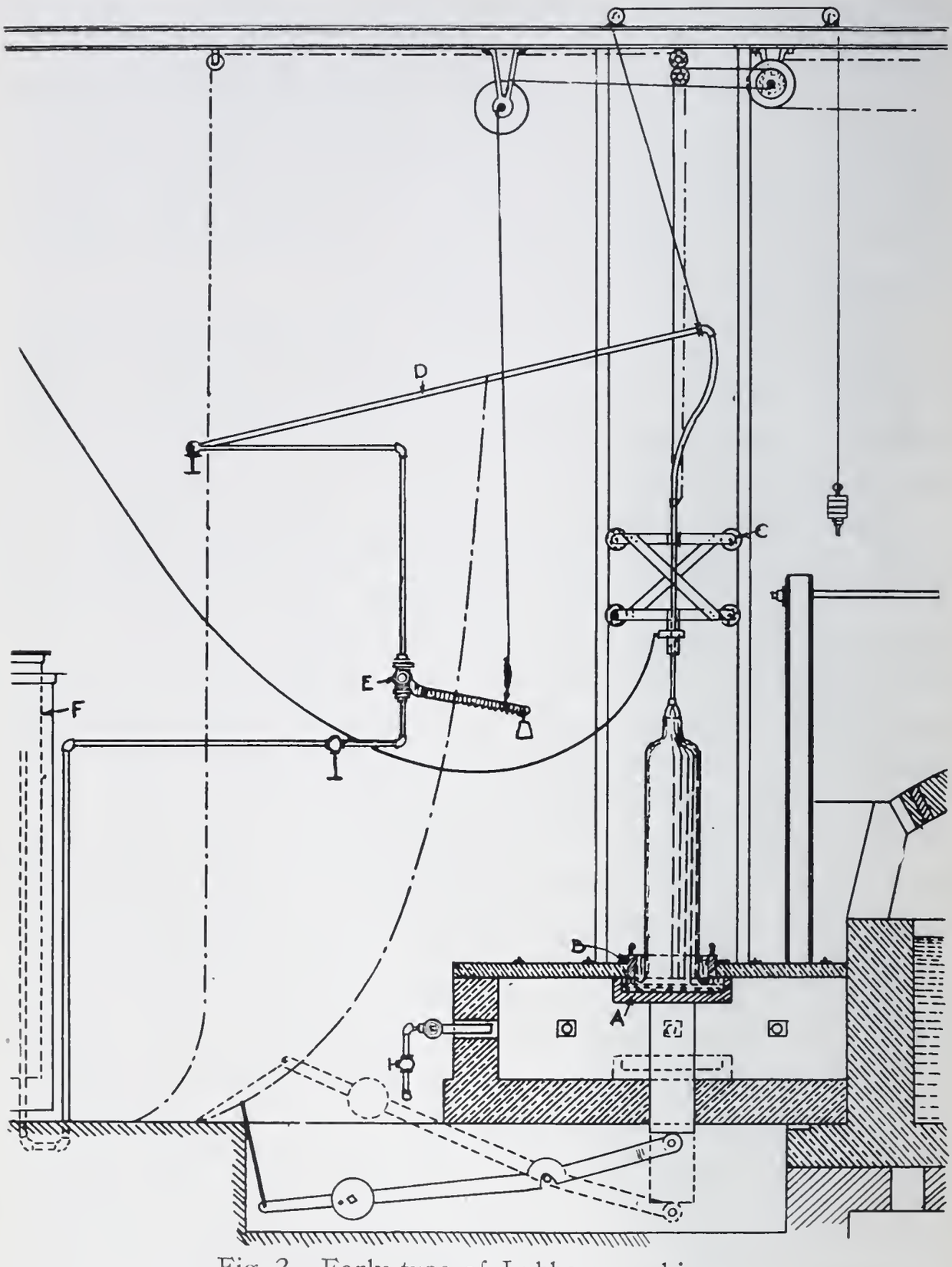

Fig. 2. Early type of Lubbers machine.

pipe, the small bubble blown out as described above in connection with hand blowing, and the ball "marvered," or rolled on a smooth iron plate, so as to thin the bottom portion beneath the bell-shaped end of the pipe; the pipe was hung on the cross-head and lowered into the glass. The cross-head was then

raised, air being admitted by the operation of the graduating valve, which swelled out the glass to the diameter of the cylinder to be drawn. The upward movement was then continued until the cylinder reached the desired length, the introduction of air being automatically regulated by the graduating valve. The cylinder was severed from the glass remaining in the pot in any one of several ways—either by dropping the pot and allowing the heat to melt the lower end, by shearing off, or by shutting off the air and continuing the upward movement, which contracted the lower end of the cylinder to a small cord which was sheared off. The pipe with cylinder attached was removed from the cross-head, lowered to a horizontal position, the pipe removed and the cylinder capped off as in hand blowing operations. The pot was lowered to the kiln to reheat it and melt to proper consistency the residue of glass that remained in it.

The control of the machine by the operator was at that time limited to stopping, starting or reversing the drum on which the cable wound that raised and lowered the cross-head, and in manipulating a hand valve on the air supply line between the gasometer and the graduating valve.

Cylinders were also drawn from a forehearth in the melting furnace itself. By this method the necessity of ladling was obviated, the glass flowing directly into portion of the furnace where it was sheltered from the heat sufficiently to give it the proper consistency for drawing.

The experiments were continued at Allegheny until the spring of 1902 when the factory of the American Window Glass Company at Alexandria, Indiana, was leased to Lubbers and the work was transferred there from Allegheny. There was a 54-blower continuous tank furnace at this plant, with all accessory flattening and other equipment for this capacity, and the machine installation was designed with a view to testing it out on a practical working scale, and to developing it as rapidly as possible to the point where it could be utilized in the plants of the American Window Glass Company. Material advancement was made, especially in the way of designing mechanical features, but the development of the machine to the point of making the necessary output, quality and cost was still far off.

However, nine of the largest factories of the American Window Glass Company were equipped with machines the following year. The company had been experiencing a serious and constantly growing shortage of blowers, due to the fact that there was a limited number of these skilled men in the country and because the plant capacity of the country had been rapidly expanding. Many independent companies, operating at a low fuel cost, offered high guarantees in wages to good blowers, and many blowers had organized co-operative companies. So that very strong reasons existed for pushing as rapidly as possible the development of the machine process, and it no doubt seemed reasonable to assume that this development would be very much hastened, if the machines were installed in these plants, manned as they were with the most efficient operating organizations of the company. With such a force of practical glass makers giving thought and effort to the problems, it would naturally be expected that the difficulties that stood in the way of success would be overcome in the shortest possible time.

As a matter of fact, however, they proved more serious than was appreciated, and the work of developing and improving the various parts of the apparatus continued for about two years longer, before satisfactory results began to be obtained.

The record of the work done in these years of experimenting and development is a most interesting story, but it would be beyond the scope of this paper to give more than a very general account of it. Out of the crude apparatus shown in Fig. 1 was perfected a machine that is producing to-day results far beyond the most optimistic expectations of its inventor. One by one the causes of the troubles were located and the apparatus modified or adjusted to correct them.

That this work was so slow and so difficult was largely due to two facts which have been mentioned above, viz: First, that in the liquid state in which glass is worked in machine operations, it is so soft as to be extremely sensitive to changes in temperature or variations in exterior or interior pressure exerted at the point of draw; and second, that in working glass, cooling strains develop as the glass passes from the liquid to the solid state, causing brittleness.

The work may be divided into five general heads:

1. Adjusting the character and temperature of the glass bath to the requirements of drawing operations.

2. Increasing the size of the cylinders.

3. Closer regulation of the air supplied to the interior of the cylinder.

4. Better regulation of the drawing speed.

5. Handling the cylinder after completing the draw.

Adjusting the character and temperature of the glass bath to the requirements of drawing operations: The method of reheating the residue remaining in the pot after drawing a cylinder and then ladling fresh glass into the pot was not very satisfactory. It was difficult to get good quality of glass, for unless the glass in the pot and that which was ladled into it were heated to the same temperature and brought to a very fluid condition, they would not mix properly, and thus produce streaks in the cylinder. Similar difficulty was experienced in melting back the residues in the forehearth; if the glass was heated hot enough and skimmed when necessary in the manner employed in skimming the gatherers' rings in hand operation, the quality was satisfactory, but the operation was very slow.

It was then proposed to drain the pot between draws, and to accomplish this a furnace was built with four pots mounted on a turn table and so arranged that each pot would be tilted at a certain point. In this way there would always be one pot used for drawing cylinders while the others would be heating and draining. An improvement on this apparatus was the double reversible pot mounted on trunnions shown in Fig. 3 (invented by L. A. Thornburg) in using which one side was always being drained while a cylinder was being drawn from the glass in the other. When the Gas City plant was equipped it was necessary to decide which of the three forms of apparatus would be adopted, and the Thornburg reversible pot was chosen as being best suited to the operations as they were conducted at that time. It is still used by the American Window Glass Company and it is doubtful if any other form of receptacle for the molten glass can equal it for high output and economical operation.

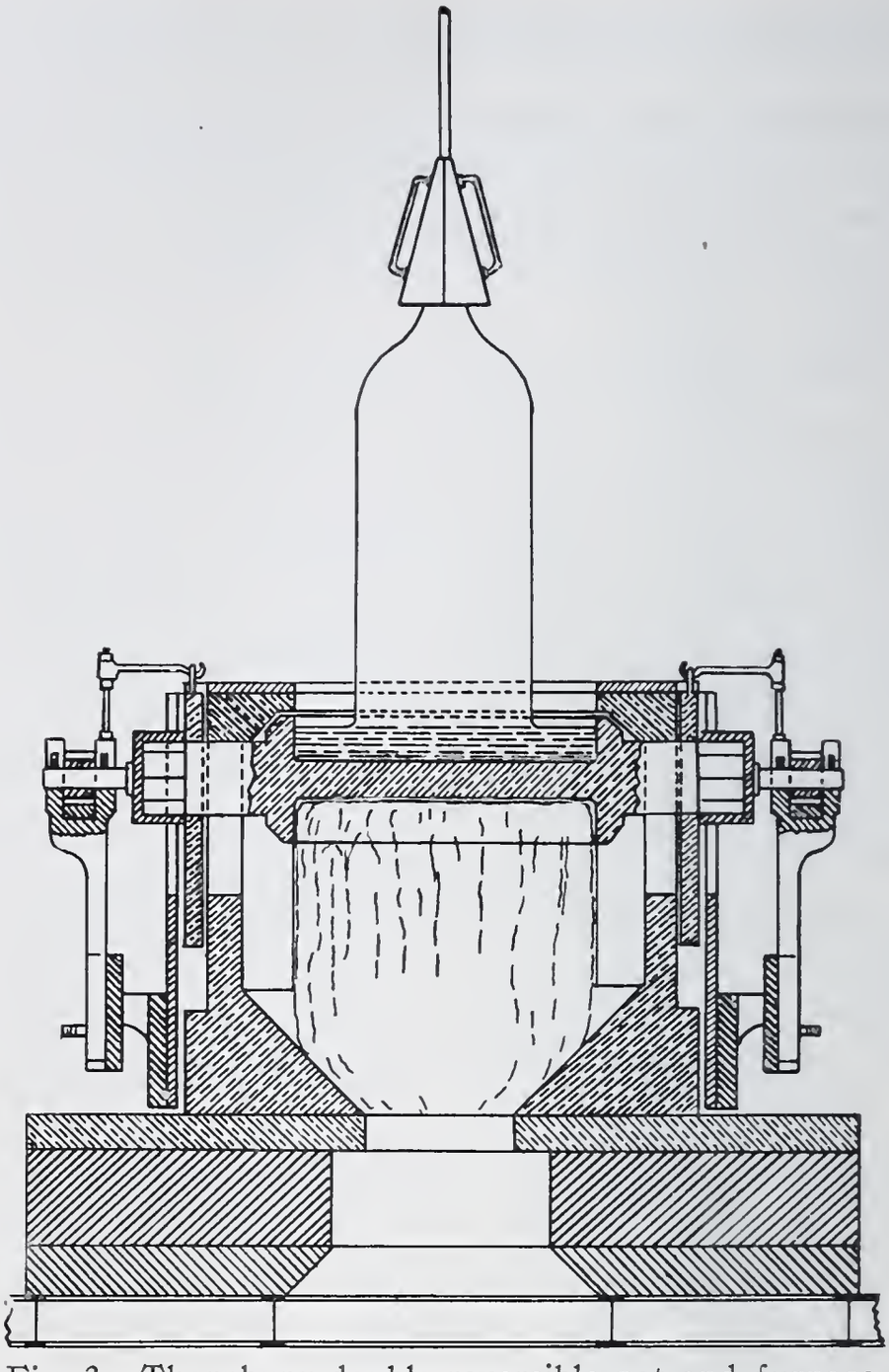

Fig. 3. Thornburg double-reversible pot and furnace.

It was also discovered that there was gradual cooling of the glass during the draw, and that it was important to control this so as to prevent one side from cooling more rapidly than the other as far as could be done. The effect of inequalities in the temperature of the bath is to produce "thick and thin" glass i. e., that portion of the circumference of the cylinder where the glass is coolest at the point of draw will always always be the thickest; also in many cases this inequality in temperature causes the cylinder to travel towards one side of the pot instead of continuing to draw vertically from the starting position. A

great deal of difficulty was experienced in eliminating this "thick and thin" glass, as it could be due to a number of causes. More positive adjustment of the machinery, an improved type of ladle and method of lading the glass from the tanks to the pots, more care in keeping the pots uniformly heated, and shielding the glass bath from draughts, very greatly reduced the proportion of "thick and thin" glass produced. It was, however, found so difficult to maintain absolute uniformity in the temperature and rate of cooling of the bath, that the practice was finally adopted of drawing from the center of average viscosity, instead of from the center of the pot. In other words, when the glass in a place is thick and thin, and the apparatus is in proper condition, the blow pipe is simply moved sufficiently to bring the thickness uniform or practically so for the entire circumference of the cylinder.

It was thought in the early days of machine operations that some change in the chemical composition of the glass, or in the character of the materials from which it was made, would be necessary in order to adapt it to the new working conditions. The cylinder was now being drawn from glass in a liquid condition, while the hand blower manipulated a lump sufficiently stiff to be retained on the end of the blow pipe. The glass was worked out of the tank much more rapidly, which accelerated the flow proportionately. Considerable experimenting was done with various mixtures and various kinds of materials, but in the end it was found that the chemical composition that gave the best glass under hand operations was also the best for machine operations. The increased draw on the tanks necessitated, however, alterations in the melting furnaces and the tanks of the American Window Glass Company so remodeled have yielded quite remarkable results. The maximum amount of glass gathered in 24 hours from one of these under hand operations was 3.7% of the total contents of the tank, while under machine operations more than 20% has been ladled from the same tank in 24 hours.

Increasing the size of the cylinders: The original Lubbers' machine, as has been above stated, made a cylinder about the size of a hand blown cylinder. It soon became obvious that production could be very materially increased by ladling a larger quantity of glass into the pot, and drawing a longer cylinder which

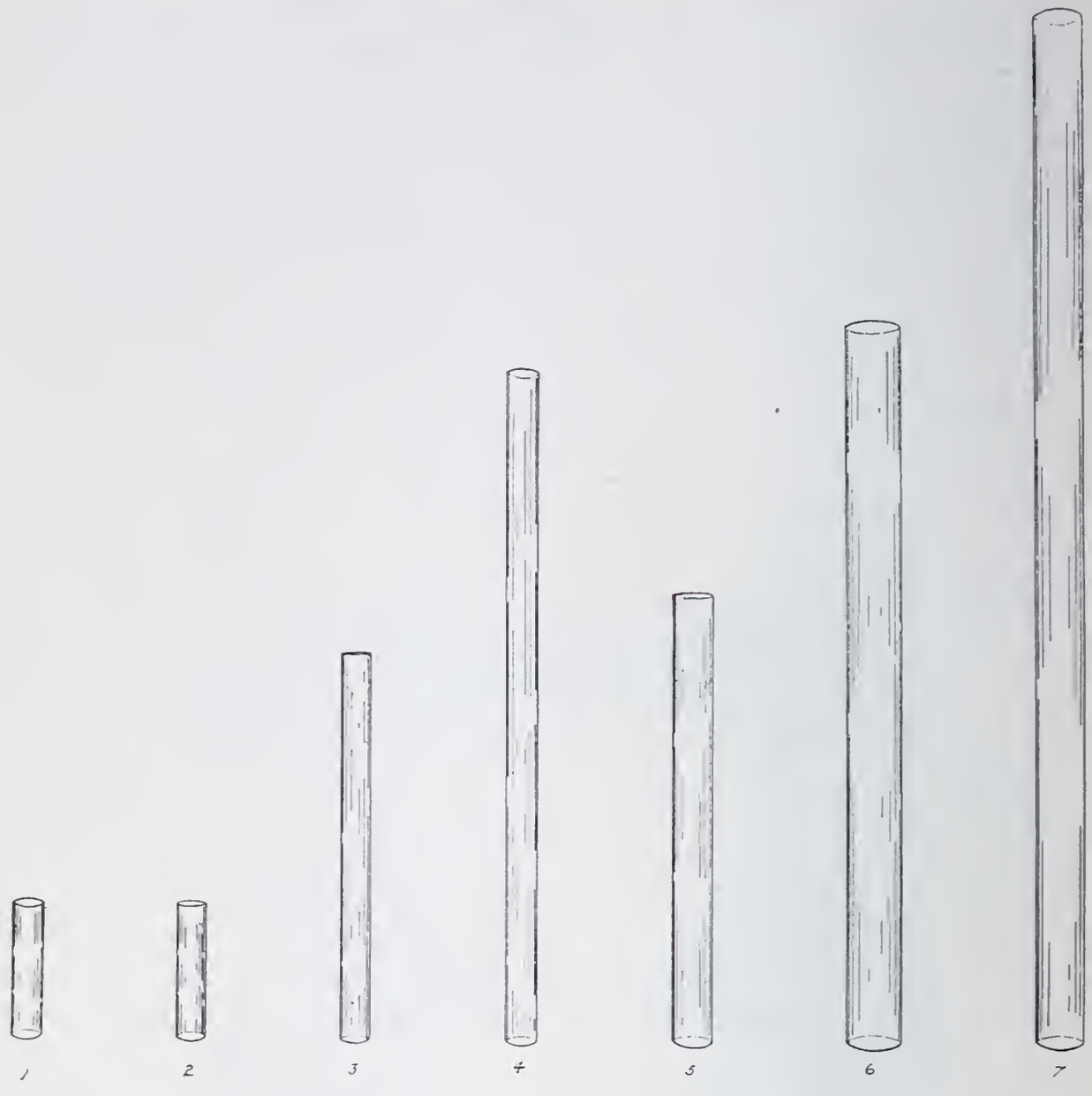

Fig. 4.

could be cut up, after lowering, into lengths suitable for flattening. This introduced complications in the control of drawing speed and air supply which will be discussed farther on, but eventually the point was reached where five flattening lengths about 14 in. in diameter by 60 inches long could be produced at one draw.

The cylinders were at first capped off and severed into flattening lengths by using a hot glass thread; this, however, proved too slow and cumbersome for commercial operations, and an appliance was devised by which the heated streak was produced by passing an electric current through a resistance wire held in contact with the cylinder. After a long period of experimental

PENNSYLVANIA STATE LIBRARY

work, this method was finally adapted satisfactorily to the operation and has been in general use ever since.

The next step—and a most important one in increasing production—was to increase the diameter of the cylinder. It was not possible to flatten a single strength cylinder that was much larger than the standard size of 14 in. in diameter by 60 inches long. It was suggested, however, that there would not be any difficulty in flattening, if the dimensions would be reversed, and flattening lengths produced which would be 19 in. diameter by 42 inches long, employing of course pots of larger diameter and containing a larger quantity of glass. This method was tried out and proved so successful that it was immediately adopted in all the factories operating machines. The size of the cylinders has since then been considerably increased, so that to-day, using a 36 in. pot, single strength cylinders are made up to 21 in. diameter by 460 in. long, and double strength up to 24 in. in diameter by 320 in. long. Fig. 4 shows the steps in the development of the size of the cylinder from that made from Lubbers' first machine to that made at present.

Closer regulation of the air supplied to the interior of the cylinder: Lubbers had discovered three fundamental facts in his earliest experiments: First, that the air supply must be held at constant pressure; second, that unless the quantity of air supplied to the interior of the cylinder was constantly and uniformly increased during the drawing operation, the cylinder would taper off to a point; and third, that no ordinary type of hand-manipulated valve on the air inlet line would regulate the increase delicately enough. We have seen how these conditions were provided for by using a gasometer for regulating the air pressure and the special automatic graduating valve for controlling the rate of increase of the air supply.

As the length of the cylinders was increased, another complication entered. It was found that even with the graduating valve opening and increasing with automatic precision the amount of air entering the cylinder, the pressure at the point of draw was not constant, but was applied in a series of surges which produced corrugations in the cylinder, termed "pulsations." For the purpose of better understanding the cause of these, let us

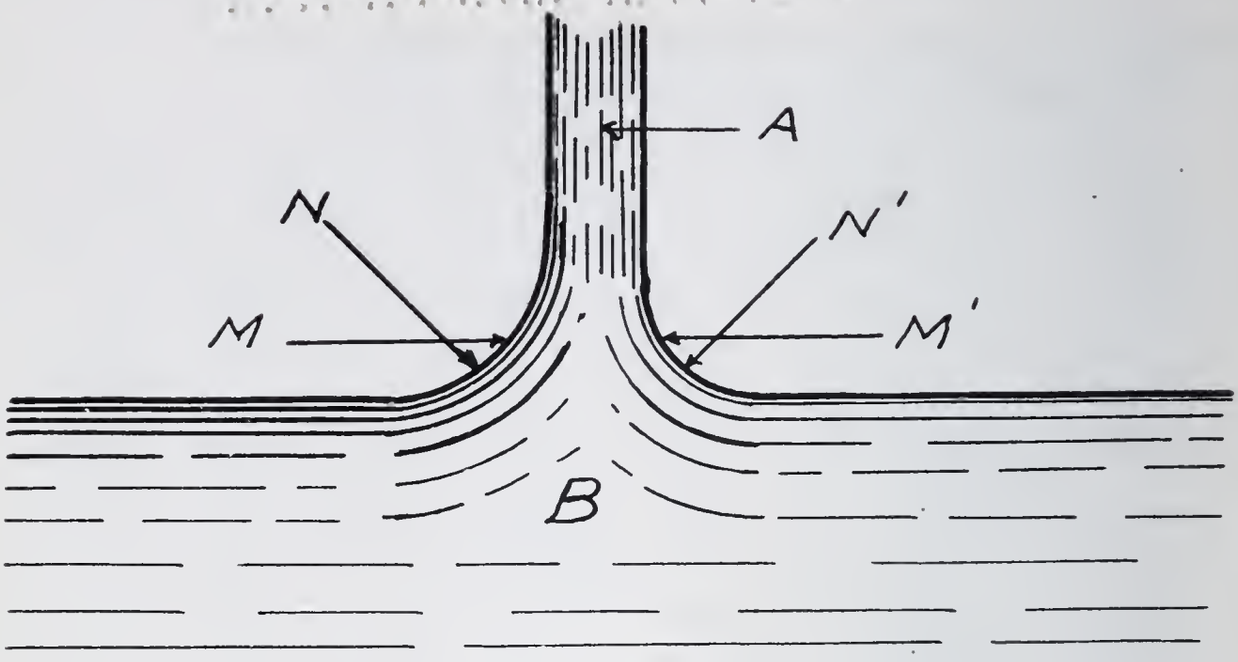

Fig. 5.

consider the condition of the glass at the point of draw, and some of the factors affecting the air pressure inside the cylinder.

In Fig. 5, A represents the wall of a cylinder being drawn from the bath of liquid glass B. The surface tension of the glass in the meniscus outside of the cylinder is N, and N' the surface tension of the meniscus inside the cylinder. Now N will always be greater that N', because the surface of the glass in the pot outside of the cylinder cools by free radiation and convection in the atmosphere, while the surface of the glass inside cools by radiation through the cylinder and convection currents set up by what air is confined within the cylinder. The difference is doubtless very slight at the beginning of the draw, but increases gradually as the draw progresses. Now since N is greater than N', the wall of the cylinder will be gradually pushed over towards N', unless held out by pressure. If we call M and M' the horizontal components of the force due to surface tension on the outside and inside of the cylinder respectively, then $M - M'$ will be the force that tends to contract the cylinder. If P is the air pressure introduced, then

$$M - M' = P$$

As $M - M'$ is constantly increasing, the pressure must be increased in the same proportion, if the cylinder is to be held to a uniform diameter.

Several factors, however, affect this pressure. Among these are the following:

1. Factors that produce or increase pressure:
   - Air admitted under pressure through the graduating valve.
   - Expansion due to heating the air by the hot glass in the cylinder and pot.
   - Expansion of water vapor in suspension.
2. Factors that reduce pressure:
   - Elongation of the cylinder.
   - Cooling of heated air currents that rise through the cylinder.
   - Lowering of average temperature of the air contained in the cylinder.

It will be seen that here are several opposing factors, and factors impossible to control, especially when we consider that the average pressure maintained in the cylinder during the draw is not much over a quarter of an ounce. The practical effect was the formation of pulsations referred to above. Why or how the air develops this pulsating or breathing flow is not even yet understood; however, Lubbers devised a means for overcoming the trouble sufficiently to meet the requirements of practical operations. That was to introduce an excess of blowing air and then allow a portion of it to escape through a vent hole. With the discovery of this principle, Lubbers completed the devising of a system of air control that stands to-day unchanged except in perfecting and applying improved mechanical details required by the huge cylinders now being drawn.

Better regulation of the drawing speed: In the first Lubbers' machine there was no variation in the speed of the cross-head that carried the blow-pipe. It was not long until the practice of gathering a ball of glass on the blow-pipe was abandoned, and the pipe lowered directly into the glass, and when this was done it was found necessary to vary the speeds. Three speeds were used at first—one to form the neck, one for the cap, and one for the body of the cylinder. This was later changed so as to use one speed for the neck and cap, one for the body of the cylinder, and one to thin the lower end for shearing off.

It was also observed that the glass in the pot was gradually cooling as the drawing progressed, and therefore the walls of the cylinder were gradually thickening. The speed was there-

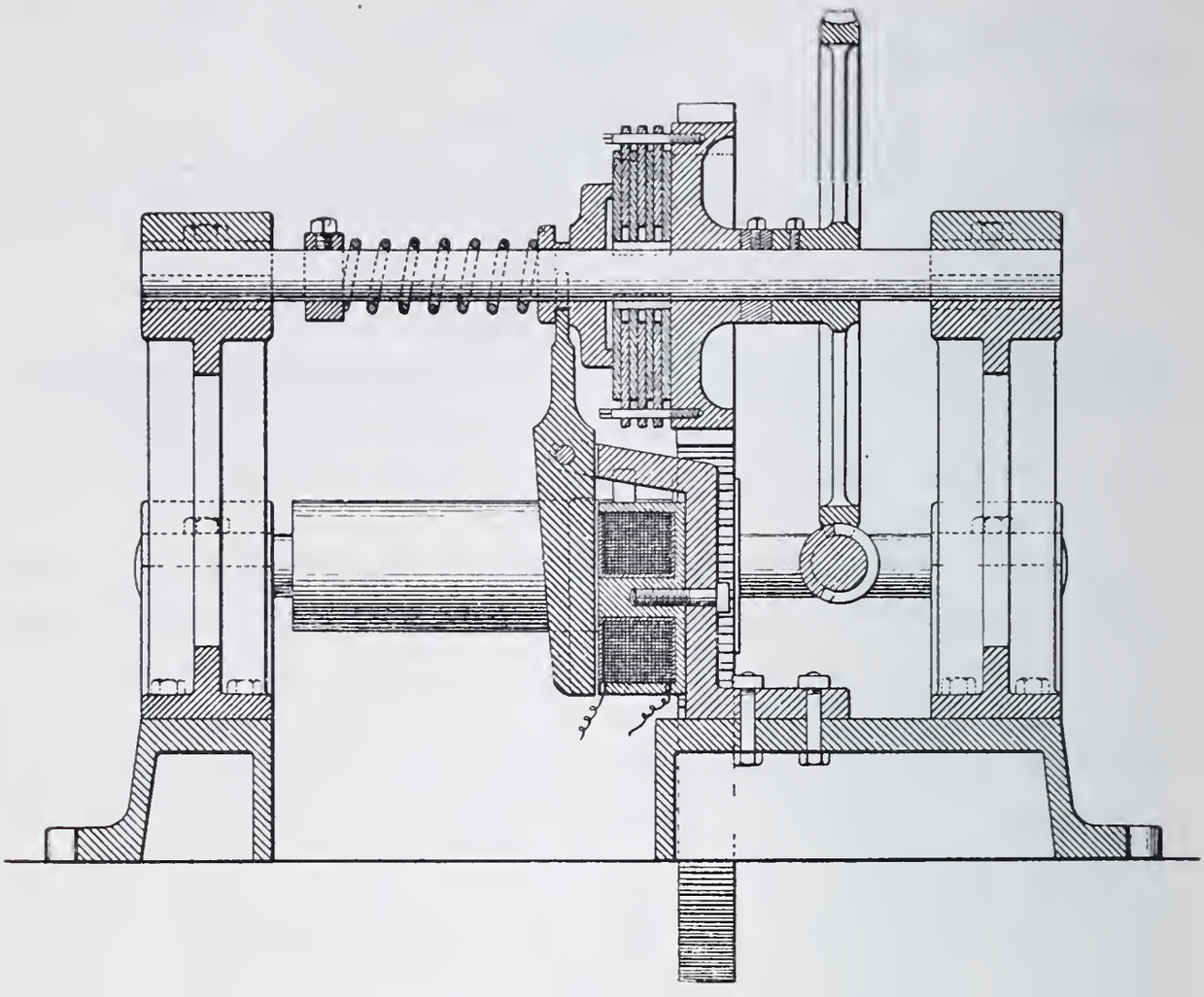

Fig. 6. Section of geared hoist with magnetic clutch control.

fore gradually increased, the increase being adjusted so as to compensate for the increasing viscosity of the cooling glass, and thus produce a cylinder of even thickness longitudinally.

Two factors control the thickness of the glass in a cylinder, first, the viscosity of the glass—governed by its temperature, and second, the speed of draw. The same thickness may be drawn from glass of different temperatures, if the speed is regulated to compensate for the variations in viscosity. The problem is, however, complicated by the necessity of drawing glass of even thickness around the entire circumference, by the necessity of preventing excessive cooling strains, and of avoiding loss of time as far as possible. In early operations there was considerable difficulty in keeping the thickness of the product up to standard single strength, and there was quite a little loss due to the production of thin glass that could not be marketed. As the machine became perfected, it was not only possible to pro-

duce good, standard single strength, but double strength and heavier grades as well, up to 3/16 inch.

Several types of mechanism for raising the cross-head were tried—the one finally adopted being a motor driven-geared hoist. This was provided with a friction clutch held in position by a strong spring; an electro-magnet was used to release the clutch so that the cross-head could be lowered after the draw. This type of hoist is shown in Fig. 6. The three speeds were first provided by driving the motor with current at three voltages—15, 60 and 220—and the increase of speed during the draw was provided for, first by using a conical winding drum for the cross-head cable, later by using a series of graded resistances on the 60-volt, or drawing circuit. Finally a standard hoist was adopted that used only one voltage up to the point of thinning the cylinder to sever it from the glass in the pot, and provided with a special drum on which the cable travels over an irregular spiral so designed as to impart the necessary changes in speed of vertical travel to the cross-head carrying the pipe.

Handling the Cylinder after completing the draw: In the early Lubbers' apparatus there was a cord attached to the blow-pipe during the draw, this cord passing through an overhead pulley. After the draw was completed the pipe with the cylinder attached was detached from the cross-head by pulling this cord and lowering, while still attached to the cord, to a horizontal position. The hoist with the magnetic clutch control made it possible to lower the cylinder by simply swinging out the lower end, using curved supports, "taking down hooks," to support it, and slowly lowering the cross-head at the same time, on which the pipe and cylinder still remained suspended. This was hard and dangerous work for the men who handled the taking down hooks, and considerable experimenting was done with a view to providing apparatus for taking down the cylinders mechanically. The device that was finally adopted and which is now in general use is shown in Fig. 7, and has proved a very simple and safe means of handling the heavy cylinders now being made.

This brief outline gives a very inadequate idea of the immense amount of study and research expended on the various problems involved, and the numerous alterations in the mechan-

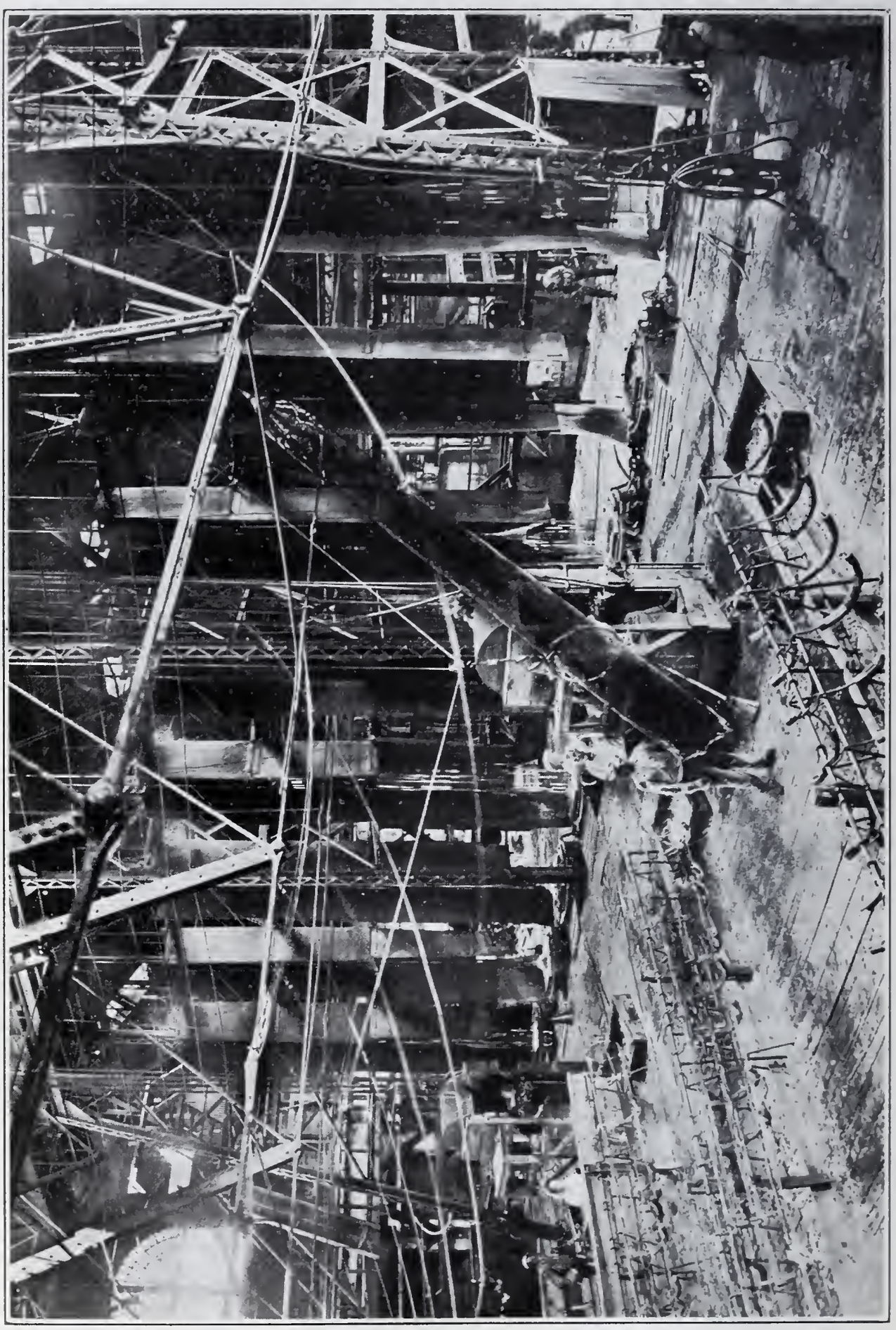

Fig. 7. Window glass machines in operation.

ical deails that were found to be necessary while the machine was being developed and conditions of machine operation determined. It was a tedious and difficult task, but one by one the difficulties were overcome until finally machine operation attained such a degree of success as to dominate the window glass business of this country and has reached out to new fields abroad.

Lubbers' first type of machine, as has already been stated, made cylinders similar in size and workmanship to those which the single strength hand blowers were making at that time. A present day machine draws cylinders which are over twelve times as large, working with the precision and regularity that can only be obtained by mechanical operation.

Machine operation has immensely increased the output per tank and output per man in the blowing room. The machine blower, operating four machines, displaces on an average eight hand blowers, and not only this, he produces a great deal more glass than the eight hand blowers could possibly make. The whole labor force of a present day machine blowing room is less than half the labor force in the blowing room of a hand operated plant. Under hand operation a tank furnace was rated as so many blowers' capacity. A 48-blower tank, for instance, was a tank designed to melt sufficient glass to supply 16 blowers on each of the three working shifts; it was estimated that if the blowers all worked to the limit of capacity fixed by union rules it was as much glass as the tank would melt. The same tanks after being remodeled—not enlarged, or only slightly enlarged—have yielded an output in finished glass that has shattered all records in hand blown operation, and completely upset all previous ideas of tank capacity.

Not only in point of capacity, but as regards quality of product as well, has the machine scored a remarkable success. In the early operations a great deal of doubt was felt as to whether machine glass would ever equal hand blown glass in quality. Now the standard is set by machine made glass, which is recognized as the highest and most uniform quality produced in this country or abroad.

A wider range of thickness of glass is also produced by machine than can be made by ordinary hand blowers. Glass as thin as 1/23 inch and as thick as 3/16 inch is made regularly, together with all intermediate thicknesses between these limits for which there is a demand. Ordinary hand blowers make two thicknesses, single strength (1/12 inch) and double strength (1/8 inch). Not many hand blowers can make glass heavier or lighter than these standards, and because of the unusual skill required such blowers have always received extra rates for making it.

On account of the better quality and wider range of thickness of machine glass its use has been constantly extending. The bulk of the product of course continues to be used for glazing, picture framing and similar purposes. In addition, however, the lighter thicknesses are now very generally employed for photographic plates, stereopticon slides, and microscopic slides, all of which previously had been imported from Europe; none had been made in this country by hand blowing. Faces for clocks, gages, dials, etc., are likewise largely furnished from machine glass. The heavy glass finds a wide use for automobile lamp doors, wind shields and as a substitute for plate glass.

The invention of the window glass machine and its perfection to the present high standard of efficient operation is one of the most notable industrial achievements of recent years. It marks another triumph for Pittsburgh enterprise and skill, another example of the progressive spirit that has characterized for so many years the manufacturing operations of this district, and that has won for Pittsburgh such world-wide recognition for industrial leadership.

DISCUSSION

Mr. R. L. Frink:* The speaker did touch lightly on some of the troubles experienced by those who attempted the mechanical manipulation of glass and I think he could give us some more information on these, if he would. He spoke of the workmen forming co-operative association and labor organizations. I would like to ask if it is not a fact that serious difficulties were encountered by those who attempted to make a window glass machine under such conditions?

Mr. Robert Linton: That is a fact. There was a great deal of opposition on the part of the window glass workers to the development of mechanical appliances which would do automatically what had previously been done entirely by manual skill.

Mr. R. L. Frink: Mr. Lubbers was considered daft at times because he had the enmity of every one of his fellow workmen in attempting to do what he accomplished. That is a fact which I believe should be stated in recognition of his efforts.

Mr. A. Stucki:* What stands out very prominently in this development is that the machine not only takes advantage of the characteristics of glass, but it also goes much farther than that, and imitates even the method that was used before by the man blowing it, it is more or less a mechanical glass blower. I cannot think of any other development in machines, which duplicated the performance of the man, hand labor, as this machine did. I suppose, as Mr. Linton said, changes, improvements and simplifications will no doubt be made as time rolls on, thereby eliminating some of the unimportant features of the present practice.

*President, Frink Laboratories, Lancaster, Ohio.

*Consulting Engineer, Oliver Building, Pittsburgh.

Mr. E. D. Leland:† Perhaps Mr. Linton will also explain that the health of those blowers was seriously injured by carrying on that work too long, and the machine work not only replaced the man, but it has given us an industry that does not affect the health of the man as it did.

Mr. Robert Linton: The blowing of window glass by hand is really arduous work. It requires strength and endurance and is especially trying because the workman is called upon to face the heat of the furnaces while he is doing the work. For this reason none of the factories in this country operate through the summer months where hand blowing is employed, and it is also necessary for the workmen to be very careful in cold weather to guard against exposure after working a shift in the heat. The machine process does away with all these conditions of physical exertion and exposure, as well as dispensing with the skill of the hand blowers.

Mr. Samuel E. Duff:* I would like to enlarge upon the idea presented by Mr. Stucki. He called attention to the fact that this machine takes the place of the workman. It not only takes the place of the workman as far as his mechanical ability is concerned, his ability to blow or lift or something of that kind, but it also takes the place of the brain of the workman. The brain of the workman, through his training, his experience in handling the glass enables him to judge how he should use physical effort, the blast of his lungs and the manipulation of the glass, but Mr. Linton has very clearly shown us the difference between what we call a workman who uses his hands with skill acquired by experience who uses his brain to reach certain conclusions from proved facts. The mathematical development of the laws governing the action of the cylinder, that is the movement of the cylinder wall as governed by the various factors of temperatures, pressure, speed, etc., and which Mr. Linton showed us could be resolved in some instances at least into a mathematical formula, illustrates the difference, to my mind, with wonderful

†Superintendent, Compressing Stations, Philadelphia Company, Pittsburgh.

*Consulting Engineer, Empire Building, Pittsburgh.

clearness between the skill of a workman and the scientific accuracy of a man who applied his brain to deductive work from proved facts.

The reason I call attention to it at this time is that it is a little bit of hobby of mine, this dispute over education along strictly vocational lines and along technical lines, as it might be expressed. You often hear men remark that an engineer or a scientist should receive mechanical or vocational training on machinery as a workman. I have always combated that idea because it seems very clear to me that there is a distinct difference between the man who works and learns by touch or by the amount of lung pressure, as in the case of blowing these cylinders, or the force with which he has to strike with a hammer or with which he has to file with a file, who learns to judge the results of his work from the physical effort—there is a distinct difference between that kind of education and the education of the man who watches operation and notes the results and deduces from them an exact knowledge of what has to be done, without perhaps the ability to judge by the feel of the file or by some other strictly mechanical or physical means. And I have always claimed that a long vocational training, such as working in a machine shop or in a structural shop or some other actual workman's job, for an embryo engineer is a waste of time.

Mr. W. E. Snyder:* Concerning the air that is used for blowing, is the blast produced by a fan or blower, and if so what measures are taken to regulate it exactly and prevent pulsations? And also is it necessary to wash the air, and does humidity or temperature have any effect, considering different seasons of the year for instance?

Mr. Robert Linton: The air is supplied from a fan and the pressure is kept uniform by using gasometers. Unwashed atmospheric air is used. Humidity does have some effect and that is taken into account in designing the apparatus and controls the supply of air furnished to the interior of the cylinder, that is, in proportioning the sizes of the supply pipes, control

*Mechanical Engineer, American Steel & Wire Co., Frick Building, Pittsburgh.

valves and vent holes which allow excess air to escape, as well as in determining the proper blowing pressure to be used. In the early stages of the apparatus before all these factors were worked out to the proper adjustment, the humidity of the atmosphere, as it varied from day to day, did have quite an effect upon the character of the cylinders. With the apparatus as it is to-day, there is practically no trouble experienced from humidity.

Mr. A. Stucki: Does the air pressure change with the diameter and thickness of the cylinder, and also with the length of the cylinder?

Mr. Robert Linton: The air pressure increases as the cylinder is drawn. The glass in the pot gradually cools and becomes stiffer and the walls of the cylinder therefore tend more and more to contract at the point of draw. The constantly increasing air supply causes proportionately increasing pressure in the interior of the cylinder, this being so adjusted as to hold the cylinder at a uniform diameter throughout the entire length of the draw.

Mr. Elmer K. Hiles: Is the vent hole equipped with a relief valve or is there a certain diameter of opening always open to the exterior air?

Mr. Robert Linton: A certain diameter is always open to the exterior air after the cap is formed.

Mr. S. M. Kintner:* I would like to ask a question regarding the effect of variation and air pressure produced by sounds. Mr. Linton has spoken of the sensitiveness of cylinders to changes of air pressure and it has occurred to me that possibly sound waves, which are in effect air pressure changes might cause wavey glass. In extreme conditions it is quite probable that the noises produced by passing locomotives and similar sounds might be frequently resonant to that of the long glass

*General Manager, National Electric Signaling Co., Pittsburgh.

cylinders and this combination result it sound waves of sufficient intensity as to actually cause breakage of the cylinders. I should like to know whether experience has indicated that such conditions actually exist in practice.

Mr. Robert Linton: I have never noticed that sound had any effect on the character of cylinders produced.

Mr. E. D. Leland: You say you made certain adjustments to allow for humidity. Does that mean that each factory has a man who is skilled in those adjustments who is responsible for keeping the product exactly uniform in spite of changing conditions?

Mr. Robert Linton: The apparatus, as it is used to-day, is so designed that it is not necessary to make adjustment from day to day to meet changing atmospheric conditions.

Mr. A. Stucki: Referring to the valve which regulates the air automatically as the cylinder gets longer: What operates that valve, so as to maintain that certain pressure which is necessitated by the length of the cylinder?

Mr. Robert Linton: The valve is attached to a lever and the lever is actuated by the motion of the drum on which the cable winds that raises the cross-head. The connection is made in several different ways, either by a cord or by a gear. This connection is so made that as the cross-head is hoisted the valve opens.

Dr. F. L. Bishop:* When in Cleveland recently a gentleman was telling me how very backward Americans are in all things. He had been to Germany before the war and was thoroughly imbued with the idea that everything good comes out of Germany and everything that comes to America that is any good originates in Germany.

He told me that in Germany they manufactured window

*Dean, College of Engineering, University of Pittsburgh.

glass by machines. I asked him what kind of machines they used and he described them roughly, though he had never seen them in operation. I said, "That is very interesting. That machine was designed by a man from Pittsburgh. The capital for the development of the machine was furnished by Pittsburghers, and the machine which is actually in operation in Germany was built in Pittsburgh, shipped to Germany and erected by American engineers (who are now in this audience) and the Germans operating the machine pay a license every year to Pittsburgh capitalists for manufacturing window glass in Germany." The point is that this man, this American, knew all about the manufacture of window glass in Germany but not a thing about it in America. And I think it illustrates one of the tendencies to jump clear across the water to grab at some imagined good thing when the big things of the world lie right at our doors if we only took the opportunity to examine them.

Mr. T. C. McKinley:* I came here this evening to learn and not to give any knowledge, as I very much fear if I told you what I know it would seem very small in comparison with the lecture and information received from the speaker of the evening. My friend, Mr. Robert Linton, very modestly refrained from telling us the important part that he took in the development of the window glass machine. I wish to assure you gentlemen, that if the workmen, during Mr. Robert Linton's time in the window glass factory, had been in the frame of mind to do their work according to his direction and instructions, the window glass machine would have been developed to a high standard of proficiency years ago. Antagonism met his every effort, due to the fact that most of his workmen were skilled hand workers or relatives of such, who naturally did not want to see the machine become a success.

I have had the honor of working for the American Window Glass Company practically every day since the machine was started and years before a machine was thought of by this company.

*Superintendent, American Window Glass Co., Belle Vernon, Pa.

In listening to the various remarks made this evening, I heartily coincide with the remarks made by Mr. Duff, who claims that a technical education did not require a practical one with it. The manner in which Mr. Duff laid the facts before us are well founded. If it was my privilege to start over again in this world, I would have a technical education. I would therefore say to the young men, who are coming up in the world, that in getting a technical education they could not choose a better vocation than that of knowing when "Fire" has the proper combustion for the metal it is helping to produce. This thought covers a great deal of ground, probably more than the majority present can realize from a practical point of view. My practical experience has taught me that fire, the condition of the fire, and the manner in which the fire is applied, is 90% of the battle in making good glass, and I feel positive applies to other metals. I firmly believe that a greater study on the fire question, "not only from a proper combustion standpoint, but also from an economical standpoint," will open a great field to the oncoming generation.

A better glass will be made, better steel will be made, in fact all metals will be made better when the proper heat is applied at the right time.

Glass is a very sensitive metal, positively refusing to associate with any other metal.

The question was asked a moment ago about sounds. I have read where sound waves were found in such metals as steel and iron. I firmly believe that sound waves are in glass, but have never been found, owing to the fact that less is known of glass, as a metal, than any other metal in existence. To confirm this belief, it is a well known fact, in my factory, that disorder of any kind usually results in a large breakage of glass. This condition has happened so frequently that I feel positive in my statement to you this evening. I have seen one man break a cylinder, then the rest of the men in the factory chide, jeer, whistle and make all manner of hideous noises, with the result that the breakage would jump 25%. To-day when one of our men break a cylinder, quietness prevails and it is rarely that the breakage increases to any great extent. This brings out a point in my

mind that if a noise occurs, and is not kept up, there will not be sufficient harm done by the sound wave to produce a large breakage, but a continuation of any certain sound, that is not in harmony with the metal; will, in my opinion, bring disastrous results.

Mr. H. F. Clark:* I do not think that I can add anything to what Mr. Linton has said. He has given you a very close and very clear discription of the machines we use, but I might add something to what Dr. Bishop has told you of the foreign work. I had the pleasure of building the factory of which he spoke in Germany and also others in many foreign countries. I refer particularly to one in France in which, after the cylinder had been drawn, and taken down, the workmen took the cylinder of glass, severing it into small lengths and took them home as souvenirs. These were expert glass workers and were astonished at the marvelous results obtained by this machine.

Mr. Robert Linton:* Mr. Stucki, in his discussion, regarded the machine as merely an imitation of the hand blown process. As a matter of fact there are some very radical differences. The hand blower worked intermittently; he applied heat intermittently, he blew air intermittently into the interior of the cylinder being formed, he swung the roller out, applying intermittently the force that elongated it. The machine operation on the other hand, is continuous from the time the cylinder is started until it is completed, and it was the working out of the various delicate and intricate problems involved in forming, in this manner, a cylinder suitable for the production of commercial window glass that presented so many difficulties. The solution of these difficulties, as Mr. Duff has pointed out, was accomplished not by developing manual skill, but by a thorough and painstaking study of the physical factors that entered into the process.

*American Window Glass Co., Pittsburgh, Pa.

*Author's closure.

HISTORIC FAILURES OF MASONRY STRUCTURES

ADDRESS OF RETIRING CHAIRMAN OF STRUCTURAL SECTION

By Horace R. Thayer*

Masonry, as the term is ordinarily used in engineering literature, signifies a collection of hard, durable blocks bound together to form a coherent mass. Sometimes the bond is furnished only by the way in which the blocks are laid. This is called "dry masonry," and is employed for slope walls, rip-rap and so forth. For most engineering work, particularly where some strength is required, additional coherence is given by the mortar. There are three important classifications of masonry:

First comes that with respect to the cementing material, the matrix of which may be lime, natural cement, Portland cement, or possibly some other material. This is usually mixed with one to three parts of sand.

Secondly, we have that with respect to the material of the blocks. They may be of brick, terra cotta or stone. Any inert, durable, hard, strong material will serve, but the above are those in common use.

And, finally, we reach the differentiation based upon the size and shape of the blocks. Brick are usually rectangular in shape. Terra cotta has more variety and is usually hollow. Stone is employed in many forms.

It may appear as gravel or broken stone in plain concrete, or, this concrete may be moulded into blocks and laid as brickwork. Again, large pieces of stone may be used with a thin film of cement for a bond. Here we encounter many different shapes and methods of laying. Such variations are indicated by the terms, "uncoursed rubble," "random ashlar," and so on. However, perhaps the most important modification of all comes from the introduction of steel into masonry, usually concrete, the location of the metal being such as to strengthen the concrete

*Assistant Professor of Structural Design, Carnegie Institute of Technology, Pittsburgh.

where stresses are developed in which the latter is particularly weak.

Let us now analyze these types with a view to the determination of their strengths and weaknesses. Let us first assume the following average values for the ultimate strength of Portland cement, which is the most common binding material in modern engineering practice. Quantities are in pounds per sq. in. for an age of thirty days:

	Neat	*1 Cement 3 Sand*
Tension	600	300
Compression	5000	2000
Shear	300	150
Adhesion to brick	50	30

Now mortar will cost about 3% as much as steel. The ratio of their ultimate compressive strengths is about the same. Recollect, however, that the former may be cheapened by the addition of gravel or broken stone without decreasing its strength; further, it should not deteriorate, but ought to grow stronger with increasing age. The above comparison indicates plainly why it is that concrete is better to carry a given compression than steel. In tension or in shear, mortar is much weaker, carrying less than 10% as much as the same value will in steel. Even the cheapening by the admixture of a suitable aggregate can not overcome this handicap. Plain monolithic masonry is therefore suited only to structures where there is little tension or shear. The insertion of steel in the proper location remedies these defects and gives us a material which can compete economically with steel alone.

When tension is applied to a body of masonry consisting of blocks united by a thin film of cement, it brings into play the adhesion which is very low indeed. It is in fact so low that no tension whatever should be allowed upon it for just this reason. Also the shear should be limited to what may be safely entrusted to the friction between the blocks. Even under compression, block masonry is weakened by its lack of tensile strength. For mechanics shows that a material under a direct stress of one kind in one direction suffers a lesser strain of the

opposite kind in a direction at right angles to the original force; that is, a brick pier carrying a heavy load has a tensile strain in a horizontal plane. When masonry fails under a direct load it is usually due to the action of these forces. In the case of the brick pier the developed tension causes the longitudinal cracks which usually precede the collapse. We find then:

For carrying shear or tension, built-up masonry is worthless, monolithic masonry has very little capacity, while reinforced concrete has the strength provided by the metal.

THE MANUFACTURE OF CONCRETE

Concrete is gaining steadily in favor among architects and engineers. In general, we may say that it is stronger, cheaper, and more durable than block masonry. The first and last might be expected from its monolithic character. There is no plane of cleavage along which its strength is determined by the adhesion. As we have just seen, it is the tensile strength after all which limits the compression on masonry; hence, it is easy to understand the superiority of concrete. Concrete blocks possess the weaknesses of stone and brick masonry in having planes of cleavage and consequently lessened strength.

Possibly some student of English will object to the use of the word "manufacture." However, it has been employed for a purpose. It is intended to convey the idea that concrete is a combination of many materials and processes, any one of which may profoundly affect the final product. We wish to impress on every one the fact that, in order to secure dependable results, the very highest scientific skill is demanded. Concrete is not, as some imagine, merely a mixture of cement, mud and gravel.

Suppose that steel might be turned out by any gang of six or eight men with equipment costing perhaps one hundred dollars. What security would the average purchaser have that his product possessed the necessary proportion of carbon, or that the percentage of phosphorus was kept within safe limits? On the other hand, steel is produced mainly by large companies with plants worth millions of dollars and a well-organized staff of trained experts. With all this investment they cannot afford to risk their reputation by delivering an inferior product to such

purchasers as may neglect chemical and engineering inspection.

This supervision is even more necessary in the case of concrete. The cement, the basis of the latter, is every bit as complicated a product as steel. But subsequent processes are far more extensive, far more capable of harm in the masonry product. Furthermore, the injury may much more readily escape notice. Let us consider the factors, which, in addition to the cement, may affect the value of the concrete.

Amount of water: Too little will render mixing difficult and prevent the proper chemical combination of the cement, while too much tends to cause segregation.

Foreign substances in the water:

Quantity of sand: The strength decreases with the amount.

Grading the sand: That of varying sizes being most efficient.

Foreign substances in the sand: These may or may not influence results. Dust and clay which was formerly supposed to be detrimental are now known to be beneficial if not in excess.

Strength of the sand grain: The grains of sand have to carry their portion of the stress and if of weak material we have a consequent reduction in strength.

Quantity of the aggregate: Beyond a certain point, the strength decreases as the amount increases.

Grading the aggregate: That of varying sizes is the most efficient.

Foreign substances in the aggregate: These may or may not influence results.

Strength of the aggregate: This, like the sand, has its effect upon the strength of the whole mass.

Thoroughness of the mix: The ideal concrete is that in which a film of cement covers each particle of sand and a film of mortar coats each piece of aggregate.

Deposition and ramming: Segregation may occur after mixing if suitable precautions are not enforced.

Construction of the forms: The yielding of forms before the concrete has attained a fair degree of strength may cause serious injury.

Temperature on the job: The setting of concrete like many other chemical reactions is retarded by low temperature. The

effect of the weather increases as the thermometer drops. At 32° F., the water freezes and all action stops, but will begin again when the ice melts. Repeated freezing and thawing of green concrete will eventually destroy it.

Actual disintegration of the concrete may occur in other ways besides those enumerated above. These will be considered later. But the point which we wish to make is this:

Concrete is a very complex and variable product which needs constant attention from properly trained men to produce dependable results.

In reinforced concrete this question of quality becomes of supreme importance. The tendency of the present time is towards the handling of this product by large concerns making this their specialty. It is probably a step in the right direction. It puts the work into the hands of experts and a company with an investment to protect and a reputation to sustain cannot countenance inferior construction.

THE DURABILITY OF MASONRY

Concrete in any form, brick and terra cotta masonry, all stand fire very well, while stone work is usually ruined. Nothing will entirely escape injury in a very severe fire.

In brickwork, terra cotta masonry, or stonework, the question of durability is almost wholly that of the blocks. The writer knows of no case where reasonable precautions were staken that any trouble resulted with the two first named. Stone sometimes fails to show good lasting qualities, but it is difficult to foretell it in advance, or perhaps even to explain it after it has occurred.

We are just beginning to learn that concrete is not always everlasting, as had been originally supposed. The fact that concrete has been preserved from ancient times proves only that these particular batches are durable for the given location. The subject is not thoroughly understood, but it is probable that the following factors may cause disintegration:

Manure	Sea Water
Sewage	Alkaline Water
Vegetable Oils	Electrolysis

In addition, the use of improper cement or an aggregate of weak or friable material may cause the rapid deterioration of the concrete.

In spite of all that we have just named, the durability of concrete is, generally speaking, one of its chief assets. But the point which we wish to emphasize is:

Concrete, in general an extremely durable product, needs the best of engineering supervision in order that this desirable quality be assured.

REINFORCED CONCRETE

The introduction of steel adds still more to the complexity of the product by the insertion of another material. Fortunately, however, this is quite dependable. Of course, there are questions as to the proper placing, adhesion and design. We shall consider the latter at some length.

Concrete has come into extensive practical use only in the past few years, consequently our methods of analysis must depend almost entirely on our theory and our tests. It is very difficult in the latter to introduce practical conditions, although some very high-grade work has been done in this line. Also, there have been quite a few extensive tests on full-size structures.

As a result of this phenomenal development, combined with the comparative scarcity of long-tested results, there are a number of disputed points in reinforced concrete design. We will state the following:

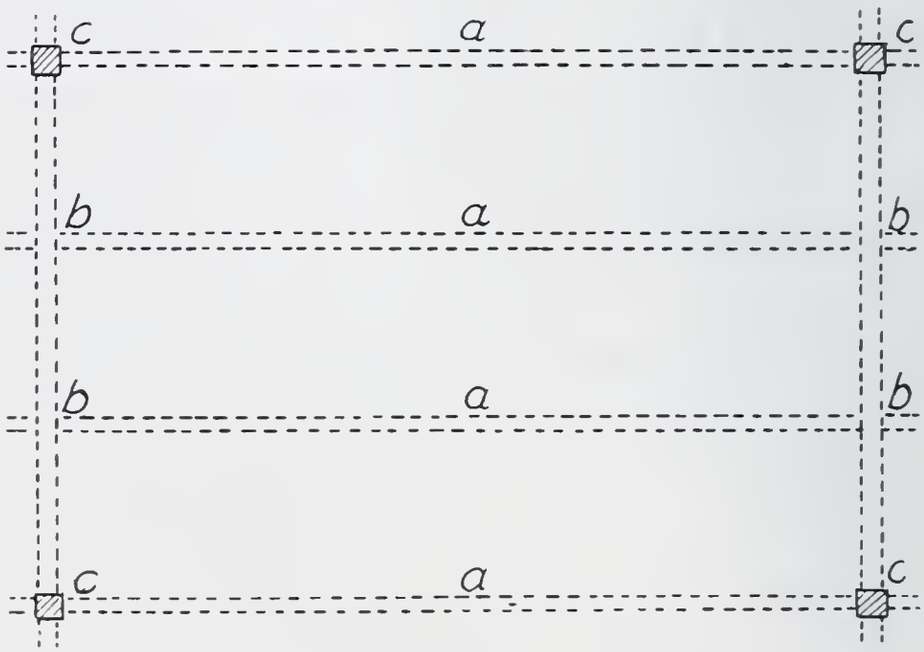

Fig. 1.

It is assumed that the concrete in the tensile portion of the beam cracks and allows the steel to take all the stress. Will not these openings permit the moisture and the carbonic acid of the air to penetrate and thus corrode the steel?

It is common to assume that the floor slab is continuous over stringers, stringers over floor beams, and floor beams over posts. At points marked *a, b* and *c* in Fig. 1 we obtain a tension in one direction cracking the concrete and a compression in another direction at right angles thereto. What capacity in compression has the cracked concrete?

The continuity assumed at the columns and usually provided for becomes a liability instead of an asset in the case of non-uniform settlement. The optimist might reply that the continuity would tend to equalize the settlement. To which the pessimist might retort that a very heavy task might confront the beams in the case of unequal loading or of variation in the strength of the foundation in a large building. To which the first named would answer that reinforced concrete buildings have been known to turn part way over without serious injury. (These will be mentioned later.)

Should a structure be designed for the live load in a conventional position or should it occupy that part which will produce the maximum stresses? We shall term the latter the "influence method." Arches are usually figured for live right, live left, or live over all. There are cases where the moment at the center, one of the critical points, when so determined, is only a third of the correct amount.

When ends are assumed to be fixed, should they be designed for this continuity? This question becomes a very important one in the case of the masonry arch. Without capacity for the stresses developed by this condition, it becomes merely a beam with very heavy stresses at the crown which is usually made quite thin in the conventional design. The writer will not hesitate in the least in answering this question in the affirmative.

Should continuous interdependent systems be figured for a full live load or by the influence method? This question refers to a series of slabs, beams, cantilevers, or arches. Should the structure be designed for no dead load in one span to cover replacement, repair or accident?

FAILURES IN GENERAL

We will repeat here those causes already given in the author's Structural Design, Vol. I, and also in a paper read before this Society and published in its issue for June, 1913. We will add comments bearing directly upon the case at issue.

IGNORANCE:

1. *The employment of incompetent men in design and erection:* In view of the many ways in which the properties of concrete may be affected it should be kept under skilled engineering supervision from start to finish. Specifications should allow only skilled foremen to direct the actual handling of the material.

2. *Supervision and maintenance by men without the necessary intelligence:* Fortunately indeed masonry is usually durable and continually growing stronger. In spite of the many things which have been enumerated which might cause trouble, it will, ninety-nine times out of a hundred, stand a great deal of abuse without serious injury. Reinforced concrete has yet to pass the test of long-continued use, but we feel a great deal of confidence in the outcome. Cases of overload and deterioration will probably occur at intervals, but the risk is very much smaller than that for steel or wooden structures.

3. *The assumption of vital responsibility by untrained executives in charge of engineers:* The ranking engineer should be thoroughly competent to do any part of the work personally and he should be the final authority in all questions pertaining to safety. Undue pressure for haste or economy ought not to be exerted upon him.

4. *Competition without supervision:* Until human nature is changed we cannot secure a first-class, economical job by competitive bidding without complete specifications and an engineer to interpret them.

5. *Lack of precedents:* This is likely to prove a prolific source of trouble in a material which has been so widely adopted in such a short space of time. Few accidents may be laid wholly to this source, in spite of the tendency of reinforced concrete designers to use rather high factors of safety and somewhat liberal assumptions. This indicates accurate methods of analysis on the part of the specialists engaged in this type of construction.

ECONOMY:

1. *In first cost:* This of course is a familiar story to all engineers. Every effort should be made to place the material in the most efficient manner, but the question is how far it is permissible to reduce loads, increase allowable stresses, and make liberal assumptions.

2. *In maintenance:* An accident, for this reason, is due to an error of judgment in allowing a deteriorating or failing structure to stand too long. Fortunately this happens very seldom in the case of masonry.

LAPSES:

Where an otherwise competest engineer has neglected one point.

UNUSUAL OCCURRENCES:

For which it is not wise, everything considered, to provide.

FAILURES OF MASONRY

Coming now to the more specific causes, there are two which stand out more prominently than any others.

First, we have those failures due to faulty foundations. There are cases of wholesale collapse of footings like that which occurred at the Cornwall, Ont., bridge mentioned in the preceding paper, or the Austin dam, to be discussed later. We must also consider those small unequal settlements which often do serious damage. As already pointed out, masonry is very weak in shear and tension. Reinforced concrete is also lacking in this respect, if unforeseen forces are present. Now settlement often introduces just such forces. It is therefore axiomatic that masonry should be avoided as far as possible where the structure rests upon a yielding foundation. No matter how skillful the design, nor how closely the footings are computed for dead plus probable live loads, there are likely to be unforeseen inequalities in the soil and the live load may average a great deal more upon one footing than upon another.

The second prominent cause is carelessness about deposition and mixing, especially in cold weather. When a warm spell follows low temperatures, we are very likely to hear of the col-

lapse of a reinforced concrete building. This means that the concrete froze rather than set.

FAILURES OF MASONRY DAMS

On April 7, 1900, a great flood on the Colorado River swept out a portion of the masonry dam at Austin, Texas.* This structure had a weir section and was about 70 ft. high and 65 ft. wide at the base. With the water flowing about 11 feet over the top, about 500 feet in length was pushed horizontally down stream 60 ft. without any apparent overturning.

The foundation here was a friable and faulted limestone rock. On this the dam slid, this action being hastened by the erosion of the rock in front of the toe by the tailwater from the power house. This may be classified as a failure of foundations, and as a result of the abuse of executive authority.

On January 22, 1910, the dam at Austin, Pa., failed. This was of the straight gravity type, 544 ft. long and 51 ft. high. It was founded on a thin bed of shale only a few feet below the bed of the stream, to which it was anchored by bolts.

The first failure was only a partial one, the dam sliding forward at the middle a maximum amount of 18 inches at the bottom and two and one-half ft. at the top. Without the approval of the engineer formerly in charge or, as far as the writer knows, the advice of any competent engineer, the dam was again filled with water. This is surprising, to say the least, when we consider its location at the head of a well-populated valley.

On September 30, 1911, the dam again failed, or, to speak more accurately, completed its former failure, more than half the structure being moved, mainly in large blocks, several yards down stream. In general, these fragments remained upright. (See Figs. 2 and 3.)

It has been urged: That the concrete was poor; that the bond was imperfect; that there was neglect to consider the upward pressure, and that the foundations were faulty.

*Engineering News, vol. XLIII, p. 244 et seq.; Engineering Record, vol. XLI, p. 340 et seq.

Fig. 2. Failure of Dam at Austin, Pa., Sept. 30, 1911. Looking West from East End.*

Fig. 3. Failure of Dam at Austin, Pa. Break Near East End Looking South.*

*See Engineering News and Engineering Record, Oct., 1911.

There were spots where the concrete was poor and where it failed along the bond lines. But, on the whole, it was good enough for the stresses developed. As a matter of fact, a strata of friable shale a few inches thick, only four feet below the river bed, does not constitute a reliable foundation. (See Fig. 4.) When the dam tilted, and moved downstream, the thin shell on which it rested broke and slipped forward. Then the upward pressure unquestionably acted, and this, with the instability of the ruptured shale foundation, allowed the dam to tilt and move forward. (See Fig. 5.)

This accident was due to faulty foundations and excessive pressure for economy.

A rather unusual failure is recorded in *Engineering News,* Vol. 41, page 307. This occurred in Minneapolis in the winter and spring of 1899-1900. Here a dam on one side of a channel 300 ft. wide was pushed over by the thick ice which formed in between. Additional stress was caused by the toggle joint action of the ice as it rose and fell under varying conditions of draft. This may be classified as a failure, due to a rather unusual condition.

Hollow Dams:

On December 5, 1909, there occurred a failure of a buttressed reinforced concrete dam, 368 ft. long and 12 ft. high, situated at Dansville, N. Y.* It was located on a bed of gravel underlaid by rock. It would appear that the primary cause of the failure was the fact that the rods were not spliced and all stopped at the same section. The failure occurred, as we should expect, at such a section where it carried a large moment, namely, at the middle of a slab. Possibly it was in part a case of poor foundations, but, in the main, it seems due to ignorance in design.

Two failures in this type have occurred in exactly the same manner. One of these was at Pittsfield on January 7, 1909.† The dam here is straight 400 ft. long and 40 ft. high. The other happened at Stony River, W. Va., on January 15, 1914.‡ This design was also straight, 1065 ft. long and 45 ft. high.

*Engineering News, vol. LXIII, p. 52; Engineering Record, vol. LXI, p. 44.

†Engineering News, vol. LXI, p. 345.

‡Engineering News, vol. LXVIII, pp. 446, 948; vol. LXXI, p. 199 et seq.; Engineering Record, vol. LXIX, p. 88 et seq.

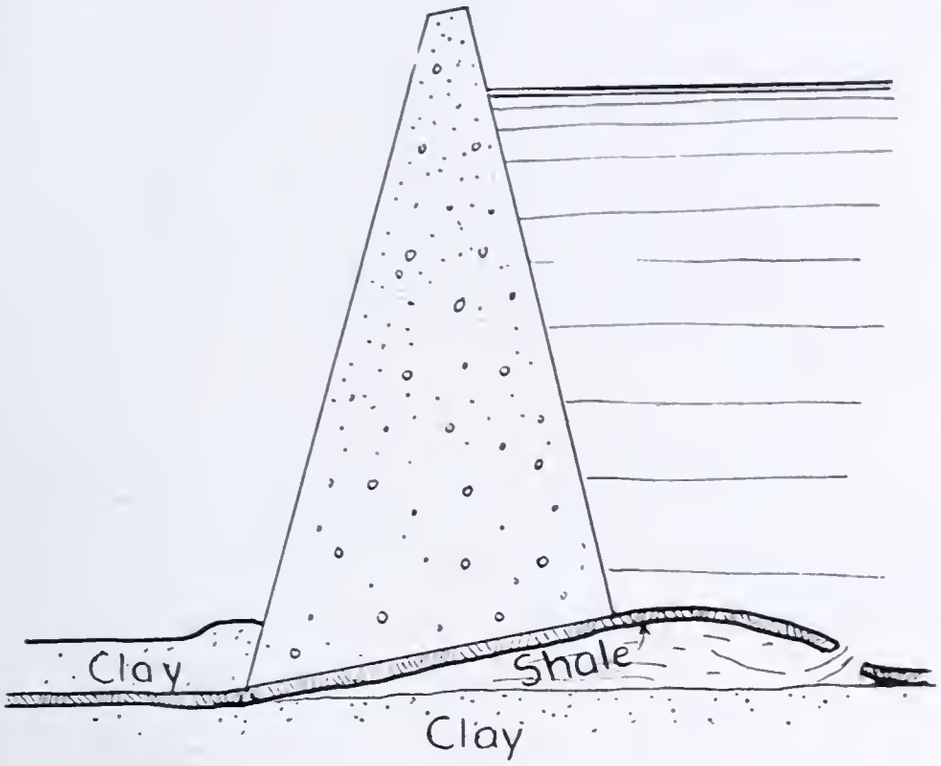

Fig. 4.

Both failed by percolation of the water underneath. As the amount increased, more and more material was scoured out until the dam was undermined. At Pittsfield the structure remained intact, bridging the gap underneath.

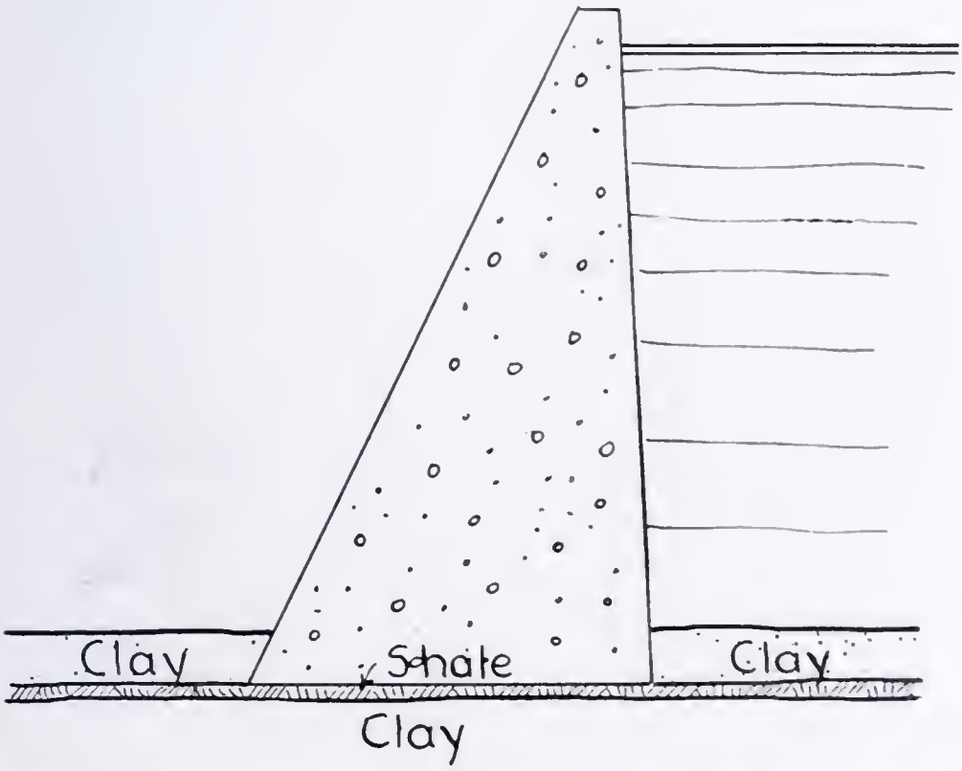

Fig. 5.

Faulty foundations have caused more trouble in dams than all other causes combined. The hollow type will probably suffer more severely because they may be located upon soil that would never carry the weight of the solid structure. Another reason is that a bit of poor material at a critical section is much more likely to cause injury. Nevertheless, they will prove quite reliable in competent hands and must be regarded as the best type for many locations.

FAILURES OF RETAINING WALLS

There is almost no excuse for the failure of this type of a structure, especially if the wall is solid. The stresses in the material and in the foundation are quite low. While there is some uncertainty as to the amount and direction of the earth pressure, the dimensions of a wall to insure stability are pretty well standardized. However, the writer has known of several cases of failure. Open disregard of customary proportion of base to the height has been a prolific cause. Often the use of a doubtful foundation or an inferior type of dry masonry is responsible for the collapse.

Occasionally the retaining wall is called upon to withstand a slide. This is usually a very unfortunate affair for the wall. Possibly one may be designed which will resist such a pressure. However, the author prefers to first eliminate the slide. If this is impossible, it is probably best to omit the retaining wall, allowing the ground to take the natural slope.

FAILURES OF PIERS AND ABUTMENTS

We have here the same general causes which were mentioned in the preceding article. A case where a slide pushed an abutment into the river, causing the failure of a large bridge, will be found in *Engineering News,* Vol. 65, page 212.

Moreover, we have additional factors. The vertical pressure may become too great with increasing loads, or the design of the shoes may be such as to unduly concentrate the reaction. The gravest trouble is caused by uncertainties as to the action of the future scour of the river upon the foundations.

The failure of the piers of the Cornwall bridge has been already mentioned. Another unique case occurred in the Lehigh

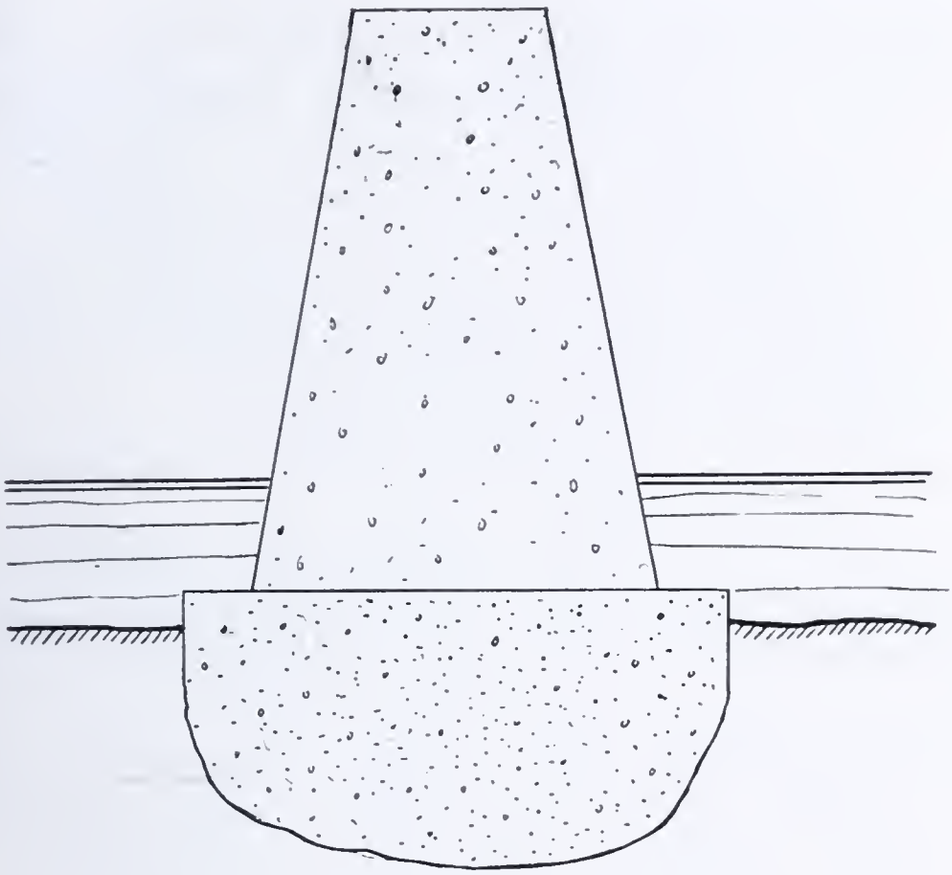

Fig. 6.

River several years ago. The author does not possess the exact facts but Fig. 6 illustrates the idea. The concrete was dumped into the rough excavation, forming an approximate spherical mass, an excellent rocker, but a very poor pier, as was found out later on.

FAILURES OF ARCHES

The author believes:

1. That arches should be figured by the influence method, as already mentioned.

2. That arches with an extreme skew should not be employed until more satisfactory methods are developed for their analysis.

3. That absolutely fixed abutments are essential for the masonry arch. If these cannot be obtained some other type of a structure should be substituted .

4. That a series of arches depending on one another for mutual support is really a rather complicated structure. Skew arches introduce still more uncertainty, and (*2*) becomes even more important for this case. The need for properly fixed ends

mentioned in (*3*) is still vital. The double thrust is supposed to be balanced at the intermediate piers. However, the serious effect of any settlement or the failure of a single arch of the series renders their stability of the utmost importance.

In the writer's opinion an arch or series of arches should always be founded upon firm gravel, hard pan, or rock. In other locations it can show economy only by ignoring the dangers involved.

5. That the use of the influence method is even more important in a series of arches.

Items (*4*) and (*5*) apply equally well to viaducts of wood, steel or masonry, and to floor arches, whether flat or segmental.

We do not find any failure due to neglect in not employing the influence method. In the first place, this is one of the things that the factor of safety, like a mantle of charity, is supposed to cover. In the next place, in highway bridges to which concrete is most frequently applied, the maximum live load in position to cause the greatest fiber stress occurs but seldom. By this time, in nine hundred and ninety-nine cases out of a thousand, the concrete has attained a degree of strength which keeps the factor of safety unimpaired. Nevertheless, the conventional method of design is extremely crude, wasteful and unscientific. If we wish to take risks, why not take them intelligently? Or, in other words, increase our fiber stresses and design accurately, using the influence method which gives us the real maximum thrusts, shears and moments.

We shall record two somewhat similar failures of masonry arches. In each bridge, three spans failed; in each case, the structures should have been independent, simple beam or truss bridges, and in each instance the engineering design was altered by those having charge of the bridge.

These failures occurred at Peoria, Ill., on May 1, 1909,* and at Edinburg, Ind., on February 28, 1910.† Both happened in times of high water, and were probably due to the thrust caused by the arches on piers unbalanced by undermining. We need not repeat the details as to these catastrophes. We do

*Engineering News, vol. LXI, p. 529.
†Engineering News, vol. LXIII, p. 323.

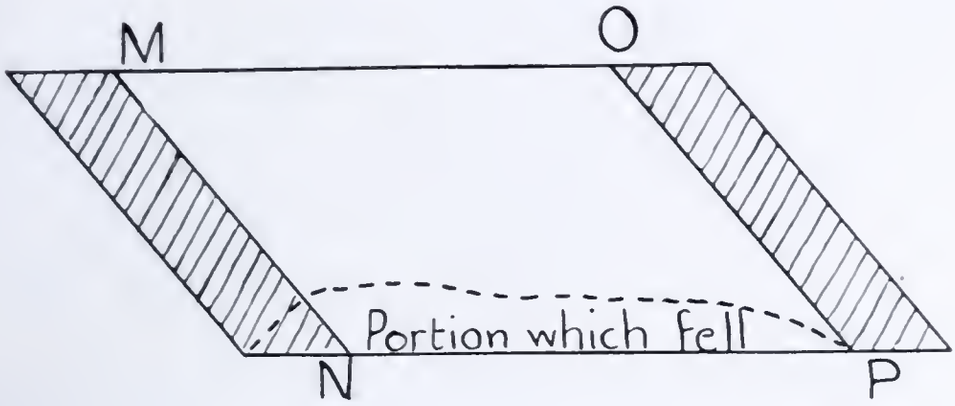

Fig. 7.

hope that the references will be thoroughly examined by those engineers who propose to found a series of arches on a yielding foundation at the bottom of a river.

About 1903 a skew Monier arch collapsed at Bendigo, Australia. (See Fig. 7.) However, the arch seemed to be correctly designed when checked in the conventional manner. Tests made by Prof. W. C. Kernot of the University of Melbourne showed that most of the stress travels along the diagonal *ON*. The failure started at the corner *N*.

FAILURES OF BUILDINGS

There is very little need of repeating the details of this class of accidents, for they show a great deal of similarity. Care-

Fig. 8. Collapse of Reinforced Concrete Building at Etna, Pa.†

†See Engineering News and Engineering Record, Feb., 1912.

less mixing and depositing early removal of forms, lack of proper inspection, and competition without the proper supervision are the usual factors. But more prominently than any other cause stands out the season of the year in which a majority of them occurred. I think that Table No. 1 gives all the cases which have received extended notice in engineering literature. Thirteen out of seventeen happened when this factor had an undoubted influence.

The difficulty of curing concrete in cold weather has already been mentioned. Of course the materials may be heated and the building kept at a proper temperature by artificial heat, but all this is expensive. However, unless the contractor is ready to undertake it he should suspend operations when the thermometer falls below 32° Fahrenheit.

Another point is worthy of our close attention. The props should be set in their correct position before the concrete is poured and should not be moved in any way until the structure

Fig. 9. Collapse of Reinforced Concrete Building at Etna, Pa.†

†See Engineering News and Engineering Record, Feb., 1912.

is cured. The writer can see no way in which the workman can ascertain that a replaced post takes its proper share of the load. An overzealous laborer might tighten up the wedges until the strut was carrying three or four times the load that it should, possibly with disastrous consequences to the beams underneath. (See Figs. 8 and 9.)

I doubt if there are any more convincing examples of the strength of properly built, reinforced concrete than the two which I shall next quote, the first coming from the *Concrete-Cement Age,* the second from the *Engineering Record.*

On October 19, 1913, a battery of 39 reinforced concrete storage tanks near Winnipeg, holding 855 000 bushels of wheat, settled 30 degrees without even cracking the concrete. The soil on which the structure was founded was a yielding clay, and uneven loading was probably responsible for the trouble.

In 1906, at Tunis, Africa, three warehouses were built on very unsubstantial foundations. Two of them tilted on their foundations, one departing from the perpendicular as much as 25 degrees. It was righted by loading the high side. One can not help wondering if they afterward performed satisfactory service.

TABLE No. 1

Building	Locality	Date	Reference	Remarks
Wing and Bostwick.	Corning, N. Y...	Dec. 15, 1903....	E.N. 51-21.....	Reinforcement practically omitted.
Reeds Bath House.	Atlantic City....	March, 1906.....	E.N. 55-396.....	Frozen Concrete.
Eastman Kodak...	Rochester, N. Y..	Nov. 21, 1906....	E.N. 57-1, 130... E.R. 55-11, 138..	Failed when forms were removed.
Bridgeman Bros...	Philadelphia, Pa.	July 9, 1907.....	E.N. 58-69.....	Misunderstood orders.
Apartment House..	Washington, D.C.	June 9, 1908.....	E.N. 59-693.....	Cause unknown.
Henke Bldg.....	Cleveland, O....	Nov. 22, 1910....	E.N. 64-36..... E.N. 65-238....	Rush job in cold weather.
Apartment House..	New York.....	March 9, 1911...	E.N. 65-336.....	Concrete very poor.
Harper Library....	Chicago.....	March 29, 1911..	E.N. 65-433.....	Cause unknown.
Prest-O-Lite.....	Indianapolis.....	Dec. 6, 1911.....	E.N. 66-780.... E.R. 64-704....	Frozen Concrete.
Spang Chalfant....	Etna, Pa.....	Feb. 19, 1912....	E.N. 67-415, 498 E.R. 65-234.....	Frozen concrete.
Alameda Hotel....	Kansas City, Mo.	Sept. 25, 1912...	E.N. 68-817.... E.R. 66-372,500	Followed removal of false work.
Cowhey Garage....	Detroit.....	Nov. 15, 1912....	E.N. 69-86..... E.R. 67-165....	Inexperienced men in charge.
Theater.....	Cincinnati.....	Dec. 10, 1912....	E. N. 68-1233....	Inexperienced men in charge.
House.....	Vancouver, B.C..	June 13, 1913....	E. N. 70-290.....	Construction probably not in accord with assumptions.
Stark Lyman.....	Cedar Rapids, Ia.	Nov. 14, 1913....	E.N. 70..... 1104 et. seg....	Too rapid loading. Excellent engineering.
Garage.....	Ogden, Utah....	June 8, 1914.....	E.R. 70-24.....	Premature removal of forms.
Hippodrome.....	Youngstown, O..	Oct. 26, 1914....	E.N.72-955, 1326 E.R. 70-593.....	Doubtful.

Note: E.N.—Engineering News. E.R.—Engineering Record.

THE EXAMINATION OF MASONRY STRUCTURES

Masonry manifests its failure in four ways, which may or may not be combined:

1. By temperature cracks.
2. By settlement cracks.
3. By pressure cracks.
4. By movement.

1. Masonry firmly held at either end and subjected to large changes in temperature is likely to crack under the tension, due to shrinkage or a fall of temperature. These cracks are very common, are seldom serious, and do not necessarily mean failure. They usually appear at intervals of about 40 feet. They are likely to be not over ¼ inch in width and are somewhat irregular, breaking at the bond between the aggregate and the mortar. As we should expect, they occur more frequently in monolithic masses like concrete. Where this is not objectionable, it is best localized by making expansion joints at intervals of 30 to 50 ft., where they will least injure the appearance and cause the minimum loss of structural strength.

2. Settlement cracks, like those due to temperature, are usually somewhat irregular. There are two characteristics by which they may be differentiated from (*1*). In the first place, they are likely to be anywhere; secondly, they are accompanied by a relative displacement in a direction other than that in the greatest length of the structure. The important point is to ascertain if they are constantly growing larger. This may be done by inserting wooden wedges or by filling the joint with mortar. The latter is useful for observation only; for, if the crack is enlarging, the bond will be broken before the set can take place.

3. The pressure crack is about parallel to the acting force. The characteristic in which it differs from (*1*) and (*2*) is that it follows straight through the blocks and is marked by frequent fine hair cracks and spalls, diverging out like the limb of a tree. The danger depends on the location. With a load possessing impact, or likely to be increased, it must be construed as a danger signal. This is especially true, if the piece so overloaded is im-

portant, and there is no other part to which it can transfer its stress.

4. The movement may be an equal downward motion, tipping, an unequal downward motion, or a bulging. The first often occurs and is usually harmless. The chief danger is that it may be accompanied by the others. Tipping alone, as in the cases already mentioned, is not dangerous if the foundations remain in the same relative position, unless the center of gravity becomes displaced enough to result in a marked change of stresses or perhaps overturning. Obviously, a great deal will depend upon the ratio of the height to the least width. Unequal settlement is a very grave matter for any masonry structure. It is inevitably accompanied by a re-distribution of stresses, tensions and shears, where not anticipated, and consequent cracking and loss of strength, with a possibility of failure. Bulging is very bad, especially if the part concerned is under compression. Once started, this is very likely to continue, for the moment progressively increases, while the masonry is likely to crack and thus weaken its resisting power.

Once cracked by excessive pressure, there is very little that can be done to repair masonry. The cracks may be plastered up, or the whole mass grouted, but these are seldom of permanent value. Usually the defective foundation must be more carefully rebuilt and the injured masonry replaced.

COMPARISONS OF MASONRY

The remarks below are on a basis of normal times, rather than present extraordinary conditions.

Stonework is being limited more and more to cases where appearance is a vital factor. Even here various methods of treating concrete are being developed which are lessening the former objection to its rough and monotonous exterior. Furthermore, concrete is cheaper for a given strength, and is fire-resisting, while stone is not.

Brickwork still continues to hold its own for thin walls where the stresses are light and a good appearance is demanded at a minimum cost. It is a first-class fire-resisting material, but is ill adapted to resisting earthquake shocks.

Concrete is an excellent material. It is strong and in general durable and fire-resisting, but quite brittle. Reinforced concrete has all the advantages of the plain variety without the last-named disadvantage. The plain material is best for walls and foundations, where its large bulk and weight are not objectionable. At equal costs, it is always better to carry a load by a weight than by a stress; for the consequences of minor faults may be much more serious in the latter case. Reinforced concrete is the proper material for arches, culverts, bridges of short span, and buildings of low or medium height.

Timber should be employed for temporary structures exposed to the weather where the duration is not expected to exceed 10 to 20 years, or where extensive alterations may be expected in that time. For a building these limits may be somewhat extended. The above advice presupposes however that there is no extensive conflagration hazard. While timber may be made as safe a fire risk as steel in many locations, it is more dangerous to the structure alongside.

Steel will be recognized as one of the principal competitors of reinforced concrete. The advantage of the latter is its durability. On the other hand we might protect the steel in which case we are likely to find it somewhat higher in cost. The writer however prefers the steel in many instances because he feels that it possesses far more security due to less liberal assumptions and greater ease of repair or alterations.

CONCLUSIONS

A talk about failures is essentially destructive criticism. But lest the idea might arise that the writer is opposed to concrete and reinforced concrete he might hasten to remark that such is not the case. He will therefore venture the following *constructive* criticism.

Wooden and steel frames are preferable in the case of yielding foundations.

The continuous monolithic structure resting on many supports should be employed only where the structure extends to solid gravel, hard pan, or rock.

The very best of expert care should supervise the mixing, deposition and curing of concrete.

The use of fiber stresses higher than 650 lb. per sq. in. in compression on first-class 1 : 2 : 4 stone concrete, and 16 000 lb. per sq. in. for steel should not be permitted. Assumptions should be reasonable and liberal loads should be provided for.

Competition without supervision is a bad practice. Either the job should be taken to a responsible concern making a specialty of this work, or competition should be allowed on the basis of detailed plans and specifications, and the whole should be entrusted to a competent engineer. A statement of the allowable stresses is not enough for there is some variation in the methods of computation. Further more, inspection as to deposition, mixing and curing should be very thorough. For the protection of the contractor he should know this before his bid is taken.

We firmly believe that those who take above precautions need fear no failures. On the other hand their structure should grow stronger with time. Like the ancient temples of the Assyrians they should remain unharmed by the passing centuries to serve as landmarks for the antiquarian of the future.

CORRESPONDENCE

Mr. Willis Whited:* This paper is very interesting and opens a wide field. In the present state of human knowledge, men must depend largely upon experience for their guidance and on principles derived from experience. In the designing of structures the engineer often has to use his judgment guided by experience of his own as well as that of other people. His own experience is often quite expensive, although the lessons taught by it are borne in upon him with greater force and a more accurate knowledge of details. The experience of other people, although less valuable in any particular case, is much wider and much less expensive to him.

*Engineer of Bridges, Pennsylvania State Highway Department, Harrisburg.

I have frequently had occasion to examine masonry structures more or less dilapidated or entirely destroyed. More bridge abutments and piers fail from undermining by the current perhaps than from any other cause. In some cases this could have been prevented, although, probably at a considerably increased expense, but in a very large number of cases, the constructor knew before hand that he was taking some chances which he could not avoid without an unjustifiable expense and in some cases, it was impossible to avoid them. Then, of course, the constructor is hardly to be censured, but in most cases the structure could have been preserved at a moderate cost by proper protection of the foundation against scour. The beds of streams are sometimes scoured and sometimes filled in and it is often extremely difficult to predict which will happen. If the former, extraordinary precautions are frequently required, but in any event, foundations exposed to erosion by streams should be carried at least below frost and, if practicable, to a firm foundation; otherwise, it should be supported by piling or other means that will protect it from collapse in case scour should take place.

Foundations on shale are, as a rule, perfectly secure, although I have known of at least one case in which a bed of fairly firm shale was cut away to a depth of more than four feet by a single storm. If the current is rapid, a clay shale (clay being more or less soluble in water) should be protected by concrete.

Bridge abutments frequently fail on account of imperfect bond between the face and the backing. Many stone masons are very careless in their method of filling backing for stone masonry. I have seen many instances in which it amounted to little more than a pile of loose rock. This, of course, places the entire stress on the facing stone and destroys any power of resistance possessed by the masonry against the shearing forces developed.

Another cause of failure which is sometimes developed is illustrated by a case which occurred in Philadelphia same years since. A series of stone arches of moderate span were built on what appeared to be rock foundation. It developed later that about 2-feet below the foundation of one pier was a bed of quick-sand of a considerable depth. The arches stood for a year or more before this weakness developed, but the whole series

of arches failed with a very few days warning. Moral, in the case of an important structure carrying heavy loads and especially of a masonry arch where absolute fixity of the masonry is imperative, borings should be taken to a considerable depth, generally as much as 10 feet below the depth at which apparently suitable foundation is reached; even though the geology of the location shows that the foundation reached is all that could be desired.

I do not wish to criticise the author of this paper, but I would suggest the advisability of including in his description of some of these failures, a more detailed account of the conditions and causes of failure in order to drive home more thoroughly the lessons to be taught by the accidents.

Mr. John A. Ferguson:* In order to intelligently discuss any matter, it must be succinctly epitomized. One must be able to grasp and hold the notion while considering the construction of paralleling ideas. Before starting to offer discussion it may be well to analyze this paper, in which there is much food for thought.

The paper may properly be separated into five divisions, as follows:

1. A description of what constitutes masonry.
2. A few of the many general principles underlying design, materials, and construction.
3. Causes to which the author ascribes failures.
4. Numerous instances of masonry failures with descriptions of the most probable causes of each.
5. Conclusions that may be drawn and lessons to be learned.

A DESCRIPTION OF WHAT CONSTITUTES MASONRY

The author's definition of masonry may be epitomized as follows: "Masonry is a collection of hard, durable blocks bound together to form a durable mass." His classification of materials with which masonry may be made is correct. His analysis of the types with a view to determining strength and weakness contains

*Secretary-Engineer, Building Code Committee, City of Pittsburgh.

many statements he should make more clear in order to express correctly his intended meaning. The writer offers this honestly as friendly and from a constructive view point.

A FEW OF THE MANY GENERAL PRINCIPLES UNDERLYING DESIGN, MATERIALS AND CONSTRUCTION

It has been impossible to state within the range of the scope of the paper all matters pertaining to the underlying principles of design, materials and construction, but sufficient emphasis was hardly placed on the matter of quality of materials to go with his unusually graphic and vigorous essay on quality of workmanship and engineering supervision of the construction. It is to be hoped this maybe added in the author's closure.

CAUSES TO WHICH THE AUTHOR ASCRIBES FAILURES

The author's statement of causes of failures may be reduced to:

1. Ignorance and incompetence of employer and employee.
2. Assumption of vital responsibility by untrained executive in charge of enginineers.
3. Lapses.

Each of his other stated causes may be assigned to one of the above, since they may be directly traced down to them. How then can the assumption of human responsibility be avoided? I say that the only alibi, may be defined as an "Act of God" or "Lapses." These may only be pleas after all other human foresight can clearly be shown to have been exercised. From this:

1. May be surmounted.
2. May be surmounted.
3. Is the only one for which a cure may not readily be found. No one has as yet offered a real cure for it. It may be manifested in very many ways.

NUMEROUS INSTANCES OF MASONRY FAILURES, WITH DESCRIPTIONS OF THE MOST PROBABLE CAUSES OF EACH

The "numerous instances of failures" have been chosen so as to show pretty clearly the causes to which failures may be

ascribed. Aside from the physical phenomena attendant upon the failures, the failures given might each one be traced clear back to either (*1*), (*2*), or (*3*) above.

CONCLUSIONS THAT MAY BE DRAWN AND LESSONS TO BE LEARNED

Under the author's heading *"The Examinations of Masonry Structures,"* and *"Comparisons of Masonry and Conclusions,"* the author gives his conclusions that may be drawn and lessons learned.

The writer would like to add to the conclusions offered by the author, a few of his own, as follows:

The writer has made the following statements in a paper before this Society:* "It is the true province of the scientist to formulate the theories" * * * . "Engineers frequently lose sight of this reasoning. At times they fall into the habit of analyzing mere definitions and postulates, assuming that the results correspond exactly with the physical conditions in the materials," and "Avoiding any metaphysical discussion of nominalism and realism, it is not hard to see that no set of symbols can fully represent physical phenomena."

To this let it now be added that engineers quite commonly make the mistake of thinking that engineering is the end of all things and not a means to an end.

Suiting this discussion to the above reasoning, significant statements may be made to which specific proofs and solutions may be appended.

1. Every one makes mistakes: An engineer is different from a doctor. A doctor may bury his failures, but an engineer's failures most always bury *him*.

2. Commonly, engineers are a bit weak in the back. As cited by the author a non-technical executive often is allowed to overrule the technical man in immediate charge who may know that what it is proposed to do is not safe, but as the writer hears most frequently, "What can I do?" he cites the following:

Always the vigorous refusal to prosecute the work further may be made along with the threat of exposure before the proper

*Proceedings, Eng. Soc. W. Penna., Mar., 1914.

government officialdom. The writer has had occasion to employ both of the above. No engineer has any moral right to go on with any work, dangerous or otherwise when he knows his work would not function safely, or as intended by the purchaser. On the other hand, no engineer has any right to be allowed to perform work, who is absolutely devoid of a true conception of his proper economic position. Engineering is not the objective, or end, only the means to the end. Engineers are rapidly coming to be more clearly understood as ordinary mortals with certain gifts and training. In fact an engineer has a distinctly human makeup as is evidenced by his many mistakes. An engineering executive will be known as a business man with a pretty fine set of tools, *which he should remember are merely tools.*

Now what has all this generalizing got to do with "Historic Failures in Masonry Structures?" Simply this: Aside from the purely physical aspect of the phenomena, the engineer must learn to see realities, forget at times that he has an imagination, put himself in the other man's place, cease to hold himself aloof, see the reason for his employment, and see what he is to do for his employer. He even may have to hold off important public work for which less careful men may be clamoring until those less careful or thoroughly prepared, and himself come to know what it is all about. Until they realize the technical phases and he, the business relations of the work to be performed.

The engineer should be the man who collects the data, classifies it in orderly fashion in proper groups of equivalent value. After an engineer has done this, he may:

1. Go on to apply his information in the prosecution of his work; or he may:

2. Lay down rules consistent with his findings and let the labor be performed by others less prepared to reason but who can, however, intelligently follow good reasoning.

The writer has offered the above remarks, they having been suggested to his mind as the broad statements under which the specific reasoning of the author may be validated, well knowing that there are those who would think it full of generalizing and therefore of little value. Right here is where such should examine themselves and find if they can see the broad issues first,

and then get down to business. Unless the broad statement or conception is made or dug out, no engineer is going to be even momentarily free from that bugbear, *"Failures,"* which constantly is present among his fears.

Mr. C. A. P. Turner:* The paper is well written. It takes into consideration many important things in the use of concrete. It appears to particularly emphasize the reliability of reinforced concrete as against plain concrete, as a paper of this kind should do.

The failures of numerous arch reservoirs which would have been eliminated and made almost impossible by the use of a reinforced—slab roof or beam and slab roof at a reduction in cost, or about the same cost, renders little excuse for the engineer to take chances on plain concrete in a series of arches where a little settlement of the foundation or other cause may produce collapse.

In the discussion of building failures in this paper the author has failed completely, as the writer views it, to point out the most common errors. Lack of sufficient lap of the metal over the support has caused as many failures as any single mistake. The Bixby Hotel at Long Beach was an example of this kind. Failure did not occur until the upper stories were being cast and the columns grew smaller as the building increased in height and the same length of bars apparently were used for the beams that had a greater span as for those which had a lesser span, lower down. The lower down bars had a considerable lap of the beam steel over the support. At the top there appears to have been little or none. This error has been repeated in numerous cases.

Again, many engineers are not conservative in their designs. They use a low working value for a safe type of reinforcement and call that conservative. They use a high working value for unsafe types of design and think it is reasonable because it is much lower than can be consistently used for safe types of design. This criticism is particularly true regarding the reinforcement of columns.

*Consulting Engineer, Jewelers' Exchange Bldg., Minneapolis, Minn.

In the building which the author of this paper has characterized as of excellent engineering design, a failure said to have been caused by frozen concrete is a case where relatively high values were used on a tied column. Values three times as high as would have been safe with a hooped column. The failure occurred in the column. The writer investigated the particular building and all the circumstances connected with the collapse. It is only a common, customary case of disregard of elementary principles of design encouraged by the majority of the members of the engineering profession.

Again, it seems almost incredible but it is nevertheless the fact that the majority of the members of the engineering profession are not familiar with, or if they are familiar with, they fail to apply, well known mechanical laws to the design of concrete buildings.

A column supported floor is clearly an indeterminate structure. The reactions at the supports, the moments over the supports, the moments at mid span, are to be determined by the principle of rigidities and the law of least work. The Joint Committee of the American Society of Civil Engineers apparently had no idea, whatever, of the application of these laws in their report on flat slabs. They may have been familiar with them, but they did not show that familiarity with them by incorporating them in their report. The failure of a school building reported by Sanford Thompson in *Engineering News* some months ago is a striking example of the results of non-consideration of column rigidity and its relation to slab stiffness. In this case the splindling 12 inch square columns with indifferent reinforcement were apparently the seat of failure. The stiffness of the column varies inversely as the square of its length. The difference in deflection where the stiffness of the columns is less than a certain minimum and where it is greater than that minimum is most surprising. The deflection of a floor slab supported on columns 22 feet long of small size and not rigidly reinforced has been found by the writer under test to be more than three times as great as the deflection of the same slab on rigid supports with the same span and the same reinforcement.

The specialist takes into consideration these differences. Inexperienced concrete engineers forget all about them.

The paper is timely. It should lead to a helpful discussion. The treatment, however, of frozen concrete is meager in the paper. The important thing in handling concrete in cold weather is to get it in hot and keep it warm the first ten or twelve days. There can be no trouble then. The concrete mixed with warm water will be a stronger concrete if properly treated, but it will be an inferior concrete if not properly treated. Surface tension of the water is greatly reduced by heating. A better mixture is secured and if the hardening is not too rapid thereafter a better and stronger concrete results. It is much cheaper in handling concrete in cold weather to apply the heat at the proper time because it does not take so much heat and it is possible under those conditions for an experienced man to know when the forms can be safely removed and have no sagging of the work thereafter. When the concrete is mixed with cold water even in frosty weather and chilled it is impossible for the expert to be sure when the forms can be removed and have no bad after effects resulting from sweating of the concrete and the work getting out of shape. Those engineers who have not had experience with material under those precise conditions will hardly believe this statement. It is not expected they will, but after they have watched the material under these conditions for about five years they will appreciate the facts.

In conclusion it is the writer's opinion that inferior designs are encouraged by the engineering profession, who have not had a wide experience with concrete, because they allow too high values for unsafe types and too low values for safe and conservative types of reinforced concrete design.

The difference in deportment in cold weather of work properly designed and properly treated under premature removal of the forms is well illustrated by a piece of work, designed by the writer's office, executed in Fort William, Ontario, some years ago. The roof slab was cast at a temperature of twenty degrees below zero, and the material was put in hot, properly treated, and at the end of less than eight days a fire prematurely removed the forms which subjected the slab to the severe temperature

stresses of high heat and generation of steam in cavities that blew out pits and defaced the surface somewhat, but the slab stood up. It required only a little plastering, a little touching up of the fireproofing of the columns to make the job good in the end, and the foreman on the job had such extraordinary confidence in the efficacy of the methods advised and employed that he remained on this roof and played the hose on his lumber which was above the roof and just started to catch fire, while the supports were burning out below him. The fire was so quick and hot that brick layers on their scaffolds left their tools and their coats, as they had no opportunity to save them.

The Joint Committee report on flat slabs, where these slabs are supported on fairly rigid columns, gives computed stresses four to five times greater than any actually discovered by the extensometer. There would seem to have been no excuse in this report for the assertion that it was justified by experiment when there is this enormous discrepancy between the facts and the fiction presented by the formula. The application of the law of moment magnitudes to the problem by Dr. H. T. Eddy in a recent paper to the Concrete Institute compares steel stresses with those which would exist were the basis of the Joint Committe report well founded and substantiates the above statement of fact.

Mr. Kenneth H. Talbot:* The paper presented by Professor Thayer has been of great interest, especially that portion referring to the carrying on of concrete construction in cold weather. Investigations made by the company the speaker is connected with and by the University of Illinois show that the temperature of the atmosphere and of the concrete, at the time of placing, materially affects the hardening of concrete.

Cold weather concreting is not child's play. Construction work of any kind presupposes organization consistent with the size of the work undertaken. In the past it has been the practice in many communities to discontinue construction work as soon as temperature drops below freezing. However, the demand for return on investment has required that work he completed as

*Division Engineer, Inspection and Information Bureau, Universal Portland Cement Co., Pittsburgh.

early as possible and that new methods be outlined to carry on the work regardless of weather conditions.

With careful organization and with attention to the details of construction, it is possible to materially reduce the lost time by heating the concrete aggregate and water and by furnishing artificial heat until such time as the concrete has hardened. An interesting instance of the use of concrete in cold weather is found in the addition to the B. & O. R. R. freight station on the North Side. The contractor has made arrangements to heat aggregate and water and to protect the concrete.

The statement made by Professor Thayer that concrete does not necessarily have to freeze before the hardening is retarded is borne out by experiments. When the minimum temperature during the day drops below 40 degrees, special methods should be adopted to accelerate hardening. Concrete should be placed in the forms at a temperature between 65 and 80 degrees in order that the early hardening of the concrete may take place under favorable conditions, so that should failure of forms or other conditions result in throwing strains into the concrete, the strength will be sufficient to withstand it.

Reference has been made to the effect of manure, sewage and alkali on concrete, and it may be of interest to know that the Navy Department has asked a representative of the Bureau of Standards to make an inspection on all concrete subjected in sea water in the Navy Department construction work. Although it is impossible to forecast the final outcome of this report, it is evident from other investigations that a dense concrete will resist the action of alkali. This is also the case with sewage. Concrete sewers have proved satisfactory whenever the quality of the concrete was good.

Aggregates are a large factor in the proper manufacture of of concrete. Concrete is, in the true sense of the term, a manufactured product, being more than cement; a mixture of workship, sand, stone or pebbles with water. The quality of the sand, the quantity of water used and the length of time of mixing all affect the strength of the concrete. Poor sand, undoubtedly, is responsible to a large degree for much of the slow hardening of concrete. Might it not be well, therefore, for all engineers to

give more attention to the quality of the sand placed in the concrete?

MR. EDWARD GODFREY:* There is nothing like getting two views of a matter. Modesty forbids me to name the author of the following quotation:

"To err is human; to persist in known errors is devilish."

I have no desire to disparage or discredit Prof. Thayer's paper. The importance of good materials and proper workmanship cannot be too strongly urged, unless in so doing a thing of vastly more importance, namely proper design, is ignored or obscured thereby. To my mind the big cause of all wrecks, literally the cause of all big wrecks, is bad design. I have never yet read of a single large failure where sufficient information was given to show the general character of the design, that the design was not seriously at fault. Furthermore, the frequent recurrence of failures of certain kinds points to culpability on the part of designers, hence the parody on Pope's famous saying at the opening of my discussion.

It seems to me, also, that engineers are quite cognizant of the necessity of good material and workmanship in all structures; whereas, wilfully or otherwise, there is a very persistent disposition to ignore some essential features of good design. Hence, my contribution to the discussion will deal with these features of design, for nowhere have failures been so rampant as in the field suggested in the title of this paper and nowhere, in my judgment, have the principles of stability and strength been so grossly violated in standard design.

The failures of practically all masonry dams can be accounted for on an inspection of their cross section. The Austin, Texts, dam is one of these. There was not weight enough of masonry in the dam to be stable against the horizontal pressure of water on the up stream face and the upward pressure of water underneath it. Why blame the foundation? No foundation that ever existed is going to reach up and take hold of masonry laid on it when forces are at work that overcome completely the weight of that masonry. The Austin, Pennsylvania,

*Structural Engineer, Robert W. Hunt & Co., Pittsburgh.

dam is another example of exactly the same thing. Here is what the designer, Mr. Hatton says (in *Engineering News,* March 17, 1910, p. 322): "The most important cause, however, was due to the water getting under the dam. This condition was not anticipated when building the dam and all precautions, which seemed to be necessary at the time, were taken to guard against it." The water was under that dam ages before the construction was started. How many precautions could be taken "to guard against it" is beyond my comprehension. Dig a hole anywhere near a stream and you can expect to find water in it and that water will rise to the level of the stream, which means pressure. Ignore this pressurer in building a dam and you are committing a crime for which there is no possible excuse. Mr. Hatton says that the concrete had not attained its ultimate tensile strength. What is the need of tensile strength in a mass of concrete that is supposed to stay in place by reason of its mass?

It is not necessary that a dam actually overturn in order to demonstrate that under pressure is the cause of the failure. The under pressure may merely start it to tilt or raise it enough to loosen it from its foundation; then the horizontal force of the impounded water will push a section down stream. Or, as in the case of several hollow dams, the under pressure may merely lift the dam enough to allow a passage way for water under the dam. This flow of water erodes the soil and the dam is under washed and "foundation" gets the blame.

There have been four notable failures of hollow dams, the three mentioned by the author at Dansville, Pittsfield and Stony River and another described in *Engineering News,* June 8, 1916, at Plattsburgh, N. Y. These failures are merely exemplifications of the immutable laws of nature that every engineer ought to learn in his freshman days and never forget to his dying day. The idea that a floating body placed in front of a large mass of water, is going to stick to the ground with sufficient hold to keep back that water has been exploded these four times. That such idea could ever find place in any intelligent mind is a mystery to me. Hollow dams such as these are criminal.

Cut-off walls have been advocated as a remedy against upward pressure. The Plattsburgh dam had a cut-off wall twenty

feet deep. The other hollow dams have cut-off walls and water squirting out of the deep holes demonstrates that such walls do not prevent upward pressure.

I am sometimes called to account for destructive criticism and asked to make some constructive criticisms. Here is one of for designers of hollow dams. Fill the hollows with concrete.

A hollow dam at Hauser Lake, Mont., was built partly of concrete and decked with steel on steel bents. I was consulted on the subject of certain features of the steel work, and took occasion to look into other features of the design with the result that in four letters to the designer I condemned outright the entire design. The dam was built in spite of my warning. The remains can be viewed in *Engineering News,* Apr. 30, 1908, p. 491, "Glacial Drift," I believe, was the nature of the heart failure" that the engineering doctors pronounced in their post mortem.

Prior to the first failure of the Austin, Pa., dam not a single book on dams in the English language hinted at the possibility of upward pressure as a factor working against the stability of a dam. In 1908 I was agitating the subject. A very prominent college lecturer and structural engineer, who was editorial writer on the *Engineering Record*, stated that though under pressure was not mentioned in the books it was well understood by engineers and taught in the colleges. I promptly sent each of his graduating C. E. students a little problem for solution. Not one of them considered under pressure. One of the students explained to me later that he had really been told of under pressure recently, but that the year before the class had designed a high dam without considering it. The Professor, he said, had revised his lecture notes because of my agitation, he believed. Under pressure has recently been adopted as a necessary consideration in the design of dams in the State of Pennsylvania.

When dams fail and under pressure is suspected, investigators invent subterranean fissures to carry the water under the dam; whereas, in building the dam in all probability the capacities of some good sized steam pumps were taxed to keep the

foundation unwatered, because of water that just naturally soaked into the pit. Why invent the bore holes?

A notable failure, which was virtually that of a retaining wall was the failure of a large reinforced concrete oil reservoir at San Luis Obispo, Cal. This is described in *Engineering News,* March 16, 1911. The wall, while circular in plan, was not sustained by ring tension but was designed to act as an *L*-shaped retaining wall. It could have no stability unless oil were prevented from working under the floor and exerting a pressure, and, of course, there was a cut-off wall to confine any oil that must of necessity leak through the wide expanse of floor and cause it to exert a pressure. In addition to this it was not properly reinforced. The thing that could have been reasoned out from the design happened. A letter in *Engineering News,* April 20, 1911, p. 490, shows the bad features of the design and why the wall failed.

I am not in accord with the author's suggestions as to the design of arches as an elastic structure, and I would not design an arch as fixed-ended at the abutments. Mathematicians begin with these two assumptions—"elastic" and "fixed ended"—and build their whole fabric of intricate and tedious formulas upon them. They always go together, because one would be hopelessly ridiculous if the other were not assumed. The elastic theory trained on a pin-ended arch would be like bringing out a cannon to shoot a fly. The large amount of labor involved by the elastic theory is wasted on a pin-ended arch, since the same results are found by the simplest means.

The moment of inertia of a rectangle of concrete with steel embedded in it cannot be calculated. It can be approximated only, by making assumptions. These assumptions are vitiated by the shrinkage of the concrete. In fact, shrinkage of the concrete doubtless affects the whole normal contour of the arch ring, and thus makes the fine theory just so much fancy work. *It is impossible to calculate even a closely approximate value for the deflection of a reinforced concrete beam and the whole elastic theory of arches, as applied to reinforced concrete, stands or falls according as this deflection can or cannot be calculated.* Then again, what about the ability of the abutment to resist the tremendouse bend-

ing moment that must exist in a fixed-ended arch. I have yet to find any elastic arch treatment that makes any reference to this feature of the design. As a matter of economy, the amount of concrete that is necessary to make an arch ring capable of resisting the full bending moment of a pin-ended arch is trifling compared with that needed to make an arch on ordinary foundations capable of resisting, in the abutments, the bending moments of a fixed-ended arch.

The tests that are said to confirm the elastic theory are either on arches that are not fixed-ended or that are rendered fixed-ended by means that are altogether impracticable in actual construction. In one case the abutments of a small arch were securely bolted to solid walls; in another a small arch was constructed on excessively heavy abutments securely anchored to a reinforced concrete slab, out of all proportion to the actual conditions as found in arch spans.

The author states that he would not employ "arches with an extreme skew until more satisfactory methods are developed for their analysis." I should like to say that methods of analysis do not sustain structures. On the contrary they often create a feeling of security, as in the case of elastic arches, that has nothing more substantial behind it than a lot of unwarranted assumptions. Skew arches of extreme skew ought not to be built at all, at least not to act as skew arches. The proper way is to build them in separate independent arch ribs each acting as a straight arch.

In addition to the skew arch failure mentioned by the author, the one described in *Engineering News*, May 13, 1909, was also an example of skew arch failure. This was a series of arches at Peoria, Ill. Three of the spans that were on heavy skews collapsed, and another span sagged badly. Of course, foundation got the blame and while the foundations were not the best, these long monolithic arches of heavy skew seem to be cause enough for the failure as a study of the failure will show.

An example of the failure of a series of reinforced concrete arches is that which occurred near Edinburg, Ind. (See *Engineering Record*, March 12, 1910, and *Engineering News*, March 17, 1910, Apr. 21, 1910, and May 12, 1910). In this bridge there were three arches in a series. The middle one, with

a 90 ft. span, had a rise of 9 ft., and the outer ones, with 75 ft. spans, had a rise (effective) of 11 ft. The piers between arches were narrow and not designed to take much thrust. The astonishing feature of this design is that the long span had the low rise and the short spans had the high rise. In consequence of this, the excess thrust of the middle span forced up one of the side spans. This side span then dropped, relieving the end thrust of the middle span, which then collapsed. This was followed by the collapse of the other side span.

One of the evils of standard practice in the design of arches is the assumption of an active horizontal pressure of the fill against the abutment or the haunches of an arch. In the arch at Peoria, Ill., some of the fill behind the abutment was manure. No kind of fill can be expected to exert an active horizontal pressure at all times; even behind a retaining wall earth may shrink and leave a fissure. The absurdity of depending upon such pressure for the stability of an arch is then manifest. This has special significance in the case of alleged fixed-ended arches. It is only rarely that a vertical and horizontal surface of solid rock can be found at the ends of an arch. How can fixed-endedness be effected without wastefulness of concrete under any other conditions?

If it be contended that the stresses in an arch will not be exactly those found by considering it pin-ended, because there is some fixedness in any ordinary abutment; I will make the counter contention that safety and not the exact working out of nice theories is the thing we strive for. Over in Germany an arch was built three-hinged just to make it fit the theory. Infinite pains were taken, with correctly placed and nicely greased hinges. The arch failed.

The arch in the foregoing paragraph would have been stable if it had been reinforced across these hinges and poured solid with concrete. But, of course, the theorists would not have known the exact stress taken by every square inch. My advise is to design an arch as pin-ended and then to build it by anchoring it into the abutment.

In the list of failures of reinforced concrete buildings given by the author I would write after each one (in all cases where

details of the design are published) as a cause of the failure, "Bad design." Take the Bridgeman Building for example. Here is one feature of the design. Roof columns 9 in. square and 19 ft. 8 in. long with a little rod in each corner. Other feaures were nearly as bad. "Misunderstood orders" the cause given by the author, does not express it.

Rodded columns and dependence upon stirrups are the two great causes of practically all of these wrecks. Cold weather, blocks of wood, sawdust, dirt, etc.—these were merely triggers that set off the traps planned by the designers.

The author's list is not complete. Additional failures are the following: A reservoir roof in Madrid (Rodded columns). The Honduras Custom House, *Engineering News*, Oct. 29, 1914 (Rodded Columns). Reservoir Roof, at Annapolis, *Engineering News*, March 13, 1909 (Rodded Columns). The Bixby Hotel, Long Beach, Cal., *Engineering News*, Nov. 29, 1906 (Rodded Columns). Fairbanks-Morse Building, Winnipeg, *Engineering News*, Oct. 5, 1911 (Rodded Columns). Filter roof at Cleveland, *Engineering News*, July 27, 1916 (Rodded Columns). To these might be added the Edison Building. The fire was the incident here. Rodded columns let down great portions of the building that would never have failed if the columns had been hooped.

Flat slab buildings have failed. The Bell Street Warehouse in Seattle (*Engineering Record*, May 13, 1916), failed under a fair test, even after seasoning nearly four months. This was a Turner standard design and no claim was made by the designer that the execution of the work was at fault, though he claimed that it had not seasoned long enough. Other flat slab buildings of this type have failed, though the failures have not been published. One flat slab building failure is described in *Engineering News*, Aug. 10, 1916. It is featured, by reason of a report by Mr. S. E. Thompson, as a failure due to poor brick work. Yes, poor brick work! Receiving the blame for a failure for which the designer is totally responsible. The only thing that remained standing above the top floor was some of this "poor brick work." The calculated load on the brick work is something like 50 lb. per sq. in., though Mr. Thompson states that "The brick work

probably received a stress more than 250 lb. per sq. in., whereas, tests of brick piers showed the beginning of failure at 167 lb. per sq. in." The fact is that his tests showed 550 and 635 lb. per sq. in. of crushing strength in the brick work. They were loaded to less than one-tenth of this in the building. The columns of this building were rodded. They crushed and let down the floor. This, of necessity, dragged down the walls. The design was abominable. Why blame the brick work, even if it was not the best. There was no provision in the walls for taking the bending moments of flat slab construction. Brick walls cannot and never could be expected to take this moment.

Another flat slab failure is described in *Engineering News,* Nov. 30, 1916. The returns are not all in. This frightful array of failures, every one of them preventable by proper engineering, is something that it will take the Profession a half century of attention to correct designing to live down. Commercialism is at the bottom of it, and the sooner this is recognized the better.

The Hencke Building of Cleveland (*Engineering News,* Dec. 8, 1910, and Jan. 26, 1911) is one of the most sinister of all of these wrecks. A large four-story building collapsed into utter ruin just before it was to be occupied. *Rodded columns.*

If any man in reach of my voice designs a rodded column structure, and if his building is the one that opens the eyes of the public to this crime of the Profession by an Iroquois disaster, I will tell him, on the day of Judgment or earlier, that I did my best to warn him. Here is something to ponder upon. *There has never been a single test recorded on a rodded column in an installation resembling a building excepting these wrecks.* Now, who is traveling on theory, the standard designers who have no data but theory and conflicting nursery tests, or myself who am freely accused of being a theoretical visionary?

Two reinforced concrete bridge failures deserve notice. One, a girder bridge, fell under the load of a traction engine (*Engineering News,* Sept. 27, 1906). The other, of the same style, fell *with no load upon it after two years of use.* Neither bridge had any real provision for shear or diagonal tension. Short shear members, sheared off the side of the main rods, were there. After the failures they were down in the creek.

Chimneys deserve some mention among masonry structures that have failed. Several reinforced concrete chimneys have failed because there was a sharp offset or increase in diameter and the outward force produced vertical tension cracks and finally failure (See *Engineering News*, Oct. 11, 1906), In 1900 a brick chimney at Hamilton, Ont., failed (See *Engineering Record*, Apr. 28, 1900). The walls of this chimney were 5 ft. 6 in. thick at the bottom and the bricks were laid in lime mortar. The chimney was 200 ft. high and 19 ft. 4 in. in diameter at the base. It was evident that the lime mortar crushed. It might be claimed that this was a failure due to bad material, but there is enough in the design to anticipate failure. If the walls had been a fraction of this thickness, and if cement mortar, tempered with lime, had been specified, the designer would have been doing his part. Lime mortar in walls of this thickness may not harden for years. Two hollow brick chimneys failed. These are referred to editorially in *Engineering News,* Feb. 17, 1910. In my judgment these failures were the result of the design of the bricks. Hollow bricks are a good talking point, but when it comes to laying them up on the job and bringing web over web with a layer of mortar between, this is practically impossible in the commercial way of laying bricks. Another hollow brick chimney failure is described in *Engineering Record,* Aug. 5, 1916, p. 173.

Mr. C. M. Reppert:* Professor Thayer's paper is unusually interesting and has been very ably presented. Its value lies in the fact that it relates to the principal factors underlying the basis of design.

The importance of first-class inspection in concrete construction has been well emphasized. With so many elements entering into the strength of the completed structure, disregard for any of which may cause failure, it is well for the designer to take into account the question of inspection in designing and proportioning his structure. While inspection is often unduly and negligently disregarded or slighted, it is nevertheless true that it is difficult to obtain good inspection. Perfect inspection is as rare

*Division Engineer, Division of Design, Bureau of Engineering, Dept. Public Works, City of Pittsburgh.

in practice as perfect engineering and the designer should not rely to much on perfection in the inspection and execution of his work. The foregoing statements are not to be taken as condoning faulty inspection but to emphasize the point that the design must to some extent, be influenced by the quality of inspection. In reinforced concrete some members on account of their dimensions, location or reinforcement are more difficult to properly construct than others and in such cases it would be proper to make an increase in the factor of safety. Simplicity in designs and clearness in plans and specifications do much to eliminate difficulties in inspection.

Having had considerable to do with the design and construction of a number of retaining walls in this vicinity under a great variety of conditions the speaker has been much interested in the part of the paper relating to settlement, unequal loads and the causes of failure of retaining walls. The bearing value of earth, clay and other materials and the amount and direction of earth pressures are more or less indeterminate factors, and this being the case there is opportunity for the exercise of engineering judgment to a considerable degree in design. It is not enough that a structure subject to these forces be stable but the design should be economical; economic failures are to be avoided as well as structural failures. In the case of retaining wall design, under many conditions the inexperienced designer may design a structure which will be stable; generally this is accomplished by resorting to standardized proportions. But such practice may easily result in waste of materials and in a greatly increased cost of construction. The practice of blindly following standard practice in such work is not to be recommended; conditions should be examined into and analyzed and the design should be influenced by the conclusions drawn. An eminent authority has stated that no one should be considered an expert in the design of retaining walls until he has experienced at least one failure.

Many failures of retaining walls which the speaker has looked into have been due primarily to lack of drainage. It is doubtful if a design for a retaining wall can be considered as complete unless adequate provision is made not only for thoroughly draining the material behind the wall, but also for carry-

ing it off; these features should receive as much attention as the design of the wall itself.

Reinforced concrete has to a great extent displaced the old type of gravity wall in municipal practice in Pittsburgh. This type has proven economical particularly where foundations were poor and it has been possible to save materials by sinking piers or driving piles. A number of walls, both of the cantilever and buttress type, have been constructed and no failures have resulted. Particular attention has been paid to drainage and the factor of safety has been augmented by providing extra secure anchorages and allowing extra bond distances in the reinforcement. These walls of necessity have been constructed in some instances by inexperienced contractors, and it has not always been possible to assign the more experienced inspectors to the work so that the aforementioned safeguards and others have been employed, and while they slightly increase the cost of the work, they add greatly to the actual factor of safety. I have noticed in the plans of a number of buttressed walls that negative reinforcement at panel points has been neglected to the detriment of the design and the durability of the structure. If earth pressures act as assumed so as to develop the positive reinforcement of the curtain wall, then the design at the panel points would necessarily be defective and failure will result in time.

Concrete and reinforced concrete have to a great extent displaced brick and stone masonry in sewer construction. There have been very few failures in sewers in this city that have not been due to the actual wearing out of the structure due to service. The older sewers, many of them built fifty and sixty years ago were of soft brick laid in lime mortar and since steep grades predominate with resulting high velocities the scour has been sufficient in many instances to completely wear out inverts to these sewers. The failures that have resulted have been due to this scouring action and to heavy fills placed over the sewers in years subsequent to their construction.

The possibility of sewage damaging concrete in sewers is one of considerable interest. While we have been building concrete sewers for a number of years there is no evidence that the structures have been damaged due either to ordinary sewage or to

acid wastes. There have been some cases in other cities of disintegration of concrete caused by gases collecting in the sewer as a result of poor ventilation.

Mr. Wm. Archie Weldin:* I want to add my voice in appreciation of the paper of the evening, particularly as to the subject chosen. That a structure is still standing is no proof of its strength, still less of the economy of its design. On the other hand, much can be learned from careful study of failures. This is the final empirical test of all theories.

The subject by intimation at least fairly includes as failures, those structures which do not have an economical length of life. I think this is entirely proper, although it is a matter that is not very easy to get at.

Our work as engineers often ends after the structure is put into use and it is hard to follow up and find out whether it has proper life. This applies especially to steel structures. I have been very much interested in a certain class of steel structures such as coal tipples and some mill buildings which are exposed to severe conditions, such as coal dust and gases. Some of these buildings have very short lives indeed, and it has struck me very forcibly in certain instances that the life of such a structure depends upon the protection given. There are cases where excesive corrosion has been stopped by removing the corrugated sheathing. The explanation offered is that the wind keeps the structure clean of accumulations of coal dust and also gives a much better chance to keep the steel fully protected with paint. The designer should consider, among other things, how he is to paint parts that are difficult of access to the painter, but accessible to gases and dust.

In the structures I have in mind, special steel details, such as battens in place of lattice, I-shaped instead of two member struts, etc., are worth while; also care should be taken in placing of floors, sheathing, etc., around steel members.

I was glad to hear Prof. Thayer use the word "manufacture" in connection with reinforced concrete. I think this expresses very well the greater relative importance of field methods

*Of Blum, Weldin & Co., Engineers, St. Nicholas Bldg., Pittsburgh.

in this material. Mr. Reppert intimated that the designer should be influenced by the conditions of his inspection. I would go farther than this and say that he should be responsible for the inspection, particularly in material of this kind which depends so much upon these manufacturing processes in the field.

My idea is that the designer should control the situation. How can he properly allow for conditions in the field unless he knows what those conditions are to be?

I am glad to hear mention made of draining behind retaining walls. While that is a subject well understood by engineers, the fact is that many walls are built without regard to drainage, whereas no design contemplates any hydrostatic pressure.

I would like to ask Prof. Thayer for a little more information on the effect of sewage on concrete. I do not remember much in the literature of the subject on that particular point. Is this damage sufficient to unduly limit the life of sedimentaion tanks, such as are used in sewage treatment works or is it of moment only in special cases, such as manure pits, etc.? Many sewage treatment plants heretofore have been built to serve combined sewers in which rain water largely dilutes the sewage, but in future the separate sanitary system with more concentrated sewage will be largely used, and it may be that the condition to which I refer should be looked into.

Mr. G. L. Christy:* After listening to the reading of Mr. Ferguson's discussion, what the speaker has to say may appear like an abrupt transition from the general to the specific.

Professor Thayer has touched upon the subject of failures, or partial failures, due to expansion or rather contraction cracks. About four years ago the speaker had occasion to design the engineering features for a large reinforced concrete stadium for the College of the City of New York. This building was approximately 460 ft. in one dimension and possibly 200 ft. in the other. It was of monumental character and of very elaborate architectural treatment, and it was desired to reduce to a minimum the possibility of unsightly contraction cracks. We therefore made

*Chief Engineer, Pittsburgh-Des Moines Steel Co., Pittsburgh.

a careful study of the literature of the subject and made special investigations of several existing structures.

These investigations included the study of a report on the contraction cracks developing in the stadium at Syracuse, a report on a reinforced concrete stadium in Brooklyn and personal visits to the grandstand at the Polo Ground in New York which is built partly of reinforced concrete, and to the Harvard Stadium at Cambridge, Mass. In this latter building no provision was made for contraction with the result that unsightly cracks developed in the exterior walls of intervals of about 70 ft.

As a result of these various studies we decided to provide contraction joints spaced at intervals of about 30 to 50 ft. in each direction. The exact spacing depended to a certain extent upon architectural features since it was desired to conceal these joints. This design therefore provided a structure divided into sections having maximum dimensions of about 50 fet. Definite joints were provided and not merely chalk lines to indicate where it was desired that the cracks should appear.

The designing of these joints was rather tedious and consumed probably 75% of the total time spent in designing the engineering features of the structure. The speaker left New York before the construction of the building was begun and Mr. Charles Mayer, who was retained by the architect as engineer, made some modification of the design. The construction was begun in the spring of 1914 and completed sometime in 1915. The *Engineering Record* of January 1st, 1916, gives a very good description of the stadium. The topography of the building site was very irregular, the rock cropping out at one corner and being possibly 70 ft. below the street surface at other points. We recommended that all the foundations be carried down to rock.

While the speaker has not seen the structure since it was completed, he has heard of no serious cracks developing. Possibly some of the gentlement present may have had an opportunity to examine this building.

Prof. H. R. Thayer:* I was very much interested in the remarks of the last speaker and I wish he could have taken a little more time to tell us something about those difficulties and just how he overcame the expansion and contraction.

*Author's closure.

Mr. Weldon's remarks about the life of the structure are quite timely. I wonder how reinforced concrete would work out in buildings so subject to corrosion. However, there might be some doubt as to whether the expected life of the mine, say 25 years, would justify the expense. Concrete is likely to be seriously affected by sewage containing acids or strongly polluted water.

Mr. Reppert hit the heart of the whole discussion so far as foundations are concerned, when he spoke about drainage. Lack of drainage is bad in two ways. It increases the pressure against the wall and renders the foundation far less likely to withstand the pressure; so that when you drain the site you have done fifty percent of what is necessary.

Mr. Talbot spoke about the action of cold weather on concrete. I was rather under the impression that as the temperature increased the chemical reaction increased also and that it went up to pretty high temperature. I am not opposed to concreting in cold weather, but it is an expensive problem. One should be sure the contractor understands that it is to be done and that he must pay the cost of that work. It is pretty hard to make the contractor do something on which he has not figured.

I cannot agree with Mr. Godfrey that it is right to figure an arch as pin ended and then make it fixed. He is excessively afraid of that continuity at the end. It is not half as frightful as it seems. All it means is that the reaction is displaced a few inches from the center line of the ring and all you have to do is to spread out your footings so that the reaction comes within the middle third of the footing, and if you have so much rock, gravel or hard pan, it is all right; but I would be afraid of figuring a pin-end and then making it fixed. I do not believe that any one has any right whatever to make one thing and figure it out as another, unless he has a lot of *tests* to back him up.

With no provision for drainage, the upward pressure on the base of a dam should be assumed to vary uniformly along the base from that due to the retained head at the heel to that due to the backwater at the toe. Efficiency designed drainage might readily eliminate most of this. If our friends' contention were strictly correct no hollow dam could withstand its pressure for one minute.

BLAST FURNACE AND STEEL MILL POWER PLANTS

A Discussion of the Most Economical Plant When All Costs Are Included

By Richard H. Rice* and Sanford A. Moss†

ABSTRACT

One of the most important of the various factors which are now being used to secure the proper working of blast furnaces is the introduction of the turbo-blower for supplying the blast. One of the valuable features which may be used with the turbo-blower is the "Constant Volume Governor," which gives the most accurate known means of controlling the blast. A recent improvement readily corrects the volume to eliminate effects of changes of barometer, thermometer and humidity.

The use of turbo-blowers for blowing, and of turbo-generators for generating electric power for steel mills from surplus gas, gives a type of power plant which is competitive with a plant using gas directly in gas-engine-driven blowers and generators. Complete tabulations of the cost of operation of each type for four blast furnaces are given.

The first costs are found, and from them are computed the fixed charges at the rate of 13 percent. To this is added running charges and cost of make-up coal. A small amount of make-up coal is used in the gas-engine plant to equalize poor gas and excess power demand, and a somewhat larger amount is used in the turbine plant. The gas plant first cost is about two and one-half times the steam turbine plant first cost so that, taking account of fixed charges, the total operating cost of the gas plant is about twice that of the steam turbine plant. This item of first cost is so influential that, regardless of exact details used in comparisons, a steam turbine plant will always turn out to have lower total charges than a gas engine plant if fixed charges are included.

The blowing of blast furnaces is a process which, at best, is attended with considerable variation, in the operation of the furnace, and in the factors which are necessary to the proper

*Engineer, General Electric Company, Lynn, Mass.

†Engineer, Turbine Research Dept., General Electric Company, Lynn, Mass.

working of it. In modern furnace practice every effort is being made to reduce the number of variables and increase the steadiness of operation, and a careful study of these variables and what is being done to decrease or eliminate them will be useful. The variable elements which enter into the operation of a blast furnace are as follows:

1. Variations in the composition of the ore, and variations in the size of the particles thereof.
2. Variations in the composition and in the size of the particles of the limestone.
3. Variations in the carbon contents, strength, and size of the coke.
4. Variations in the quantity of oxygen blown into the furnace, due to variations in barometer, temperature, and humidity of the entering air.
5. Variations in the pressure and volume of the blast, due to the character of the blowing agent.

Of these variables, those which have no relation to the blast are being dealt with as follows:

1. Variations in the composition of the ore are being dealt with by proper combinations of ore; and variations in the size of the ore are being dealt with by proper means of sizing the ore, including crushing, screening, sintering and roasting.
2. Analyzing and mixing various compositions of limestone in order to secure a uniform quality.
3. Careful choice of coke, and proper attention to the uniformity of manufacture.
4. An attempt to decrease the variables in blowing was made by the introduction of the dry blast. The expense of the plant for this method of removing the moisture from air and the operating cost thereof is so great that this method of treating the blast has not made any considerable progress recently.
5. The introduction of the turbo-blower has provided a means of rendering the blast conditions much more uniform than is possible by use of the reciprocating engines heretofore used exclusively for this purpose. Not only is the blast pressure held steady but also the very steadiness of the blowing permits accurate measurement of the air volumes, and accurate adjustments thereof, and compensation for variations in barometer, thermometer and humidity; so as to insure a constant rate of flow of oxygen into the furnace, and the accurate adjustment of this rate to the needs of the furnace conditions.

It is difficult to demonstrate, to those furnace operators who have not had experience with the steadiness and ready controllability of the blast from a centrifugal compressor, what the effect

of this steadiness of conditions will have on the furnace; which is in direct contrast to the attitude of those who have had experience with the operation of such units. In no case has there been a failure on the part of people who have acquired experience with this method of blowing, to appreciate the improvements which result from these conditions. It is only at this time, however, that an accurate means has been provided for correcting the rate of blowing to correspond with the variations in atmospheric conditions. Experience with the use of these corrections is very limited; only one case is known to the writer where some of these corrections have been applied by observation of the atmospheric conditions and an arbitrary correction of the weight beam in accordance with this observation, and in this case (I am speaking of the Northern Iron Company, Port Henry, N. Y.) the correction has only been made for barometer and temperature, and no attempt has been made to correct for humidity. It is not to be wondered at that those whose experience is exclusively with ordinary methods of blowing should fail to appreciate the desirability of the steady blast and the accurate measurement of oxygen, for the reason that there are so many variables which necessarily have occupied the attention of our blast furnace operators that it has been almost impossible to differentiate and evaluate the various variables which have to be dealt with. By the recent improvements in the operation of furnaces, which permit the removing of some of the variables by sizing of the ore, and by proper attention to the coke and limestone charges, some of these variables are being removed and the final step would seem to be the removal of all possible variations from the blast itself.

It goes without saying that the blast from a centrifugal compressor will be a steady flow without pulsations. The very nature of the apparatus necessitates this. It also seems evident, and has been proved by actual observation of the blast delivered from a reciprocating machine discharging its air in puffs, each puff corresponding to one stroke of the engine, that the flow of the blast must be more variable and produce some variations of effect in the furnace. Whatever these variations are, it seems evident that it is desirable to remove them. Ex-

perience with centrifugal machines on blast furnaces demonstrates this, and shows that an improved output, a somewhat less quantity of dust, and a general steadying up of conditions has resulted. A part of this improvement is due to the steadiness of the blast, and a part is due to the more accurate control of the rate of blowing.

An interesting experience which shows the importance, and even absolute necessity, of accurate control of the rate of air flow has been had with a blast furnace centrifugal compressor within the last few years. In this case the measuring device which was relied upon to determine the rate at which the blast was being blown was so located that the indications of this measuring device were inaccurate; at some times indicating more blast than was actually flowing and at other times less. The result of this inaccurate measurement of air was an inaccurate adjustment of the machine, causing excessive quantities of dust to be produced and a decreased output from the furnace, as compared with the reciprocating engines, which were installed to blow the same furnace in alternation. After operation in this condition for a considerable period the measuring device was relocated where the connections were more accurate. I am informed that the result of this relocation and consequent more accurate operation of the blower, was to decrease the quantity of dust to normal and increase the output of the furnace. In order to determine the effect of improvement in these parts such instances are of extreme value. They show the importance of the proper regulation of the rate of flow of blast and indicate the possibilities which can be expected when inequalities and irregularities are entirely removed.

A governor has previously been described which is capable of accurately controlling the rate of blowing. For the sake of clearness the description of the governor is herewith reproduced:

This governor is used on blast furnace blowers built by the General Electric Company. It consists of a disc riding on the ingoing air in the center of a frustro-conical portion of the inlet pipe. Movements of the disc are transmitted direct to the valve gear, and ample power is secured by the use of very moderate dimensions. The angularity of the walls of the conical pipe is determined by the desired accuracy of regulation. No

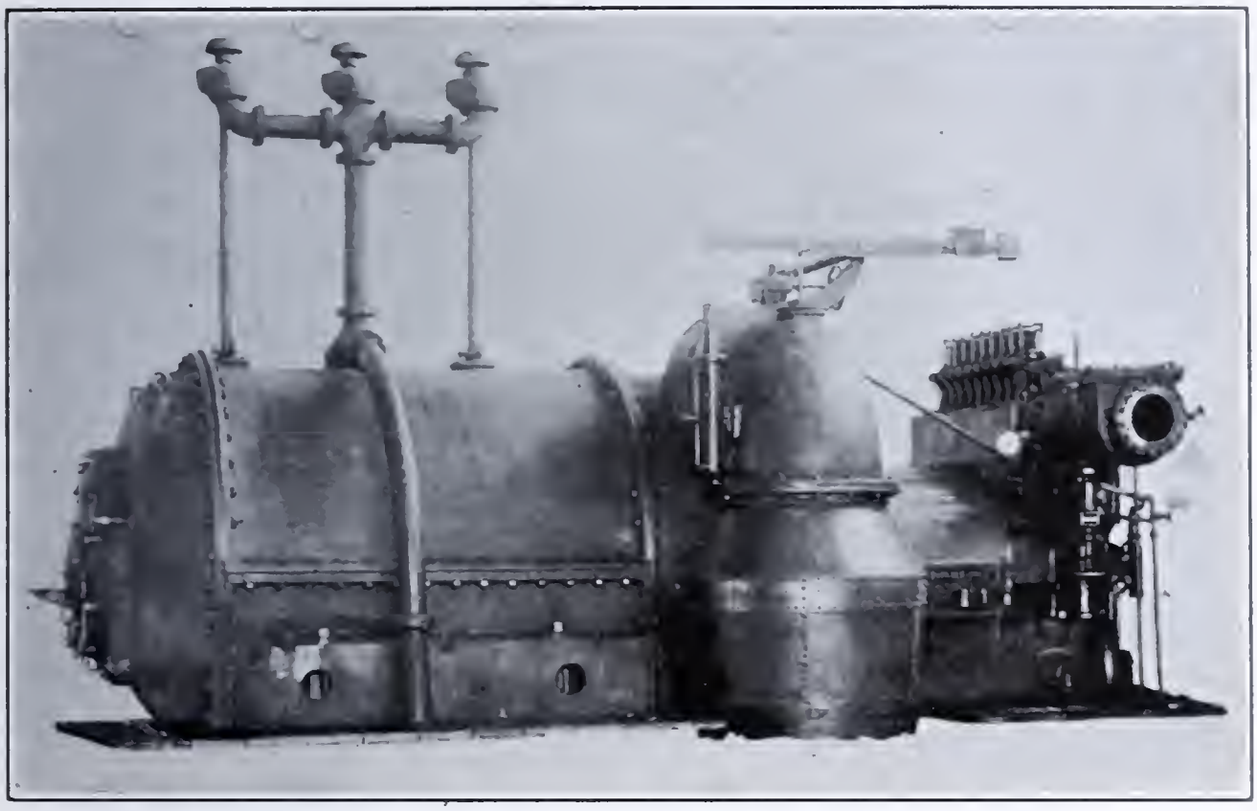

Fig. 1. Turbo-Blower With Constant-Volume Governor.

packing is necessary and the device is therefore practically frictionless and wearproof. Differing rates of flow are secured by moving a weight, *B*, along a scale beam, which is graduated in cubic feet of free air per minute, and carefully calibrated at the factory before shipment.

A recent improvement of this governor consists of a means of adjusting the index on the sliding weight to compensate so that the weight can readily be reset to take account of variations in atmospheric conditions. The following is a description of this device, which is called a "Volume Corrector."

On the scale beam are lines marked with various numbers of cubic feet per minute. An index marked on the sliding weight is set opposite the number of cubic feet per minute which is desired should be held by the constant volume governor. This index is adjustable and its exact position is secured by the setting of three scales which are carried on the sliding weight. These scales are for barometer, atmospheric temperature, and atmospheric humidity. Proper settings on these three scales are made corresponding to atmospheric conditions, and this automatically sets the index on the sliding weight in such a position that the corresponding volume on the scale beam is corrected for the atmospheric conditions as set.

A phenomenon with which we had to deal in the early days of our experience with centrifugal compressors on blast furnaces was the so-called "surging" which appeared when the machines

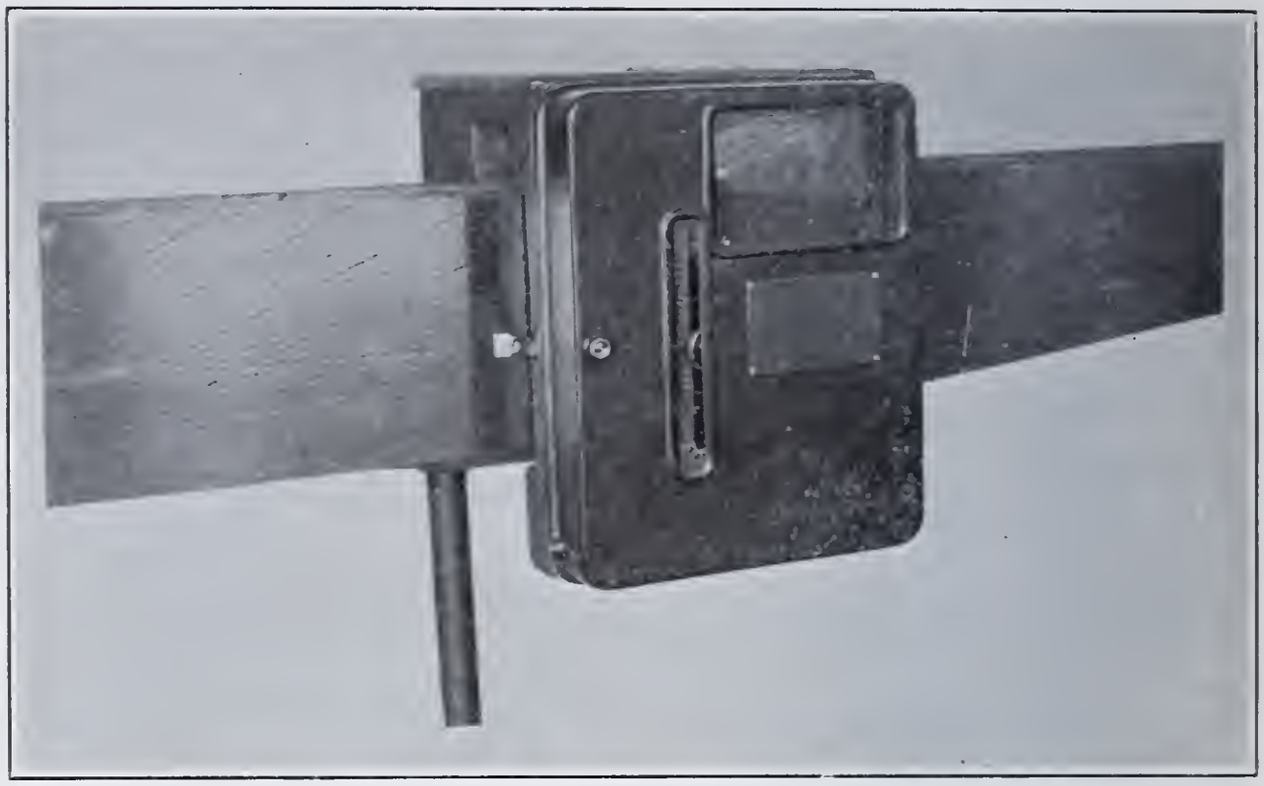

Fig. 2. Volume Corrector for Taking Account of Atmospheric Conditions With a Turbo-Blower Equipped With a Constant-Volume Governor.

Fig. 3. Volume Corrector—Open.

were operated at considerably less rates of blowing than those for which they were designed, or when excessive pressures were met with, as in case of tightening-up of the furnace.

The phenomenon which is called "surging" is only met with when, at normal pressures, the volume being blown through the centrifugal compressor is considerably less than that for which it was designed. In case of high pressures, for instance with a tight furnace, this phenomenon may be met with, although the volume discharged is about that for which the machine was designed. It consists of an alternate forward and back flow of air through the compressor, and is the result of the improper functioning of the discharge vanes owing to the variation of blowing conditions from those for which the vanes were designed. These alternate forward and back flows through the compressor result in a variation of pressure in the discharge mains of sometimes as great as two pounds, and cause some irregularity in the working of the furnace. This phenomenon is not peculiar to any one type of centrifugal compressor, but is met with in all types. For some time after the installation of our first machines this phenomenon was difficult to deal with, particularly as the first machines were designed for much larger quantities that have ever been blown through them. However, in the ten years of experience which we have had with this apparatus effective means have been devised and applied which render it unnecessary that any such phenomenon should again give difficulty.

The steps which have been taken to eliminate this surging are: First, the reasonable proportioning of the machine to the requirements of the furnace; second, provision of a by-pass with an automatic valve which, under conditions which would ordinarily permit surging, leads back into the inlet a small quantity of air. This valve is self-compensating for variations in volume and pressure, and once adjusted needs no attention. The use of this apparatus increases the efficiency of operation in conditions where it is operative, since it maintains the proper air discharge pressure without diminution.

The centrifugal compressor, therefore, properly governed, affords a means of blowing the blast furnace with the steadiest

possible conditions of blast and the most uniform rate of inflow of oxygen contents; a means of blowing which can be instantaneously adjusted to meet any variations which may be necessary in the composition and mechanical conditions of the charge; one which is automatic in operation when set for any existing condition and quickly reset for any change of condition of furnace or atmosphere; and one which requires far less care and attention on the part of the operating staff, including these adjustments, than any other known type of blowing apparatus; while a smaller expenditure for repairs and a smaller percentage of time out of service for making such repairs, will be necessary.

Another very attractive feature, which tends to uniform operation, and permits of more accurate determination of the blowing conditions, is the fact that the turbo-blower is readily manufactured in such sizes that a single blower can be used for blowing a single furnace. In this way each blowing unit is adjustable to meet the exact furnace conditions with the utmost ease and certainty, thereby increasing the uniformity of the product and the amount thereof; also decreasing the gas consumption, since the turbo-blower is more efficient in the larger sizes than in the smaller, and also because two units, whether of turbines or of engines, are less efficient than a single unit; this on account of the fixed losses which exist in every turbine or engine unit and which do not increase in proportion to the size of the unit.

The superior efficiency of the turbine need hardly be argued here. It is the cause of its adoption as a prime mover in all our central power stations, and in practically all our industrial plants throughout the country in competition with all other forms of units. Very recent improvements in turbine construction have greatly improved the efficiency of such units, and these units of increased efficiency are now available in cases where steam consumption is an important requirement of blast furnace blowers. The discussion which will follow as to the cost of blowing furnaces will be based upon the use of one of these modern units. Another attractive feature of this type of blowing apparatus is that, considering its efficiency, its first cost and cost of installation, its operating costs are also lower.

In determining the availability of turbo-blowers for blowing furnaces, two cases arise in practice. The first case is where the furnace is not connected with any steel mill and is not located in a place where surplus gas is of any value. In this case the highest efficiency is not necessary because, in general, the turbo-blower is so economical that the supply of gas to the furnace is greater than is necessary to generate steam for blowing and for the other plant purposes, and therefore large quantities of gas go to waste. When, however, a steel mill is located adjacent to the blast furnace and the surplus gas can be used for generating electric power for operating the mills, the question of gas consumption becomes of vital importance, and is one of the elements which is to be considered in determining the availability of the apparatus for the purpose. For this reason a considerable amount of data has been gathered, for the purpose of making a study as to the relative operating costs of the competitive apparatus now in use, and which can be obtained, for use in steel mills where blast furnaces are included in the equipment.

In a previous paper* it was shown that the reciprocating steam engine is considerably less economical than, and of about the same first cost as, a turbo-blower, and therefore need not be considered in any discussion of this character. This is still more true since recent improvements in steam turbine efficiency have become available for this use. I have, therefore, confined this analysis to installations of gas engines for blowing blast furnaces and generating electric power as contrasted with steam turbines using the gas under boilers for both blowing and generating the necessary steam.

Reliable figures have been obtained from existing plants as to the actual cost of operation, both for the gas plant and the steam plant. While these figures were not obtained from plants of the same magnitude, or located in exactly the same places, the conditions are so nearly uniform as to location, and figures for gas engines are obtained from plants which are so much larger than the turbine plants compared with them, that it is felt that the comparison is not unjust; in fact, any advantage

* "Turbo-Blowers for Blast Furnace Blowing, Trans. Am. Soc. M. E., 1913.

which would obtain from the character of the plants is entirely in favor of the gas engine.

It is well known that large plants always operate with greater economy than smaller ones.

The gas engine figures are not those obtained from any one location, but are the result of comparison of figures of plants in several locations. In every case where choice of data could be made those results most favorable to the gas engine have been chosen.

In selecting the gas engine installations best adapted for comparison with the steam turbine plant, the best possible examples of recent gas engine practice have been chosen; plants which are in the hands of most capable operators, installed for the purpose of securing the highest efficiency and containing all the various elements for proper operation for such plants. Furthermore, by reason of the care and supervision which is exercised over these plants it is believed that they are, without unnecessary expenditures, now in the best possible condition for service, and maintained at the highest practical efficiency. Furthermore, the physical location of these plants is also favorable, since they are placed at such points as give them readily proper supplies of ore, fuel, limestone, water, and all the other materials necessary for economical operation, and they are equipped with handling devices for storing and transportation of these materials to the fullest practical extent. They are large plants, involving more than four blast furnaces, but in order to bring the plant unit down to one which would be most practical for consideration in new installations they have been reduced to the equivalent of a four furnace plant.

In making this reduction no allowance has been made for a decrease of operating efficiency which would result in the reduction in size. On the other hand, the turbo blower plant which has been selected for comparison is one which is used with only two furnaces. In enlarging it to the four-furnace plant no account has been taken of the increased economics which would result from the increase in size. Therefore it will be seen that the turbo-blower suffers in two directions; first, that the gas engine plants selected for comparison are larger than the plant

which is taken as the standard unit, and second, the turbine plant which is selected for comparison is, in turn, smaller. If these facts were taken into account we should expect that the figures would come out more favorable to the turbine than results actually given; but it is not desired, in making this comparison, to leave any doubt as to the conservatism of the result.

In considering the installation of a gas engine equipment for a steel mill of the type under consideration, the first fact which strikes the investigator is the first cost of the installation. It has not been customary in the past to consider the addition to operating cost which results from the charges necessitated by this capital investment. It is, however, of vital importance in considering the desirability of installation of one type of prime mover or another, that all the elements involved be taken into account in the same way that they are taken into account in other cases involving differences of first cost. It is obvious that the capital invested in such plants must give some return to the investor, and a proper allowance for this return is a just and legitimate charge against operating expense. Furthermore, these investments involve taxes, which also should go against operating expense; and insurance is an item of the same class. Furthermore, and more important than any of these, is the question of obsolescence, by which is meant the amount to be laid by as a sinking fund to retire or amortize the plant at the time when its usefulness becomes extinguished by the improvements in the available apparatus, whether as to efficiency, as to increased reliability, or in other ways; also to provide for the general aging of the apparatus which takes place no matter how carefully the repairs and renewal of parts is taken care of. That is to say, this obsolescence charge which I am now discussing also includes depreciation.

It is, perhaps, not necessary to go too deeply into the necessity of an obsolescence or depreciation charge, but a familiar instance which is often cited, to show the necessity of the charge, is the case of the horse, investment in which is automatically extinguished by the aging of the horse no matter how carefully he is taken care of, kept free from sickness, and otherwise preserved so far as possible in good condition. While the deprecia-

tion of machinery is often not so rapid or so easily seen as in the case of the horse, the two instances are fairly analogous.

If these fixed charges on the investment are not taken care of by charges against operating expense, they must be handled in some other manner, by charges against the product produced by the mills, or otherwise; which charges are wrongly allocated and do not show, unless put into operating expenses, the true value of investment in the various types of apparatus.

In most steel plants it has been the custom to consider merely the running charges. The management has been given the plants to operate, and it has been judged by this cost of operation without including the fixed charges due to investment. This had led to an inaccurate view of the desirability of extreme efficiency in the prime mover and does not consider the cost of obtaining this high efficiency. This leads to a use of the most expensive plant, provided such plant gives a larger output from the gas available without regard to the first cost.

Up to within a short time there has been a considerable difference in the efficiency of utilization of blast furnace gas as between the steam engine and the gas engine, but the latest types of steam turbines permit a steam plant to be operated with the same output of electric power to the mill, while also furnishing sufficient gas for blowing purposes, as plants containing gas engines, by the use of a very reasonable amount of make-up coal, as will be seen later (see Table No. 1, Charges Dollars per year). Therefore, the cost of fuel is one of the smaller considerations in judging the relative merits of these two types of installation; whether the price of coal is high or low the comparison rests on other grounds. Even with less efficient turbines the cost of coal for make-up is only one of the items which enter into the complete cost of operation, and we can make up a proper comparison of gas engine and steam turbine plants by adding both the fixed charges and the running charges in each case, and adding the excess cost of coal in the turbine plant, if any; and that plant which gives the least total with these figures is the better, regardless of its thermal efficiency.

The following analysis includes every element of the operating cost of such plants in detail. Blast furnace and steel mill

plants have established certain arbitrary subdivisions for convenience in cost accounting; blast furnace cost, gas purifying cost, gas power station costs, etc., being kept as independent groups and charges being made from one department to another. These sub-divisions are not used in this paper.

The gas from the furnaces is used for the following purposes:

Blowing the furnaces;

Pumping the necessary water for use about the blast furnace and in the steel mill;

Generating electricity for driving the steel mill and all auxiliary apparatus about the blast furnace plant.

The power and water allocated to steel mill uses per furnace is stated below. If any coal is to be used on account of the insufficiency of the quantity of blast furnace gas to generate the allocated power to steel mill, the cost of this coal will be included.

On this basis complete plants have been laid out for a steel mill as an adjunct to four blast furnaces, one of these plants operated by gas engines and the other by steam turbines. These have been called "Typical Gas Plant" and "Typical Steam Plant," respectively. These plants include a blast furnace blowing station, an electric generating station and a pumping station. The figures used for operation, including the amount of carbon burned in the furnaces, gas supplied, electric power produced, water pumped, etc., are all representative of actual blast furnace and mill conditions. The costs have been carefully collected and adjusted to represent prices ruling in November, 1916.

TYPICAL FOUR-FURNACE GAS PLANT

The figures for this plant are summarized from the details given under Appendix 1.

General Characteristics of Plant: In this plant there is included a gas-electric and gas-blowing station with the necessary steam spares for emergencies. It also includes a boiler house supplying steam for various purposes and fired by gas when it is sufficient, and by coal when it is not. There are also proper gas washing and pumping stations.

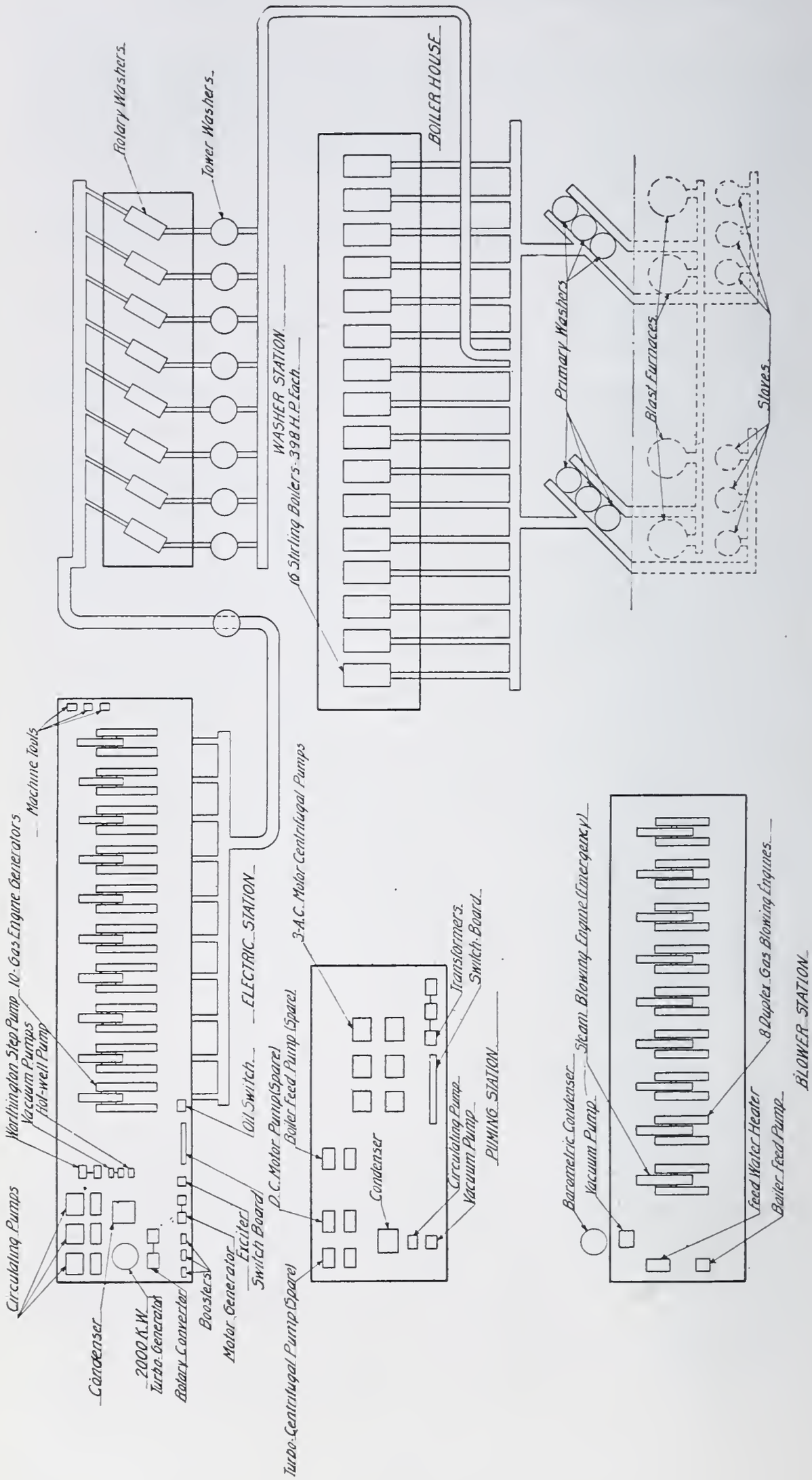

Fig. 4. Gas Engine Plant.

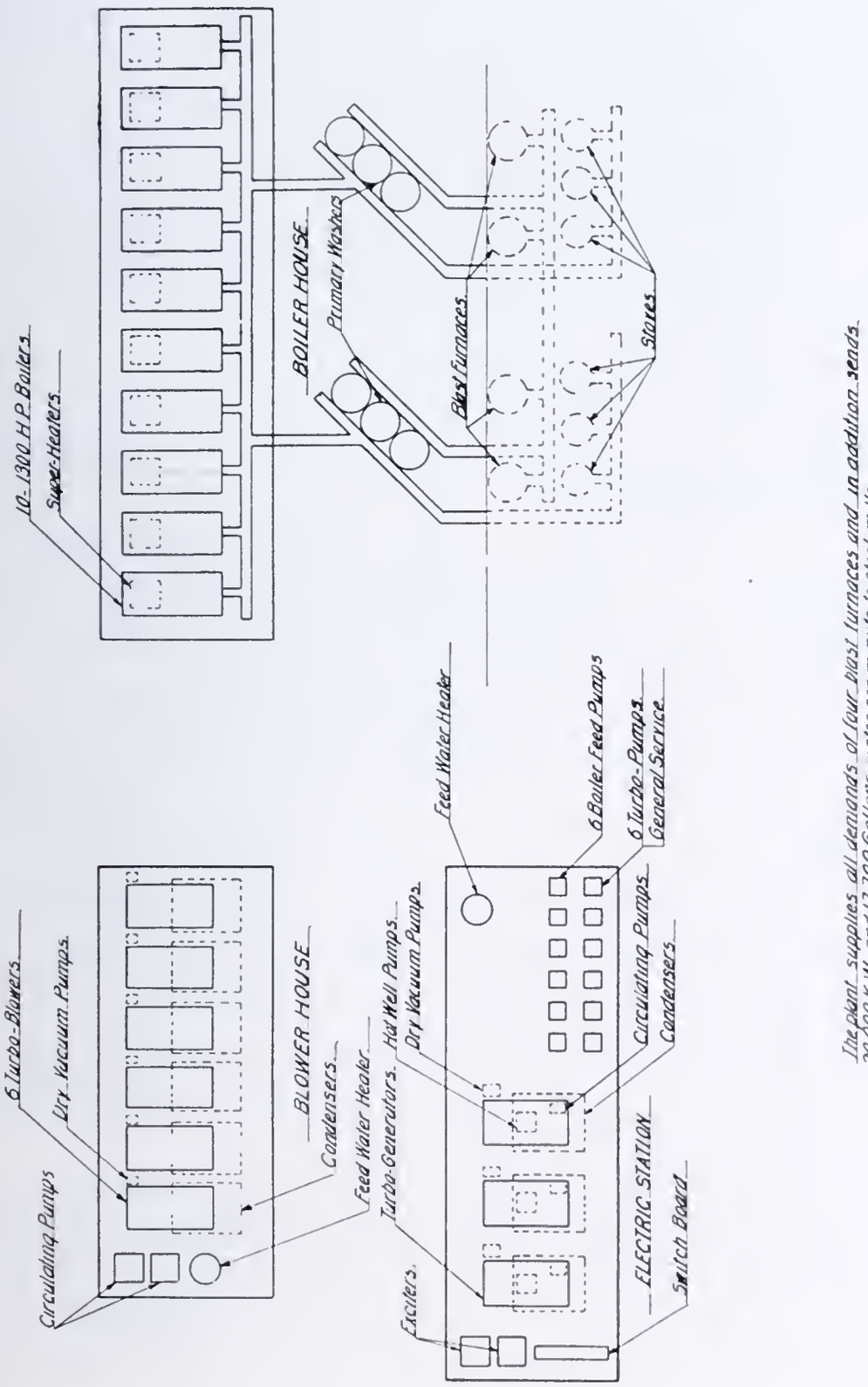

Fig. 5. Steam Turbine Plant.

The plant will be of proper size to supply all the blast furnace demands for air, water, steam and electricity. In addition it will supply during week day working hours, 5000 K.W. per furnace, and 4450 gallons of water per minute per furnace for steel mills. During the time when gas is insufficient to enable the full output of the steel mills to be produced coal will be used for make-up, the cost of which is included in the figures.

Blast Furnace Operation: The carbon burned or gasified in the furnaces is taken at 12 835 short tons per furnace per month. This corresponds to 400 tons of pig per day, with a coke rate of 2100 pounds per long ton, or 500 tons per day with a coke rate of 1700 pounds per long ton.

TYPICAL FOUR-FURNACE TURBINE PLANT

The figures for this plant are summarized from the details given under Appendix 2.

General Characteristics: This plant contains boilers and turbo-generators of sufficient capacity to make the output to steel mills of water and electric power equal to that of the typical four-furnace gas plant previously given.

The power houses will contain six turbo-blowers and three 12 000 K.W. turbo-generators with the necessary auxiliaries including the necessary pumps for supplying all of the water used about the plant, boiler feed pumps, feed water heaters, etc.

The steam conditions will be such as are used in modern electric stations, 235 pounds per square in. gauge, 200 degrees superheat and 28.5 inch vacuum. It turns out that *no coal is needed on the average,* but to equalize poor gas supply, and excess power demands, an amount is used to bring the operation on a par with that of the gas engine plant.

It is to be noted, however, that even with 150 pounds and 28 inches vacuum, a steam plant would make a good showing, of course including the cost of the coal, which would then be greater. The diagrams will show a comparison of operating costs of this plant, as well as the high-pressure plant, with the gas engine plant.

COST COMPARISONS

Comparisons have been made by others between gas engine and turbine plants using estimated figures for the most part.

Such figures started out with an assumed amount of blast furnace gas produced per ton of iron and with a full load test figure for gas engine efficiencies; and practically 100% volumetric efficiency of reciprocating blowing tubs. All such suppositions are avoided in the present comparison. All of the data is secured from plants in actual operation, and this information is used in such a way as to avoid assumptions of fundamental values.

Fixed Charges: Taxes, interest and obsolescence or amortization are included under this head. (Depreciation is supposed to be divided between repairs and maintenance below, and obsolescence.) Fixed charges are taken throughout at 13%. This is a customary figure for gas engine plants. Steam turbine electric stations often use a lower figure in the neighborhood of 11%, therefore, the use of a figure 13% throughout is relatively favorable to the gas engine case. The fixed charges include the following items:

Interest (on bonds or capital invested)	5 percent.
Taxes	1 percent.
Insurance	1 percent.
Obsolescence (amount laid by as a sinking fund to retire or amortize the plant)	6 percent.
	13 percent.

Running Charges: These include operating charges and also charges for maintenance and repairs, so as to keep the plant in first class condition up to the time it is fully amortized.

Total Charges: These are found by adding fixed charges, running charges and cost of coal.

Cost of Coal: Make-up coal is used under emergency conditions and the cost of it is included in the total charges as above mentioned. Coal is taken at $2 00 per long ton delivered at the fireroom door, with 13 500 B.t.u. per pound.

TABLE No. 1

COMPARATIVE COSTS, FOR TYPICAL FOUR-FURNACE PLANTS

First Costs:	*Gas Engine*	*Steam Turbine*
Primary Washers	$131 250	$131 250
Secondary Washing Station	300 000	
Gas Pipe from Boiler House	212 500	
Boiler and Piping	167 500	609 200
Boiler House	41 250	123 750
Electric Station Apparatus	3 250 000	745 600
Electric Station House	250 000	69 200
Blowers, etc	1 812 500	726 416
Blowing Station House	237 500	69 200
Pumping Station, Standpipe, Conduits	787 500	293 484
	$7 190 000	$2 768 100

Charges—Dollars per Year:

Running Charges—	*Gas Engine*	*Steam Turbine*
Primary Gas Washers	2 100	2 100
Secondary Gas Washers	42 000	
Boilers	12 000	52 750
Electric Station	90 000	68 250
Blowing Station	49 500	42 000
Pumping Station	6 000	4 000
Running Charges, Total	$201 600	$169 100
Fixed Charges at 13 percent	934 500	359 800
Coal	21 652	78 352
Total Charges	$1 157 752	$607 252

The running charges of the turbo-blowing apparatus are taken from the actual figures of cost of a turbo-blowing station which had been in use seven years—but adjusted by increasing them 25 percent to represent November, 1916, conditions. The running charges for the turbo-generating apparatus are representative figures from central power stations, similarly adjusted.

Heat Balances of furnace during average week day working hours. There is a margin on the average for fluctuation of gas and load.

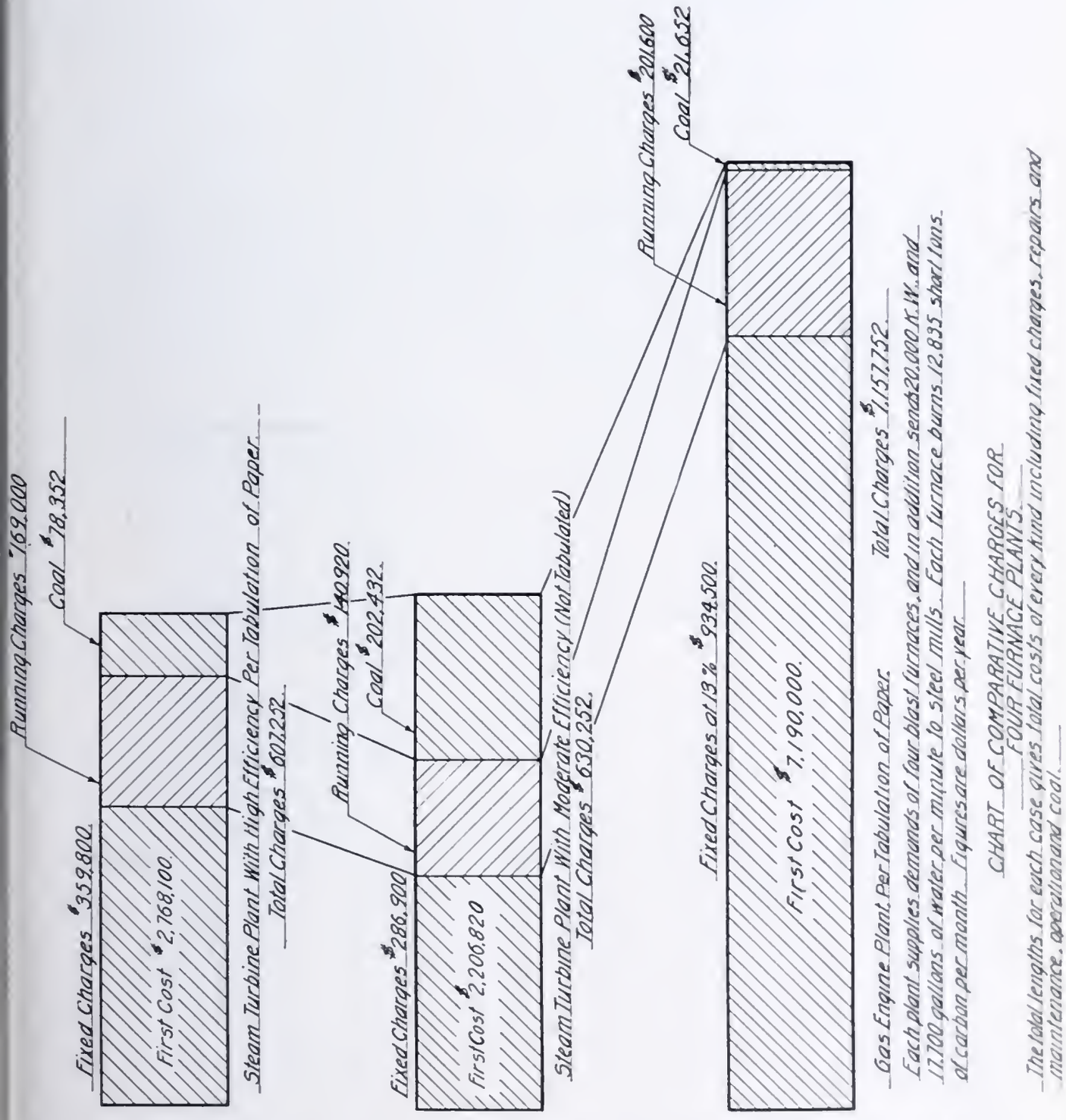

Fig. 6. Comparison of Total Charges for Turbine and Gas Engine Plants.

Gas Engine Plant—

	Million B.t.u. per Hour	*Percent*
Boilers	62	5.8
Electric Station	380	35.3
Blowing Station	88	8.2
Stoves	323	30.0
Margin	223	20.7
	1076	100.0

Turbine Plant—The figures for B.t.u. are divided proportionally to the steam consumption, allowing 70 percent boiler efficiency. These sub-divisions are nearly, but not exactly, comparable with the gas plant, the internal gas washing, electric and steam distribution being different.

	Million B.t.u. per Hour	*Percent*
Pumps and Miscellaneous	81	7.5
Turbo Generators	420	39.0
Turbo Blowers	148	13.8
Stoves	323	30.0
Margin	223	20.7
	1195	111.0
Deduct Heat from Coal	119	11.0
Heat from Gas	1076	100.0

Conclusion—This comparison is based on the best gas engine figures for actual performance which have come to our attention. The use of the figures from another and larger installation (see Appendix) would render the use of make-up coal unnecessary except under circumstances which require its use in either plant.

The results show that in the plants under discussion the gas engine plant will cost nearly four and one-half million dollars in excess of the steam turbine plant; or in other words, its first cost will be 260% of the steam turbine plant. The operating cost will be about $550 500 per year more in case of the gas-plant, or the ratio of operation costs will be

$$\frac{1\,157\,752}{607\,252} = 1.91$$

On the usual basis of computation used in considering the advisability of installing more economical units in our central power stations, the saving to be realized by the use of the steam plant would justify an excess first cost of $5 505 000, whereas the steam plant actually costs $4 422 000 less.

No matter what differences of opinion or of fact due to locality or type of installation may be applied to these figures, it may be accepted as certain that wherever fixed charges are assessed against the power plant, the steam turbine will always show a heavy balance in its favor.

In addition, we have in favor of the steam plant a closer regulation of blast volume, and of electric voltage; a greater reliability and ease of handling, and a greater flexibility in operating conditions. These are points of the highest importance, which will result in a larger volume of output from furnace and mill, and of a more uniform quality.

APPENDIX I

TYPICAL FOUR-FURNACE GAS ENGINE PLANT

GENERAL OPERATION

Location: The plant is located on a river or a great lake, and includes apparatus for unloading ore from barges, stocking it, and delivering it to the furnace. The plant uses water direct from the lake without purification. A water intake system and stand pipe is included with pumps for blast furnace, washing, and power house water, and water to steel mills.

Gas Supply: Almost the entire power of the plant is supplied by gas from the blast furnaces. This operates gas blowing and gas electric engines, as well as steam boilers, which furnish the steam required about the plant and blast furnaces, and for steam emergency spares. The minimum gas is not quite sufficient for all purposes, however, and a small amount of coal is burned under the boilers. The gas from the furnaces is led to primary washers. From these some goes to stoves and some to the secondary washers, and thence to the gas engines.

Equalization of Gas Supply and Demand: The gas from the blast furnaces, of course, varies from time to time. The load on

the blowing engines also varies somewhat. The gas electric engines supply steel mills, etc., with very great variation of load. Hence there are frequent periods when gas supply is greatly in excess of gas demand, and other periods when there is a deficiency. There are two gas holders which store a considerable amount of gas. This amount is really insignificant, however, compared with the total gas output of the furnaces. There is a battery of power plant steam boilers supplying steam for miscellaneous purposes, and further adjustment is effected by turning steam on or off of them. There are also storage batteries in some gas plants, but these are here omitted. There is a gas dispatcher who is regulating the gas distribution at all times. If there is an excess of gas, the holders are allowed to rise and as much gas as possible is sent to the boilers. If there is any further excess, the dispatcher closes throttle valves in the gas mains, which increases the stove and furnace pressure, and causes gas waste through the stoves. If the gas supply further increases, gas bleeders are opened. On Sundays steel mills are not running, so there is light electrical load, and gas bleeders are then open all of the time. This system, of course, involves considerable inevitable waste of gas, but it is, nevertheless, probably as good as could be devised. When the gas supply becomes low, gas is cut off the power plant boilers and coal is used to keep up steam. If there is further decrease in gas supply, the gas dispatcher signals the electric load dispatcher to shut off some of the mill circuits during the period of low gas. This shutdown of mills happens occasionally during normal times, and happens frequently when the mills are busy.

Emergency Apparatus is provided throughout. Spare steam boilers can be started up, and some turbo-generators, blowing engines and pumps driven by steam if occasion arises. There are also emergency electric circuits.

TABULATION OF FOUR-FURNACE GAS ENGINE PLANT

Primary Washers: Two (one for each pair of furnaces), each consisting of three towers about 30 ft. dia. with inlet gas piping, outlet gas piping, water piping and gravity basins.
Water used from pumping station. 5.35 million gals. per mo.

Water used from blast furnace jackets	201.50	million gals. per mo.
Water used, total	206.85	million gals. per mo.
First cost		$131 250
Running charges (no water)		2 100 per year

Gas Pipe Lines: From boiler house, to gas washer station, and to electric and blowing station.

First cost $212 500

Secondary Gas Washer Station:

Eight tower washers,
Eight rotary washers with 150 h.p. motors,
Internal gas pipe lines,
Gas holder,
Regulation valves,
Water pipe lines.

Water from pumping station	124.9	million gals. per mo.
Electric power used	850	kw.
First cost	$300 000	
Running charges (no power or water)	42 000	per year

BOILERS, BOILER PIPING AND BOILER HOUSE

These boilers serve as a balance wheel between gas supply and power demand, and supply steam tabulated below about the blast furnace plant. They also can supply steam for blowing and pumping emergency steam spares, and half of the boilers are not regularly used, but in reserve for this purpose.

Steam Used, in Million Lbs. per Mo.:

Tests of steam pump spares	1.02
Tests of steam blower spares	4.58
Electric station steam turbines	23.57
Power station miscellaneous	2.13
Gas washer station miscellaneous	0.47
Blast furnace miscellaneous	9.47
Total steam	41.24

Total feed water (with 3% leakage)—

$$41.24 \frac{1.03}{8.33} = 5.105 \text{ million gal. per mo.}$$

Total coal used in addition to gas—

8661 long tons per yr., at 13 500 B.t.u.

Total heat for initial pressure of 144.5 lbs. abs.,	1193 B.t.u. per lb.
Heat of liquid for feed water, 90 deg. F.....	58
Heat added in boilers.....	1135 B.t.u. per lb.

Heat consumption of boilers at 70% efficiency—

$$1135 \frac{41\,240\,000}{730 \times 0.7} = 91.6 \text{ million B.t.u. per hr.}$$

Heat from coal—

$$\frac{8661 \times 2240 \times 13\,500}{12 \times 730} = 29.9 \text{ million B.t.u. per hr.}$$

Heat from gas.....91.6 — 29.9 = 61.7 million B.t.u. per hr.

Coal cost at $2 per ton and 50c firing.....$21 652 per yr.

6400 H.p. of Boilers:

64 000 sq. ft. heating surface, first cost.....	$ 88 750
Gas pipe lines in boiler house, first cost.....	16 250
Steam and water piping boiler house, first cost.....	62 500
Boilers and boiler piping, total first cost.....	$167 500
Boiler house, first cost.....	41 250
Boiler running charges (no water, fuel or firing), per yr.	12 000

Electric Station: There is a main *AC* circuit supplied by gas engines and carrying the main load. There is also an auxiliary *AC* circuit supplied by gas engines (with a steam turbine floating on the line at light load for emergencies) supplying pumping and gas washing stations only. There is a *DC* circuit supplied by gas engines and having a rotary converter tied in. This circuit supplies various motors and one emergency spare pump in the pumping station.

Jacket water used per month..... 299.6 million gals.

Power Distribution in K.W.

(This is for week-day working hours, and gas supply has some margin on the average. There is some waste of unburned gas through stoves when gas is good, and some shutdown of external mill circuits when gas is bad. We do not consider Sunday operation, when many mills are shut down and gas wasted through bleeders.)

	Kw.
Blast furnace boiler lights	3
Ore unloaders	146
Ore bridges for stocking	166
Ore bridges for blast furnaces	208
Blast furnace use	204
Blast furnace, total	727
Pumping station	1 800
Gas washing station	850
Blowing station	57
Electric station, miscellaneous	650
Blast furnace and power house, total	4 084
Steel mills	20 000
Total power	24 084
Steam turbine power	725
Gas engine power	23 359
Total power	24 084

The steel mill power in one plant for which complete figures were obtained was 4718 kw. per furnace, but other plants claim efficiencies such as will give 5000 kw. to steel mills per furnace, and this figure is used to favor the gas engine as much as possible. The gas engines at average load require 16 250 B.t.u. per kw.-hr., corresponding to an efficiency of

$$\frac{3410}{16\,250} = 21\%$$

This is a test figure for the best of the plants investigated. Another good plant gave 17 630. The best figure is used in order to favor the gas engine.

Total heat in gas for gas engines during week-day working hours—

$$23\,359 \times 16\,250 = 380 \text{ million B.t.u. per hour.}$$

Apparatus in Electric Station

30 000 k.w. of gas engines total, with generators, exhaust and gas piping, oiling and ignition system, etc.,

Oil switches and switchboards,

Motor generator, exciter and booster sets,

2000 kw. rotary converters,

2000 kw. steam turbine, with condenser, pumps, etc.,

Machine shop for engine repairs,

Gas engine spare parts.

First cost of above apparatus	$3 250 000
First cost of electric station house	250 000
Running charges of electric station (no water or gas), per year	90 000

Blowing Station for Four Furnaces

Cubic feet displacement per pound of carbon burned, 74. This allows for time out, stove loss and carbon in all furnace materials.

Water from pumping station	77.3 million gals. per mo.
Electric power required	57 k.w.

Blowing engine gas consumption, 8534 B.t.u. per gas I.H.P.-hr. This is a test figure for the best plant investigated, which plant has very limited overload capacity. Another plant gave 15 000.

Average ratio of theoretical adiabatic air card to gas indicator card, 0.844.

Air tub displacement per furnace—

$$\frac{12\,835 \times 2000 \times 74}{730 \times 60} = 43\,400 \text{ cu. ft. per min.}$$

Average theoretical power for adiabatic compression (at 15 pounds) =

5 h.p. per 100 cu. ft. of air per min.

Gas engine I.H.P. per furnace—

$$\frac{434 \times 5}{0.844} = 2571$$

Gas engine heat consumption—

$$8534 \times 2571 \times 4 = 88 \text{ million B.t.u. per hr.}$$

First cost of blowing station house	$237 500
Running charges of blowing station (no water, power or gas), per year	49 500

Apparatus in Gas Blowing Station

Eight duplex gas blowing engines (1½ engines per furnace given outfits for 5 1/3 furnaces),

Exhaust and gas piping, oiling and ignition systems for same,

Steam blowing engine for furnace for emergency,

Barometric condensers and pumps,

Gas engine spare parts.

First cost of above apparatus	$1 812 500
First cost of blowing station house	237 500
Running charges of blowing station (no water, power or gas), per year	49 500

Pumping Station:

Water Distribution in Mil. Gals. per Mo.

Primary washers	5.35
Secondary washers	124.90
Boiler feed pumps	5.11
Electric station	299.60
Blowing stations	77.30
Blast furnaces	480.75
Total internal water	993.01
Total external water	785.60
Total water	1 778.61

Total water—

$$\frac{1778.61 \times 1\,000\,000}{730 \times 60} = 40\,500 \text{ gals. per min.}$$

Total steel mill water, per furnace.....4450 gals. per min.
Total power (including that for external water).....1800 k.w.

Apparatus in Pumping Station

Steam turbine-driven centrifugal pump for spare, with condensing apparatus,

Centrifugal pump, *D.C.* motor driven, for spare,
Boiler feed pumps,
Three *A.C.* motor-driven centrifugal pumps,
Switchboards and transformers.

First cost of pumps and station, including water intake, conduits, stand pipe and mains.....	$787 500
Running charges of pumping station, per year.....	6 000

Furnace Operation: The carbon balance for four furnaces is as follows: The figures for long tons of carbon per month are obtained by multiplying the weights of the various material by the carbon percentage.

	Long Tons Carbon per Month. Four Furnaces.
Carbon enters furnace from the following:	
Sintered flue dust.....	212
Flue dust screenings.....	73
Limestone.....	2 924
Coke.....	46 313
	49 522
Carbon leaves furnace from the following:	
Pig.....	2 530
Flue dust in dust catchers.....	729
Flue dust in raw gas.....	182
CO_2 in washer water.....	241
Carbon present in gas, by difference..	45 840
	49 522

The figures of 45 840 long tons for four furnaces gives 12 835 short tons per furnace per month.

The gas analysis is as follows:

	%
CO	26.2
CO_2	12.9
CH_4	0.1
C = Sum of gases containing carbon	39.2
H_2	3.5
N_2 = Nitrogen by difference, N	57.3
	100.0

Lower or net heating value of gas, 95.5 B.t.u. per cu. ft.

From the gas analysis the air and gas can be computed by the following formulae, the values being cu. ft. at 14.7 lbs. per sq. in. and 60° F. temperature:

$$\text{Cu. ft. of air per lb. of carbon} = 39.6\,\frac{N}{C} = 57.9$$

$$\text{Cu. ft. of gas per lb. of carbon} = \frac{3140}{C} = 80.1$$

Counting 730 hours per average month, total heat in gas—

$$\frac{12\,835 \times 2000 \times 80.1 \times 95.5 \times 4}{730} = 1076 \text{ million B.t.u. per hr.}$$

APPENDIX II

TYPICAL FOUR-FURNACE STEAM TURBINE PLANT

General Operation: The location and general characteristics of the plant are the same as for the gas plant already described. The internal distribution of power and water is of course different, but the gas from furnaces, air for blowing, and steel mill power and water supplied, are the same.

The boilers are arranged to burn coal, as well as gas. However, coal is not required on the average on account of the good efficiency of the steam units. Nevertheless, when gas is bad or when power demand is excessive some coal will be used, and an amount is used in addition to the amount used in the gas plant to give a margin during average working hours on par with the

gas plant. The boilers are considerably larger than is the case of the gas plant, and have considerable heat storage capacity to equalize gas fluctuation, so that the margin is not made as great. Steam is 235 lbs. per sq. in. gauge, 200° superheat and vacuum is 28½ in. average.

There are circulating pumps directly adjacent to the generator and blower turbines, and not included in the general pumping system. The general system has non-condensing, steam-driven, high-speed turbo-pumps which heat feed water. The boiler feed pumps are motor driven.

The centrifugal blowers are equipped with constant volume governors so as to give steady furnace condition. There is undoubtedly a better coke rate when this is done. There is also no necessity for the careful attention to the gas quality necessary for the gas engine plant, and the coke rate may be diminished on this account. However, such advantages are here ignored for conservatism, and the same amount of carbon is burned in the furnace as in the gas plant.

TABULATION OF FOUR-FURNACE TURBINE PLANT

Electric Station: There are three turbo-generators, rated 12 000 kw. continuous load, two operating and one spare, with one 200 kw. motor generator and one turbo-generator for exciters and motor-driven circulating and hot well pumps, and a non-condensing dry vacuum pump.

The internal power distribution differs from that for the gas plant, owing to the use of steam apparatus where convenient, instead of motor-driven apparatus.

Electric Power Distribution for Four-Furnace Turbine Plant

	Av. KW. During Working Hours
Ore unloaders, blast furnace, etc., as in gas plant	727
Exciter losses	50
Circulating and hot well pumps	440
Boiler feed pumps	171
Total, blast furnace and power house	1 388
Steel mills as in gas plant	20 000
Total	21 388

Each generator will require 75 kw. net for excitation, but this is provided for in the water rate. Water rate for average load, 12 lbs. steam per kw.-hour.

Average steam consumption of turbo-generator—

$$12 \times 21\,388 = 256\,600 \text{ lbs. per hr.}$$

Steam consumption of dry vacuum pumps (non-condensing), 4000 lbs. per hr.

Condensing water—

$$\frac{70 \times 256\,600}{60 \times 8.34} = 35\,900 \text{ gals. per min.}$$

Electric Station Apparatus and First Cost

Three turbo-generators, at $143 750	$431 250
One motor-generator set	5 625
One turbo-generator spare	6 875
Three circulating pumps and motors, at $8125	24 375
Three hot well pumps and motors, at $1250	3 750
Three dry vacuum pumps, steam driven, at $3125	9 375
One open-feed water heater	12 000
Three surface condensers, at $32 500	97 500
Interpiping, relief valves, etc	22 500
Switchboards, oil cells, etc	75 000
Steam piping, etc	57 350
Total first cost, electric station apparatus	$745 600
First cost of electric station house	69 200
Running charges of electric station (no water or steam) per year	68 250

Blowing Station: There are six turbo-blowers, one for each furnace and two spares, with condensing circulating pumps and non-condensing dry vacuum pumps.

Carbon burned in each furnace	12 835 short tons per mo.
Cu. ft. air per lb. carbon	58.1
Leakage—Time out and stove loss allowance	3%

Cu. ft. air per min. per furnace—

$$\frac{12\,835 \times 2000 \times 1.03 \times 58.1}{730 \times 60} = 35\,000$$

Steam consumption of high-efficiency centrifugal compressor at 15 lbs. air pressure, 100 cu. ft. air..1.08 lbs. steam

Steam Consumption of Blowers

$350 \times 1.08 \times 60 \times 4$	90 800 lbs. per hr.
Steam consumption of circulating pump...	6 600 lbs. per hr.
Steam consumption of dry vacuum pumps.	6 000 lbs. per hr.
Turbo-blower circulating pump water— $\frac{70 \times 90\,800}{60 \times 8.34} =$	12 700 gals. per min.
Turbo-blower cooling water	1 200 gals. per min.

Blower Station Apparatus and First Cost

Six turbo-blowers, at $90 000	$540 000
Two turbo-circulating pumps, at $7033	14 066
Condensers and dry vacuum pumps	110 000
Feed water heater	5 000
Blowing station piping	57 350
Total first cost, blowing station apparatus	$726 416
Blowing station house, first cost	69 200
Running charges of blowing station per year	42 000

Pumping Station: There are non-condensing turbo pumps for general service, the steam from which heats boiler feed; and motor-driven boiler feed pumps.

Water Distribution, Gals. per Min.

Boiler feed make-up and general losses	428
Blast furnace water	10 892
Turbo-blower water	1 200
Total internal water	12 520
External water same as in gas plant	17 800
Total water from general pumps	30 320
Turbo-generator circulation pumps	35 600
Turbo-blower circulation pumps	12 700
Total water	78 620

Steam consumption of non-condensing general service pumps ..... 32 700 lbs. per hr.

Pumping Apparatus (Exclusive of Circulation Pumps)

Turbo-pumps for general service, with spare.....	$42 234
Boiler feed pumps, with spares (motor driven, 171 kw.)	14 750
Pumps, total first cost.....	$56 984

Pumps will be located in electric and blower station, so that no separate house is required.

First cost of water intake, conduits, stand pipe and mains	$236 500
Pump running charges, per year.....	4 000

STEAM CONSUMPTION TABLE

Non-Condensing Units	*Lbs. per Hr.*
General service pumps	32 700
Generator dry vacuum pumps	4 000
Blower dry vacuum pumps.....	6 000
Non-condensing total	42 700
Blower circulating pumps.....	6 600
Pump and miscellaneous total...	49 300
Turbo-generators	256 600
Turbo-blowers	90 800
Total steam	396 700

The non-condensing steam is sufficient to heat the feed water to about 200° Fahr.

Total heat of steam at 250 lbs. at 200° superheat	1314 B.t.u. per lb.
Heat of liquid at 200°.....	168 B.t.u. per lb.
Heat added in boiler.....	1146 B.t.u. per lb.

Boiler efficiency on basis of gas with primary washing 70%

Hence the heat which must be supplied by the gas is found by multiplying the above figures for steam consumption in pounds per hour by 1146 ÷ 0.7.

TABLE OF HEAT NEEDED IN GAS

Pumps and miscellaneous	81	million B.t.u. per hr.
Turbo-generators	420	million B.t.u. per hr.
Turbo-blowers	148	million B.t.u. per hr.
Total	649	million B.t.u. per hr.
Heat in gas, as in gas engine plant	1076	million B.t.u. per hr.
Heat in gas to boilers, allowing 30% to stoves, 0.7 × 1076	753	million B.t.u. per hr.
Total heat needed	649	million B.t.u. per hr.
Margin with no coal	104	million B.t.u. per hr.

Hence the average gas is sufficient for the average load with some margin.

The margin in the gas engine plant for fluctuation of gas and load is 223 000 000 B.t.u. per hour. Owing to the heat storage capacity of the boilers, the steam plant can tide over a period of heavy load on low gas, and probably with the margins as given the two plants will be on par. However, in order to favor the gas engine plant we will burn enough coal to make the two margins equal, requiring 119 000 000 B.t.u. per hour. The only time when the margin may be required is during week-day working hours, or 300 days of the year.

Cost of Coal for Steam Plant Margin

$$\frac{119\,000\,000 \times 2.00 \times 24 \times 300}{2240 \times 13\,500} = \$56\,700 \text{ per year}$$

Cost of coal for gas plant	21 652	per year
Total cost of coal for steam plant	$78 352	per year

$$\text{Boiler h.p.} = 396\,700 \quad \frac{1146}{334\,800} = 13\,560$$

Using boilers at 150% rating would require ten 1300 h.p. boilers installed.

First Cost of Boiler House Apparatus

Boilers	$316 250
Superheaters	56 700
Gas pipe lines in boiler house	48 750
Steam and water pipe	187 500
Total first cost of boilers	$609 200
First cost of boiler house	123 750
Boiler running charges	52 750

DISCUSSION

Mr. Alex. L. Hoerr:* It is not necessary to agree with everything Mr. Rice has said in order to recognize that his paper is very complete and very ably prepared.

I would personally question some of the statements made regarding the advantage in an operating sense, of the turbo blower over the reciprocating engine. In an engine driven plant the pulsations are almost eliminated by the large volume of the blast lines and stoves. When the snorter valve, which is on the engine side of the stoves, is opened the pulsations are very marked but when a tuyere cap is removed for blowing the sound is sustained and almost free from any suggestion of periodic pulsation.

The advantage claimed in the matter of dust can also be questioned.

At one plant, where a furnace was blown alternately by engines and blowers, it was found that the amount of dust made did not depend on the type of blowing machinery used but was up and down with both types, apparently governed by other than blast variations.

The only criticism to be made in connection with the boiler efficiencies used in the paper is that they are too low.

*Chief Engineer, National Works, National Tube Company, McKeesport, Pa.

With the high pressures and the superheat proposed, 70% efficiency is quite a little below what it is reasonable to expect. Boilers are now being operated continuously at 70% with 140 lb. pressure and no superheat. To secure 6 to 8 percent better efficiency under the conditions named by the author, does not seem at all impossible.

Mr. Frederic Ottesen:* It has been my privilege for the last fifteen years to be in constant touch with the gas engine industry in this country, and it is only natural that I should follow with great interest, the reading of a paper of this kind. I regret, however, that the time between the reading of the manuscript and the presentation of the paper was so short that it is impossible to discuss in detail, all of the data given therein. I, therefore, think it would be of more benefit to the fraternity and those who are directly interested in a subject of such great importance as this one, to defer the discussion of the paper to a later meeting in order that all may have ample time to study the question at issue.

The problem before us tonight is not an entirely new one. It has been thrashed out pretty well before and I strongly recommend to every one who is interested in this subject, before forming an opinion in this matter, to read H. J. Freyn's paper, presented before the American Iron and Steel Institute, May, 1913, and also Arthur West's paper, presented at the same meeting.

It requires men directly connected with steel manufacturing companies to collect exact and reliable data, and, in referring to the papers presented before the American Iron and Steel Institute, I wish to emphasize the fact that Mr. Freyn was for several years connected with the United States Steel Corporation and devoted a great deal of time and study to the problem of gas engine power for steel mills both in this country as well as abroad. I also wish to emphasize that Mr. West, for many years, has been Manager of the Power Department of the Bethlehem Steel Company, and has had a most excellent opportunity to study the

*Chief Engineer, Gas Engine Department, Mesta Machine Company, Pittsburgh.

relative merits of the different types of prime movers in the various plants which they own and operate.

I shall not go very much into the vast amount of detail contained in the papers presented by these gentlemen. I only wish to touch upon the conclusions.

Mr. Freyn states that in the case of the steel plant at Gary, Indiana, coal of 10 500 B.t.u. per pound would have to cost only forty-two cents per gross ton at Gary in order to reduce the saving, due to installation of gas engines, to nothing, and to make the steam turbine installation commercially equivalent to the existing gas engine installation.

Mr. West in closing his paper says: "It will be seen that the turbo plant would have to be put in for nothing in order to make power in competition with the gas engines, when the gas engines are charged with all the operating, repair, supply and fixed charges, which experience at Gary has shown belong to them.

"It is a consideration of figures like these which has caused our Bethlehem plant to go over to gas power exclusively, which is now the case. We cannot afford the use of steam turbine except in cases where waste heat, which cannot otherwise be utilized, can be made use of in the steam turbine."

Mr. West further states: "It may be noted that when we started on our gas engine installation our coal bill at the Lehigh plant was more than one million dollars a year. I am happy to say that this coal bill has been entirely wiped out."

These are strong and broad statements made by men who have had all the facilities at hand, for a correct determination as to the relative merits of the two types of prime movers.

Now, as to the first cost of installing gas engines, Mr. Freyn states, that a gas engine installation cost 50% more than a steam turbine installation of the same capacity, whereas, Mr. Rice in this evening's paper states that the gas engine plant cost 260% of the steam turbine plant. Who is right and who is wrong in his statement?

If Mr. Rice is so widely off in the figures of first cost, it really is useless to even try to compute the cost of operation, as

the latter is a function of the former, when all charges are considered.

In arriving at the cost of a four-furnace gas plant, Mr. Rice has used data obtained from plants consisting of more than four furnaces and by some "factor of transformation," which he does not tell us anything about, reduced it to a four-furnace plant, and by further "adjustment," as he calls it, brings the cost of such a plant up to the "war prices" of 1916.

I can see no reason, in dealing with a technical question of this kind, why it should be necessary to "adjust" the cost of plants already built and in operation to the present abnormal high cost, unless we are to assume that the war will last forever.

Mr. Rice, in adjusting the four-furnace turbo plant, uses 25%, but he does not state what adjustment the gas plant has been subjected to. He has done a striking injustice to the gas plant in adjusting its first cost to the present war prices, without adjusting the cost of coal for the turbo plant selected for comparison. When proper correction is made in this item, you will find that the coal bill for the turbo plant will be increased approximately 250%.

In describing the typical four-furnace gas plant, Mr. Rice selects eight twin tandem gas blowing engines, 1-1/2 engine per furnace. In other words, the six twin tandem engines are blowing the furnaces, with two twin tandem engines as spares. This is the most expensive way of selecting the gas blowing units he could possibly arrive at and one which does not conform at all with present day practice.

In these later years when modern installations are made, two single tandem gas blowing engines are used for blowing a 500 ton furnace and one single tandem engine as spare for every two furnaces. The four-furnace plant in question would, on this basis, be equipped with ten single tandem gas blowers instead of eight twins. In other words, there would be only sixteen gas cylinders and eight air cylinders in operation under normal conditions, as against twenty-four gas cylinders and twelve air cylinders in the case which Mr. Rice refers to.

The single tandem type costs considerably less to install and operate than the twin tandem units, and I, therefore, wish

to correct Mr. Rice's statement, that he has selected for comparison with the steam turbine plant, the best possible examples of recent gas engine practice.

In comparing the cost of installing a turbo-electric plant, with the cost of a gas electric plant, we find that Mr. Rice has carefully itemized the cost of the former and managed to get the cost down to a very low figure in spite of the "25% adjustment" referred to above.

When dealing with the cost of the gas electric station he is quite liberal in his expenditures. Without itemizing anything he sets down $3 500 000 and lets it go at that.

We find that the gas electric station has to have 2000 kw. rotary converters, a 2000 kw. steam turbine with all of its auxiliaries plus a "machine shop for engine repairs."

Are we to infer from this that the steam turbine electric plant does not need any repairs, nor such luxuries as 2000 kw. rotary converters?

In arriving at the cost of the four-furnace turbo plant, Mr. Rice chooses an existing plant, and with some "factor of transformation" brings it into the desired capacity. Then, before figuring the operating cost of the plant he passes it through some other form of transfiguring, namely, of increasing its economics from that which corresponds to a steam pressure of 150 pounds to the economics corresponding to 235 pounds steam pressure, 200 degrees superheat and 28.5 in. vacuum, a condition which is very rare in steel mills in this country today. However, as to this method of "transfer" we are kept in the dark.

In view of this and other undetermined quantities, inconsistencies, and apparent erroneous handling of the matter, it is rather impossible to intelligently discuss and crystallize in our minds the relative merits of the two types of prime movers.

Let the fellows in the other end of the line, our customers, decide which is the better. When this country's largest and most prominent steel manufacturers, like the United States Steel Corporation, Bethlehem Steel Company, Lackawanna Steel Company, and others, who employ the very best managing and engineering brains they can possibly get for money, together with squads of efficiency engineers, operating engineers, superintend-

ents, accountants, etc., decide to install gas engines in their mills, then, this is significant of something.

The fact of the matter is this, that in this very year, 1916, there were more large gas engines bought for steel mills in this country than any other year in its history. Millions of dollars are being invested in this type of prime mover by the steel manufacturers referred to, which fact must mean one of two things:

Either Mr. Rice is correct in the figures he arrives at in his paper and these selected engineers, who are right at the front, who are confronted with this very problem every day of the year, are wrong, and are throwing their company's and their stockholders' millions to the wind; or, on the other hand, they are right and Mr. Rice is wrong in his conclusions.

In dealing with problems of this kind, I would like to see a committee appointed consisting of the best qualified men that can be found, men who are broadminded and of an unbiased opinion, and who co-operate with bodies like the American Iron and Steel Institute, the American Society of Mechanical Engineers, and all the different Engineer's Societies and Steel Industries in the country.

The findings of such a committee would be worth something, and would be available to all. Let us hope that someone will make a start in this direction—Why not the Engineers' Society of Western Pennsylvania?

Now, coming back to this evening's paper, I do not wish to convey the impression that steam turbines should not be used at all and gas engines are the only prime movers worth considering—be it far from me to assume such attitude.

The steam turbine has its great field of usefulness, and so has the gas engine. However, there need not be very great confusion as to the commercial application of either type of prime mover.

We all know how splendidly the large 30 000 kw. steam turbine units adapt themselves to the gigantic central power stations such as are found in New York, Chicago, and other places, where every square inch of ground is worth a "gold brick" and where no blast furnace waste gas is available. We also know, that for an isolated blast furnace plant, without rolling mills,

and where there is a great amount of surplus gas available, with no means of disposing of the power which could be developed therefrom, there is no need of going to the extra expense of installing gas engines in such a plant. But for such plants as the one we are considering here tonight, where it is up to the management to most carefully balance the available heat in the surplus gas against power demand, so that no coal need be bought, I consider it poor engineering to select the prime mover which uses twice as much fuel as the other. The installation of gas engines in such a plant is without question the proper thing to do. But you will also find, in this plant, that a good deal of waste heat is available from open hearth, heating furnaces, etc., for the generation of steam, and with heavy fluctuations in load, as is the case with motor-driven rolling mills, I consider it an excellent combination to have a steam turbine floating in on the power line with the gas engines, for the purpose of taking care of the "high peak loads."

When it comes to the question of blowing equipment for the plant which we are considering, I will say that I cannot possibly think of a more inefficient apparatus than a centrifugal compressor for this purpose. The very nature of it is such that it has a low efficiency to begin with, even under ideal conditions of operation. As soon as a change takes place, either in pressure or delivery, its efficiency falls to pieces.

This inherent defect does not exist in a reciprocating blowing engine. Its efficiency changes very little with the changes in pressure and delivery within the range of ordinary blast furnace operation. Mr. Rice lays great stress on the point of the turbo blower's superiority over reciprocating engines as to the steadiness of blast pressure.

We all know that a blast furnace has a tendency "to hang" from time to time and it is a question, in my mind, whether this superior steadiness of blast will tend to improve that condition. I am rather inclined to believe that the contrary, or a little agitating caused by a slight variation in pressure would be rather beneficial.

In regard to Mr. Rice's statement as to the increase in furnace output, decrease in ore dust, and coke consumption, by

using turbo blowers instead of reciprocating engines, I cannot help but feel that this is more or less of a sales talking point.

I wish, however, in this connection to refer you to the discussion on Mr. Rice's paper read before the American Institute of Mining Engineers, October, 1914, where H. S. Braman stated: "The air necessary to make a ton of iron in one furnace was 4 362 lbs. with a turbo blower, and on the furnace with a reciprocating engine 4 062 lbs. of air." A difference of 300 lbs. of air per ton of iron in favor of the reciprocating engine. He further states: "Another thing we noticed with the reciprocating engine is that the furnace makes dust only during times of high pressure, but on the turbo blower the furnace makes dust all of the time, high or low pressure."

Permit me also to refer you to another paper read before the American Iron and Steel Institute in 1914 by H. A. Brassert, Supt. of Blast Furnaces, Illinois Steel Company. In dealing with the question of blowing apparatus he says: "With the gradually increasing cost of coal mining and the growing tendency to make economical use of the surplus gas, the gas engine will continue to enlarge its field of usefulness. The steam turbo blower may conquer a position in the localities least favorable to gas engines, owing to its low cost of installation, small space requirement and simple operation. However, practice has not yet definitely proved that it will deliver as constant a supply of air as the reciprocating engine, particularly when fine ores are used, and the resistance in the furnace is subject to considerable and sudden variations."

I am sure Mr. Rice will reply to these remarks by telling us that what I have reference to are older installations, and that considerable progress has since been made in the turbine equipment. I am pleased to know that. I like to see things progress. And I am also happy to tell you that great progress has been made in the gas engine field of later years in the way of increased capacity of the units. It is now possible, and the time will come soon, when there will be on the market 5000 kw. blast furnace gas engines instead of 2500 to 3000 kw. as is now the case. This will simplify and cheapen the installation materially, and make gas power still more desirable. The class of engines in question

is the "scavenged and pressure charged" type which is now in commercial use on the continent.

Before closing I wish to refer to one more point in this evening's paper, and that is where Mr. Rice states, that in a previous paper he showed that the reciprocating steam engine is considerably less economical than a turbo blower and of about the same first cost, and, therefore, need not be considered in any discussion of this character.

I had the pleasure of being present on that occasion and, must say that the discussion which followed did not convey to me, nor anybody else, the impression that the turbo blower had the steam blowing engine completely discredited.

On the contrary, compute the ratio of steam blowing engines installed this year to that of the turbo blowers and you will find that the steel plants are still considering, and, I predict, for a long time to come, will continue to consider, and install reciprocating steam blowing engines in preference to turbo blowers.

In one of the very plants referred to in this evening's paper, where Mr. Rice is obtaining such wonderful results with turbo blowers, the plant is in need of more blowing equipment. In the inquiry, however, this customer asks for reciprocating steam blowing engines of the same type and capacity as those which replaced turbo blowers at some other plant where, several years ago, they made a rather disastrous appearance.

I repeat what I said before, "Let the customers decide for themselves and let us by all means, get an unbiased committee started."

Mr. A. N. Diehl:* It is very interesting to hear the data Mr. Rice has given and also the data from the Mesta Machine Co. We have had experience at Duquesne with reciprocating engines and also with gas engines and I think our gas engines are possibly doing as well as any. And I will say, that since we have gone into the possibility of installing a 15 000 k.w. turbo generator and boilers with 250 lb. pressure and 150° superheat, may be I am possibly associated with a company which is spending some of its money foolishly. We have gone into the subject

*Asst. Gen. Supt., Duquesne Works, Carnegie Steel Co., Duquesne, Pa.

quite thoroughly and had the secret data I might say—which was referred to—and we still think we are right. I should say that the installation we have made has not been an installation of turbo blowers, but has been an installation of a 15 000 k.w. turbine. Against this we had the alternative of putting in five or possibly six gas engines, and some local conditions, possibly, which would be against the installation of gas engines. But from a calculation of the total cost of operation, taking into consideration the first cost of the equipment, I still think we are working in the right direction.

As for the action of the turbo blower, I know that in some of the cases referred to, the excess of the flue dust was due, not so much to the fact that the dust was caused by the air going into the furnace without pulsation, but more from the fact that their regulating device was not working properly and they were obtaining about 10 percent more air than the steam engine was supplying. This has been corrected. Pulsations from steam engines, as previously remarked by Mr. Hoerr, have been pretty well taken care of by the construction of large mains, and I think that we need not consider that a detriment, though there may be more pulsation in reciprocating engines, yet I do not think it will cause very much difference in the operation.

There has been a question in the minds of some of the furnace men, one of whom was quoted in the previous discussion, that pulsation was a good thing for the furnace. I rather question that.

Referring to operation at 30 lb. pressure, I have been in charge of blast furnaces for fifteen years, and I do not think any superintendent would get very much rest by running steadily under these conditions. A blast furnace may run on 30 lb., yet as gas engines are rarely designed to exceed 25 lb. air load, such conditions are very abnormal.

Mr. P. M. Lincoln:* I am not able to add anything to this discussion so far as the application of engines for the purpose of blowing engines or other uses around blast furnaces is

*Commercial Engineer, Westinghouse Electric & Manufacturing Co., East Pittsburgh.

concerned. However, I am interested in the prime mover so far as its application to the production of electricity is concerned, prime movers for the purpose of driving electric generators, and I have given some attention to this particular part of the problem. I realize that this is only a small part of the problem that has been presented to us tonight, and perhaps my discussion is not entirely germane.

In my opinion, so long as the steam turbine was taking 15, 18, 20 lb. of steam per kw. hour, and so long as the sizes of the units required were under 3 000 h.p. or thereabouts, and so long as real estate for putting the plant up could be obtained at a low cost, I really think that the gas engine had some chance; not a great deal, but some. But in this day of units for the production of electricity which run up to 20 000, 30 000, 40 000, 60 000 and even 70 000 kw. in one unit, and in this day of economy down to 10 and 10½ lb. of steam per kw. hour, and in localities where real estate is high, the gas engine has not the ghost of a show. That is the conclusion to which I have come, and I say that in full realization that the gas engine is unquestionably of higher efficiency than the steam turbine can be, although that margin of efficiency, as steam turbine economy has been going up, is considerably reduced. However, there is still a higher economy in favor of the gas engine. That will probably remain, but with the amount of material we have to put in our gas engines and the amount of real estate it occupies for the production of power demanded in modern units where electricity is produced in such large quantities as we have it today, I do not think the gas engine need be seriously considered.

Mr. B. R. Shover:* I have no data at hand which would enable me to comment on comparative costs of the two types of power stations under discussion, but as I have operated the gas engine station referred to by Mr. Rice in his paper and, as General Manager of the Tata Iron & Steel Company at Sakchi, India, had the opportunity of observing at first hand a station using only turbo blowers and turbo generators, may be able to

*Consulting Electrical Engineer, Frick Building Annex, Pittsburgh.

offer some points in regard to the operating conditions of the two types of stations.

The question has been raised as to the unfairness of including a machine shop with the cost of the gas engine station and not including one with the turbo station. Experience would tend to show that a machine shop was a necessary part of the equipment of a large gas engine station, while after five years continuous service at Sakchi the only repair on either blower or generator outfits was the changing of a set of diffusion vanes on one of the blowers.

Only about five-eighths of the pig iron produced at that plant was converted into steel, but there was ample steam raised from surplus gas, with the use of coal only as pilot fires, to operate the entire works. Not a single white man is regularly employed in operating the station and in fact none of the Indians there ever even saw similar apparatus previous to employment at that works.

While thermal efficiency should not be overlooked, the overall efficiency of a steel works in its ability to turn out maximum output is, after all, the main efficiency to be considered, and reliability has at least as much bearing on output as any other one item. The gas engine station with its high-priced expert attendants is today much more reliable than it was a few years ago, but even now cannot compare with the reliable and continuous operation of the Sakchi station where the attendants are all more or less ignorant East Indians. Therefore, even if the total cost of power were not as shown by the paper, but was the same for both types of stations, it would seem that reliability and simplicity would demand the use of the turbo station.

Mr. W. O. Renkin:* I would like to ask Mr. Shover what pressure they were using.

Mr. R. B. Shover: Eight to ten pounds.

Mr W. O. Renkin: I know something of the plant of which Mr. Shover speaks. The turbines were put in after an

*Chief Engineer, A. M. Byers Company, Pittsburgh.

exhaustive investigation of every known method of making blast at that time. The installation cost was something like 40 percent over what it would have cost for reciprocating engines. The question of land did not enter into it at all. There was plenty of land. It was just a question of getting the best and the easiest to put in and operate with native labor. The name of the place of which Mr. Shover speaks means "The Place of God's Delight."

Mr. R. B. Shover: I would like to add another statement in regard to the Sakchi Station, which is that scarcity of water for three months of the hottest part of the year raised the temperature of the condenser feed water to 110 or 112 degrees.

Mr. Sydney Dillon:† There is one point I think of in connection with this matter and that is that there has been a consolidation of these figures. It strikes me that it would be better all around if the figures could be divided to show comparisons between turbo and gas engines on the electric end and also on the blowing end. I am rather inclined to think that in the case of the electric power house the decision will be in favor of the turbogenerator. I am not prepared to say that I think the same in regard to the blowing end. I think it would be well if we could have the figures divided so as to show that separately.

Mr. Bryant Bannister:* My experience with blast furnace operation is practically nil. I have, however, had occasion to make a complete comparison between turbo and gas engine blowers for blast furnace service, this comparison including fixed charges, operating costs, etc. This comparison shows that the only item in favor of gas engine blowers is that of fuel economy which is easily offset by greater fixed charges, leaving the turbo blower considerably ahead in ultimate economy.

I have recently visited several turbo blower installations and in each case found the operating superintendent quite enthusiastically in favor of turbo blower equipment. One operator

†Chief Mechanical Engineer, Carnegie Steel Company, Pittsburgh.

*Engineer with National Tube Company, Chief Engineer's Office, Frick Building, Pittsburgh.

pointed out that his spare machine had not been forced into service on short notice during the past 3-1/2 years. In another instance, a turbo blower had been in operation for six months without a moment's shut-down.

The comparison mentioned above, together with such evidence of reliability as is submitted, leads me to believe that the future for the turbo-blower is extremely bright if we consider the selection of blowing equipment in its broadest aspect.

Prof. Willibald Trinks:† The builders of turbo-blowers talk their own product for the same reason the builders of reciprocating blowers talk their product—both want to sell their product, and no amount of argument will induce them to see the other side. But there is a class of engineers who, while willing to listen to argument, are carried off by the quick progress in rotary or, more strictly speaking, velocity type machinery, in contradistinction to reciprocating, or rather displacement machinery. This class of engineers is afraid to advocate displacement machinery of any type, for fear of being branded as unprogressive, reactionary and as gentlemen of the old school.

The present paper compares an all-gas-engine blast furnace and steel plant with an all-steam turbine plant. Now, engineers who have looked into the subject know that an all-gas-engine plant pays only in localities where coal is very dear. With moderately priced or cheap coal the steam turbine beats the gas engine in the power plant of the steel mill. But it is equally well known that the gas-engine blower beats the turbo-blower for the reasons which are set forth in the discussions of the predecessors of this paper.* Hence the ideal combination consists of steam turbines in the power plant and of gas engines in the blowing room. As before mentioned, reasons for this arrangement can be found a-plenty in the discussions of the two earlier papers by Mr. Rice. Clear recognition of the argumentative process used in this paper of comparing that which we favor with something which is im-

†Professor, Mechanical Engineering, Carnegie Institute of Technology, Pittsburgh.

*"Commercial Applications of the Turbine Turbo-Compressor," Richard H. Rice, Transactions, Am. Soc. M. E., vol. 33, p. 381.

"Turbo-Blowers for Blast Furnace Blowing," Richard H. Rice, Bulletin, Am. Inst. M. E., No. 89, p. 721; and discussions in Bulletin No. 100, p. 794.

practicable, for the purpose of disparaging something that we likewise do not favor, but which is thoroughly practicable, causes absolute failure of Mr. Rice's arguments.

The paper contains a few new features, and these should be discussed in detail. One is the semi-automatic addition to the constant-volume governor to correct for atmospheric temperature, pressure and humidity. If I understand the paper rightly, the correction is not automatic. Some person must first measure the temperature, the pressure and the moisture. The latter is not a very simple process. The question then is, where is the gain compared to the practice now prevailing with reciprocating engines? Is it not just as easy, after making these measurements, to push the slide rule and mark on the blackboard in the blowing-engine house the number of revolutions which the engines are to maintain? And if there is no practical gain, the correction resolves itself simply into a salesman's talking point.

Mr. Rice mentions in his paper that very recent improvements in turbine construction have greatly improved the efficiency of turbine units, but he does not divulge what these improvements are. I am quite sure that engineers would have appreciated information as to what these improvements consist of. Perhaps Mr. Rice will be kind enough to tell us.

Dr. J. S. Unger:† In looking over this representative audience of engineers and blast furnace managers, I am impressed by the interest taken in the turbo blower. This type of blower is not as well known as the steam or gas engine blower, but seems to have several good points which recommend it for consideration.

The size of this audience speaks for itself in showing the interest taken in this very live subject.

As a mark of our appreciation, I move we extend to Messrs. Rice and Moss a vote of thanks for the paper presented to us this evening.*

†Manager, Central Research Bureau, Carnegie Steel Company, Pittsburgh.

*This vote was passed unanimously.

AUTHORS' CLOSURE: In spite of some of the remarks that have been made, no apology is offered for presenting this paper. The figures are based on actual data, but for obvious reasons a more definite statement cannot be made.

The adjustments of the actual data which have been referred to were made very simply. The actual turbine plant considered had less than four furnaces and the actual gas engine plant considered had more than four furnaces. The figures for the typical four-furnace plant were, therefore, obtained by multiplying by the ratio of number of furnaces. This does no injustice to the gas engine plant. It avoids giving the turbine plant benefit from increased size and does not penalize the gas engine plant due to decreased size. All the original figures were based on 1915 prices, and these have been increased in all cases by 25% to make allowance for present prices.

The cost of coal is taken at $2 per long ton, and the paper applies directly to a locality where the coal cost is $2. All of the figures are clearly given in table of comparative costs and recomputation can be made from any locality. Even for $7 a ton there will still be a considerable margin in favor of the turbine plant.

Reference has been made to change of efficiency of the turbo-compressor as pressure varies. As an actual fact this is comparatively small in the region of operation of a blast furnace. This is shown in a paper before the A. S. M. E., "Commercial application of turbo and turbine compressor," R. H. Rice, volume 33, page 383.

THE POSSIBILITIES OF SMOKELESS OPERATION OF HEATING FURNACES AND SOAKING PITS

A Topical Discussion

CHAIRMAN A. N. DIEHL:* This being the annual meeting, terminating the fiscal year of the Mining and Metallurgical Section of the Engineers' Society of Western Pennsylvania, it was thought by some that a topical discussion on some subject of interest to the metallurgists in the Pittsburgh district would be very acceptable. We have had during the past year very excellent papers, discussions and attendance. The attendance at the meetings indicates in itself the interest shown in the subjects presented, and it is in consequence a great satisfaction to the entire Society to know this. In the attempt to find a subject of general interest and information which has not been very thoroughly covered, a suggestion was made, as to the operation of steel heating furnaces of all types, whether for "ingots, bars, sheets, wire or similar allied purposes," as being one of interest and value. For this reason a number of members have been requested, and kindly consented, to present expressions of their experiences and deductions on this important subject.

The principal object of this type of meeting, however, was to draw together, not only the ideas of those who have possibly prepared discussions, but also to stimulate a further extensive discussion, participated in by all members and guests present. It may be that many of your questions may remain unanswered, and I am sure that it will be so if they are not asked, but in addition the Section desires the information which you may give. I hope there will be no hesitancy in advancing your individual ideas and that the discussions will be carried on promptly.

*Assistant General Superintendent, Duquesne Works, Carnegie Steel Company, Duquesne, Pa.

The members of the entertainment committee have very thoughtfully provided sandwiches and cigars, which I am quite sure is very apropos at this meeting. After the intermission the discussion may be continued with greater zeal.

There is no location in which a discussion of the possibility of the smokeless operation of heating furnaces and soaking pits should be of more interest than in this Pittsburgh district. Coal, oil, gas, limestone, iron and steel are its fundamentals. On these foundations our present Pittsburgh is a commercial possibility. Each community, as a rule, develops one special industry, induced and regulated generally by nature. The abundant endowments of Pittsburgh should be utilized with the primary object of preserving them as far as possible. It is therefore proper that our fuel should be used with the greatest efficiency, and in only sufficient quantities to produce the desired results.

The principles of oxidization and reduction are required in most of our metallurgical operations. Iron ore is principally a mixture of the oxidized base elements of its composition. These oxides are brought in contact with carbon at a temperature sufficient to reduce the most important elements, partially or completely, and gives us a product which we know as pig iron. This crude alloy is refined by taking advantage of the lower affinity of oxygen for iron than for the other constituents as carbon, silicon, manganese and phosphorus. In consequence, these elements are removed first, the iron remaining in a higher state of purity, except partly oxidized. After sufficient deoxidization by proper recarburizers, the resultant iron alloy is made ductile enough to be known as commercial steel.

These steps constitute our present open-hearth and Bessemer practice. The ingots are placed hot in the heating furnaces, or soaking pits, for further treatment. The steel in the center of the hot stripped ingot very often remains molten when charged, and the purpose of the heating is to equalize the internal and external temperature, so that they are approximately the same, and also to heat sufficiently to roll into smaller sections. It was formerly the practice to provide a pit of refractory material to retain this sensible heat and to give the ingot a uniform soaking temperature by radiation throughout the ingot. Present practice generally re-

quires the introduction of outside fuel used in connection with regenerated air. Average practice will require for large ingots about 700 cubic feet of natural gas per ton to maintain a temperature of 2400 degrees in the pits. This is equivalent to about 715 000 B.t.u. per ton.

Artificial gas from coke ovens, blast furnaces or producers, as well as oil, tar and powdered coal, have been proposed and are also being used for the purposes of reheating steel. Some of these, however, are proposed or are in an experimental stage. For secondary reheating, such as demanded in heating furnaces, for slabs, blooms and billets, there is required larger quantities of gas, as these products are generally cooled after the first rolling. Approximately four or five times as much fuel is required to reheat this cold material as is required for the preparation of the ingot from the hot open-hearth steel. With ordinary product, surface oxidization or scaling is not an essential detriment. Different plants show analyses from pits or heating furnaces, indicating a complete combustion of carbon without experiencing any excessive amount of scale. In some grades of steel, where the ingot surface is pitted, a long heating with a heavy slag has been found beneficial, as is the case in a number of nickel alloy steels. In others, notably high carbon, heating must be carried on with the greatest care. This is also true of bars and blooms. A great amount of work has been done by engineers on the heating of steel of such form where there is very much surface exposed, as scale or pitting may ruin the surface or otherwise deteriorate the final product. It is hopd that we can get some information from some of the members who have experimented on these subjects. The presence of carbon is generally advocated for this purpose, and in consequence we have incomplete combustion.

Some information relative to the extent of the reducing atmosphere required or the quantity of carbon necessary may be fortcoming. It is hoped that many topics similar to the above instance will be given. Smoke as a nuisance is not related to the subject in question and, as this is a large subject in itself, is not primarily relative to our topic this evening, so we can take up that phase at some future time. It is the metallurgical smoke which we consider of primary importance for this evening's dis-

cussion. I sincerely repeat and hope that all will join in and make the meeting one of mutual benefit.

Mr. Julian Kennedy:* I do not know that I have a great deal to say on this subject. You all know that in heating steel there is apt to be more or less smoke. In many cases a reducing flame is desirable, which is apt to be smoky, especially if cold steel is charged into the furnace or if the regular operation of the mill is interrupted. It has occurred to me that while much can be done to diminish smoke in the heating furnaces, it might be a good plan, in order to do away entirely with the emission of smoke into the atmosphere, to connect heating furnaces to a common draft flue and conduct the spent gases either through waste heat boilers or direct to a scrubbing chamber and wash them in the same way that Mr. Diehl has so successfully cleaned his blast furnace gases. This would be a very simple process and would require much less water than is necessary where gases have to be brought to a low temperature to eliminate moisture so as to fit them for fuel. This treatment would do away with all pollution of the atmosphere, not only by black smoke, but also by the light-colored dust which is very damaging to curtains, furniture, dry goods, etc., though, of course, not quite so bad as the fine carbon in black smoke.

Dr. J. S. Unger:† When one stops to consider the number of papers presented before this Society, the number of Bulletins issued by the Bureau of Mines and the many magazine articles appearing from time to time on the subject of smoke abatement, it impresses one with the interest displayed in the subject.

The question of smoke prevention is not new. As early as 1306 a royal edict published in London punished any one allowing smoke to escape from a chimney with death by hanging.

It is very easy in a smoke discussion to talk about the effect of smoke on health, or the injury or destruction of property. Such discussion invariably leads to smoke from boilers, locomotives or other power-producing plants, usually ending in a recom-

*Engineer, Bessemer Building, Pittsburgh.

†Manager, Central Research Bureau, Carnegie Steel Company, Pittsburgh.

mendation of some particular type of furnace, boiler, stoker or burner. It is true that power-producing plants have been the worst offenders in the smoke nuisance, but such a condition is rapidly disappearing.

The subject for this evening, "The Smokeless Operation of Heating Furnaces and Soaking Pits," is one on which very little has been written. Such furnaces are rarely operated with solid fuel, but almost always with a gaseous fuel, an atomized liquid fuel as oil or tar, or a powdered solid fuel.

The necessity of using such fuels is due to the fact that in heating steel the chamber of the furnace must be filled with a heated, gaseous atmosphere which surrounds the steel on all sides, permitting instant adjustment to meet the condition of heating required, easy observation, and not contaminated by ashes, cinder or clinker from a solid fuel, nor should the view be obstructed by smoke, or by a bed of solid fuel, or the capacity of the chamber be reduced by such bed.

To meet such conditions, a gaseous fuel, or such fuels which would act in the same way as a gaseous fuel, are used in open-hearth steel furnaces, in heating furnaces and soaking pits.

There does not appear to be any necessity of explaining what causes smoke, as this has been fully covered by many writers, nor do I believe it necessary to say anything about perfect combustion for the same reason.

When the soaking pit was first brought out it was simply a box of refractory material a few inches larger than the ingot with which it was charged. The ingot was stripped as soon as the outside had solidified sufficiently to preserve its shape. The interior of this ingot was liquid or pasty. By placing it in the soaking pit, the excess heat of the interior was taken up by the outside and the entire ingot came to a uniform temperature. No fuel was used or provided, except that required to initially heat the box, the heat required to keep the box or pit to a working temperature being obtained from the hot ingots subsequently charged.

The modern soaking pit combines the function of the original soaking pit with the ability to heat cold or partly heated ingots. It is equipped to burn gaseous fuel, has regenerators, is usually operated at temperatures between 950 and 1250 degrees Cent.,

and holds four ingots of about three tons each. Some late installations hold as many as 24 ingots and, although called soaking pits, they are really ingot-heating furnaces.

It is the intention in the average four-ingot soaking pit to always charge hot steel. Such steel requires very little heat to bring to a working temperature, as advantage is taken of the soaking effect of the pit. For this reason the heating chamber is small and the combustion space is limited. When operating normally this space is sufficient to operate smokelessly, but if the pit is pushed for capacity, or the ingots are partly or entirely cold, requiring considerable heat to bring up to a working temperature, the pit rarely operates without some smoke.

We know if a shovel-full of high volatile coal is thrown on a thick fuel bed of a hand-fired boiler, smoke results, unless a long combustion space, sufficient to burn the volatile products before being cooled, is provided. This same principle applies in the soaking pit when rapidly heating cold steel. The combustion space is short and, although a gaseous fuel is used, it will smoke on account of too short a time to burn and the chilling effect of the cold steel. A smoking pit may also develop when the ingots are hot and a delay occurs in the mill, preventing drawing the steel when it is ready. The heater then cuts down the air supply, compelling the gas to burn without sufficient air. This fills the pits with a smoky flame, prevents scaling or burning of the steel, and enables him to hold the steel for some time without a serious reduction in temperature or danger of injury to the steel. This may not be considered economical or good practice by some, but is the only thing to be done with a minute's warning.

Natural gas, our best gaseous fuel, is well adapted for such working conditions, and smoke coming from furnaces using such fuel is not serious. When producer gas, by-product coke-oven gas, oil, tar or powdered coal are used, as they must be owing to the rapidly decreasing supply of natural gas, more smoke will result, as they are not so easily controlled. Such a condition will result in a change of the future design of both pits and furnaces, having a longer combustion chamber, and increased heating space for the slower firing of steel, which is not charged promptly after stripping.

The objection in my mind to a mechanically-stoked, coal-fired pit or furnace is that a situation may suddenly arise in mill operations where it is necessary to shut off all the gas and rapidly reduce the temperature. A stoker, or possibly several, attached to such furnace is full of burning fuel, which continues to give off heat for some time, even after the operation of the stoker is stopped. For ordinary mill temperatures for forging and rolling this is not so serious an objection as where stoker-fired furnaces are used for low temperatures between 400 and 850 degrees Cent., as in the heat treatment of steel.

When a furnace must be kept at the lower temperatures it is very important that a certain temperature is not exceeded for fear of spoiling the effect desired by the treatment, besides rendering it extremely difficult to operate without smoke. Under such conditions a gaseous fuel will give less smoke than a solid fuel and is to be preferred.

Considerable experimental work is being done with heating furnaces fired by mechanical stokers. The newer types of such furnaces operate with very little smoke, as the knowledge gained in the study of highly efficient boiler firing without smoke has been applied in the construction of such furnaces. The requisites are:

1. A regular supply of fuel, whether gaseous or solid.
2. Sufficient combustion space to properly burn the fuel.
3. Sufficient air supply to permit the fuel being burned.
4. Adequate stack draft.

In designing heating furnaces, these requisites must be borne in mind to obtain smokeless combustion and to operate economically. Underfeed stoker, forced draft, coal-fired billet heating furnaces and stoker-fired continuous furnaces 70 feet long and 20 feet wide are being operated without smoke.

It might be possible to use pure hydrogen gas or pure coke in an improperly designed and uneconomical furnace without producing smoke, as imperfect burning of such fuel does not produce smoke.

On account of the absence of smoke, it might be claimed a furnace was operating economically, but this is not necessarily true. Too much air might prevent smoke, but if the amount is excessive a waste of fuel results.

It is impossible to secure an adequate supply of natural gas in Pittsburgh for manufacturing purposes. The oil and tar supply is limited. By-product coke oven gas is an excellent fuel, but is not produced in sufficient quantity to cover our requirements. The promising fuel at this time appeares to be powdered coal, the use of which has grown enormously within three or four years. This fuel can be burned without smoke as oil or tar are burned. The reason for this is that air is employed to carry the coal into the furnace, which permits of quick and complete burning without smoke.

To my mind the subject, "The Possibility of Smokeless Operation of Heating Furnaces and Soaking Pits," might well be changed to read "The Probabilities of Smokeless Operation of Heating Furnaces and Soaking Pits."

Just as soon as the manufacturer accustoms himself to the new fuel conditions made necessary by the exhaustion of the natural gas supply, we can look for less smoke than ever from our furnaces.

Mr. M. F. McConnell:* It was with some hesitation that I promised Mr. Hiles to participate in the discussion of this evening. Realizing that practically all work of serious value in smoke prevention has been done under the spur of necessity, I feel that we, outside of Pittsburgh, are mere spectators in this city's fight and as such should not throw our shadows too strongly on the screen less we very properly be told to sit down. However, being spectators we might find a new point of view, or possibly emphasize something that has been better developed by another, and thereby contribute something of value to the evening's discussion.

Before a discussion of the possibilities of smokeless combustion in heating furnaces and soaking pits, it may be well for us to fix clearly in our minds the function of a heating furnace and the limitations to the application of ordinary methods of smoke prevention.

In general, a heating furnace is installed for the purpose of heating steel to a temperature suitable for rolling or forging. The size of the material may vary from that of an ingot for a large

*Superintendent, Mingo Works, Carnegie Steel Company, Mingo Junction, Ohio.

forging down to a short section of sheet bar weighing but a few pounds. The piece introduced for heating is usually cold, although any process that brings the steel to the heating furnace hot by just so much decreases the work to be done and reduces the difficulties in the way of smoke prevention. The temperature to which the steel is heated varies, according to the process, from the dull red of the sheet mill furnaces to the welding temperatures of the tube mills.

But with all the variations in process detail, the one measure of success, is the ability to consistently attain the desired temperature without chemical or physical injury to the material being heated. For the purpose of this discussion, the danger of chemical injury to the steel lies entirely in the tendency toward oxidation of the iron by any excess of air in the gases as they come in contact with the material being heated, this tendency toward oxidation, which is serious only after the steel has been brought to a red heat, is the greatest stumbling block in the way of smokeless operation of heating furnaces.

Taking up the consideration of smoke and its prevention, it is well recognized that the visible part of smoke consists of minute particles of carbon or condensed tarry vapors. It is also recognized that the presence of these particles is in itself evidence of partial or incomplete combustion, for, if combustion had been complete, all the smoky material would have been combined with oxygen to form a colorless and invisible gas. It is further recognized that incomplete combustion is the result of one of two conditions,—first, the failure to supply or properly distribute sufficient oxygen for the complete burning of all the combustible matter in the fuel; or, second, that combustion has been arrested due to the chilling of the flame to a temperature below that necessary for flame propagation. The smoke problem of the steam boiler is an illustration of how the second condition may exist even in the presence of great excess of oxygen.

Having now in mind the causes of smoke production and remembering the danger of oxidizing hot steel if it comes in contact with free oxygen, it is easy to see why the operator, not willing to risk his steel, cuts down his air supply or introduces an excess of fuel, either action resulting in a smoky stack. The prob-

lems of the engineer are to give the operator such a control over his fuel and air supply that he may safely run his furnace with just the right amount of each, and that the combustion chamber shall be so designed that the flame propagation shall be complete before the flame comes in contact with any cold surface.

It is fortunate that the control of the fuel and air supply is just as vital a condition for fuel economy as it is for smoke prevention, for the financial advantage to be gained has in the last few years encouraged great improvements in the design of fuel-handling equipment of every character.

The modern mechanical gas producer has furnished a supply of producer gas so uniform in quality and quantity that it allows almost perfect regulation of the furnace mixture. The stoker has accomplished almost the same results for the coal-fired heating furnaces, while powdered coal promises revolutionary results.

It is a safe statement that a reducing or neutral flame cannot be maintained in a heating furnace without the production of smoke unless some form of automatic fuel feeding is resorted to; while it is just as important that the air supply be under perfect control, this control being readily accomplished by means of dampers.

In order that the good work of fuel and air control be not undone it is necessary that the combustion chambers be of sufficient size and so arranged that the gas and air, if it is a gas-fired furnace, shall be quickly and thoroughly mixed and that the temperature shall be as high as possible consistent with the process. The temperature of the combustion has an important bearing on the speed of flame propagation, and this temperature can be greatly increased by preheating of the air supply to as great an extent as possible. This has been accomplished usually by regenerative chambers in reversing furnaces or by what is known as recuperative passages heated by means of the waste gases and through which the air is forced on its way to the furnace.

With a perfect control of the mixture and a good and high temperature combustion having been accomplished, the only serious danger of forming smoke is encountered in the flame coming too quickly in contact with cold surfaces, such as recently charged

cold material, or a part of the furnace in which artificial cooling has been carried too far.

In the writer's own experience a great improvement was made by substituting air for water as the cooling medium for the cooling pipes of a flat-roofed continuous furnace. This air, having gained considerable temperature, was carried to the combustion chamber, and the improvement, both in economy and combustion, was beyond our expectations. In this case the cooling of the roof was greatly reduced, though still sufficient, while the preheated air for combustion was a great advantage.

If the flame has been carried to completion before being chilled, the products of combustion can be brought in contact with the colder material to be heated, and thus the temperature of the waste gases be reduced to as low a temperature as practicable.

It is here that the continuous heating furnace has had its great advantage. The discharge end is a part of the combustion chamber and burning gas does not come in contact with the colder steel until the danger of arrested combustion is passed; then the extent to which the waste gases can be cooled is limited only by the practical considerations of construction.

Up to this point this discussion has been general in its application, and all suggestions have been dictated as much by economy as by smoke prevention, for it is almost an axiom that with the highest economy smoke cannot exist.

Unfortunately there are some processes where fuel economy must give way before the metallurgical requirements. This is especially true in sheet and tin plate mill furnaces, where the temperatures must be maintained so low as to preclude the welding of the sheet packs under the great pressure of the rolls, and the flame must always carry sufficient unsatisfied fuel to make formation of scale in the furnace an impossibility. Here we have the ideal conditions for smoke formation. The only solution for this seems to be what we might call recombustion. This can be accomplished by introducing sufficient additional air to complete the burning of the gas. As this air addition should not be made at a point where the steel is subject to oxidation, it is apparent that, with the possible exception of the continuous furnace, this addition must be made at a point where the heat generated is no

longer available for the steel, and is therefore wasted up the stack unless the furnace is equipped with some auxiliary device for conserving the waste heat.

While this idea of recombustion is not attractive to the engineer, because it offers little of economical advantage, it does offer the solution of many smoke problems.

All that has been said heretofore applies just as well to the consideration of the soaking pit, for the soaking pit is only one of the many types of heating furnaces and lends itself to the same treatment. We find here our tendencies to smoke greatest when a cold charge is introduced or when carrying an excess of gas, just as in the ordinary furnace.

In closing, I might state my own belief that, while an understanding of the causes of smoke and the methods of overcoming them are assuredly necessary, the greatest difficulty will always be found in sustaining the interest of the operators or heaters to the point where they will follow up even a proved system of operation. Therefore, the greatest chance for success in "The Smokeless Operation of Heating Furnaces and Soaking Pits" lies in the development of equipment where adjustments once made will, as far as possible, be automatically maintained.

Mr. W. E. Snyder:* The discussion herewith presented may not wholly conform to the title of the main paper. I will, however, discuss the matter from the broad standpoint of smokeless operation of heating furnaces, as this appears to one who has to do with the operation of various kinds of furnaces in cities having smoke ordinances. Under such conditions, not alone the possibilities of smokeless operation of heating furnaces have to be considered, but also the possibilities in case the furnaces are kept in operation while making smoke. In short, I cannot discuss this question very well without considering what the possibilities may have in store for the fellow who has to operate the plant as it is, and not as he would like to have it.

Before discussing the technical phases of this subject, I believe it would be well to state my position in general. In discussing the abatement of smoke in the operation of boilers, my

*Mechanical Engineer, American Steel and Wire Company, Frick Building, Pittsburgh.

position has been criticised; I have been called a "conservative," a "standpatter" and a "retarder of progress," etc., mainly for the reason that I try to consider the practical conditions which exist, and which have to be faced by the man in charge of a plant. With reference to boiler plants, I have maintained that in many instances smoke is produced because the installation was old and inherently defective from an engineering standpoint, and it would not be possible to abate smoke completely without replacing the installation with a new one. In some cases, however, it is possible to abate a large proportion of the smoke by continual and close supervision, with the one object in mind of preventing smoke. Both of these methods of smoke abatement have features which are impractical; it is not possible on short notice to tear out an entire boiler plant and replace it with new and modern equipment, nor is it a practical proposition to exercise such close supervision over the ordinary class of labor that is obtainable for boiler house or gas producer operation, that will obtain continuously the conditions that are essential to smokeless operation. In other words, there are in this city and district a large number of installations using fuel which were made with never a thought of preventing smoke, and without much thought of fuel economy. It is foolish and useless to start on a campaign of knocking at the smoke nuisance in general, and nagging at men or firms in particular which operate such plants. This has been the character of the agitation to abate smoke up to a few years ago, and it was absolutely without permanent result.

The present methods followed in this city are, I believe, essentially right. The main features of the present ordinance and its enforcement by the smoke inspector are: The requirement of a permit for either a new installation or the remodeling of an old one, which insures an installation favorable to the prevention of smoke; the requested co-operation of all violators of the smoke ordinance to co-operate with the Public Health Department in abating smoke and making such changes as engineering study shows are necessary to do this. In other words, the big difference in general between the past and present methods of dealing with the smoke nuisance is that in the former it was made the subject of harangues and small-sized orations by those politically and estheti-

cally inclined. In the latter or present method the subject is treated as one of engineering, which it is; consideration is given to the engineering features of all new installations, and there is available a reference board of engineers, whose advice can be obtained by manufacturers in dealing with troublesome operating problems, when it is attempted to keep the machinery in full operation and at the same time prevent smoke in the older plants.

The principles in mind in the above discussion, which applies more particularly to boilers apply also in the smokeless operation of furnaces. One of these principles is, that the abatement of smoke from heating furnaces is essentially an engineering matter, and must be handled by engineers in an engineering way, and in a way that is consistent with the continuous operation of the plant. It is simply useless to imagine that a czar can be created who will issue a ukase that after a certain date smoke from stacks connected to heating furnaces will be absolutely abolished. Such a situation would be a foolish one, and would do more harm than good, because it would make a ruling or pass an ordinance, the enforcement of which would be impractical. Any ruling relating to the prevention of smoke from heating furnaces must be practical, or its enforcement will shut down the plant. What is practical and possible to carry out has to be determined by a study of heating furnace conditions as they are, and also as they ought to be.

Another principle referred to in the above discussion of boiler smoke abatement is the one of making sure that every new installation will be of a design favorable to the prevention of smoke. This is by far the more sensible way, rather than waiting until the installation is completed, and then find that it embodies some features which make it practically impossible to operate without making smoke.

The above can all be summarized briefly in this way: The time to do the most efficient work in the abatement of smoke is while the plans of new installations are being put on paper; existing installations should be dealt with by methods suggested after careful engineering investigation, which also gives full consideration to the operating problems which must be faced by the man or company that operates the plant.

So much for general conditions having to do with the abatement of smoke. Now in reference to the abatement of smoke in various kinds of heating furnaces, considering first the continuous or similar type of furnace heating billets or small slabs.

In any installation there are at least two essential features that have to be observed. The gas has to be supplied regularly to the furnace, and the air supplied at high temperature. The first condition is fairly well secured by modern-type, mechanically-poked, gas producers. If hand-fired, hand-poked producers are used, the gas goes to the furnace irregularly. At times there will be a large surplus of gas, which simply chokes the furnace and makes excessive smoke. The heating of the secondary air, or the air used to burn the producer gas in the furnace, is necessary, not particularly because of the heat returned to the furnace by the air, but to secure quick and complete combustion. I have seen modern types of German continuous-heating furnaces operating with an air temperature of from 1000 to 1200 degrees. All combustion takes place in the first third of the furnace; the remaining two-thirds of the furnace was almost as clear as the air outside, and of course there was no smoke. This high temperature of air was obtained by the use of regenerators, and diverting part of the hot gas from the furnace into the regenerator. I have never seen regenerative furnaces of this type in this country, but recuperator furnaces are common, and it is becoming customary to pay more attention to the design of the ducts or stoves used to heat the air for the purpose of getting the temperature as high as possible. This reduces the waste of the heat to the stack, returning it to the furnace, and also improves the combustion and heating, and prevents smoke.

We have made a great many observations on various furnaces of the continuous type, that have not been built with either of the above conditions in mind. Notwithstanding this, the conditions are fairly good, the smoke rarely running over No. 2 on the Ringlemann chart.

With reference to large soaking pits and slab heating furnaces, the requirements are very similar to the others—that is, regular gas supply and high air temperature. There are, however, more interruptions to regular operating conditions than occur

with continous furnaces. These are due to reversing gas and air; to making bottom; to charging cold ingots; to having doors open various lengths of time, and to the necessity of holding the charge on account of irregular rolling, etc. The effect of these "accidents" of operation is, that uniform conditions cannot be maintained, and at times smoke results. We have made a number of continuous observations of stacks to which soaking pits are connected, which indicate what the conditions are. One of these covered a period of 54 minutes; during half of this time the stack was clear; for 23 minutes made No. 1 smoke and for three minutes No. 2. Another series of observations covered 105 minutes; during 83 minutes the stack was clear; for ten minutes made No. 1 smoke and for twelve minutes made No. 2 smoke. There were five pits connected to the stack.

Observation at another furnace heating cold slabs and using natural gas showed: When the furnace was charged with cold steel, and gas and air turned on, the stack showed No. 3 smoke for sixteen minutes and then No. 2 for eight minutes. The furnace was then reversed without changing either gas or air, and the stack cleared completely. When it was next reversed, the stack again showed No. 1 and No. 2 smoke. Observations were repeated long enough to show that more smoke was produced when operating one way than when operating the other. A number of other observations of soaking pit and slab furnace stacks have shown results similar to the above; that is, a large proportion of the time the stacks are clear, or have only very light No. 1 smoke. There are other times, however, when there are short spells of smoke, which sometimes gets as bad as No. 3 and No. 4. The causes of these occasional short spells of smoke have not been fully determined, but they are apparently due to the exigencies of operating conditions.

We do not know whether or not it would be possible to operate such furnaces as these with a complete absence of smoke at all times, as the character of the furnace and fuel, the operating conditions and the heater all enter into the problem. The heater can undoubtedly do a great deal toward the prevention of smoke, provided he is "built that way." However, there are difficulties, even in the way of a conscientious heater preventing smoke. In

many installations he cannot see the top of the stack from where he has to stay, and he does not know when smoke is being produced. It is necessary for an independent observer to establish a relation between the top of the stack and the work of the heater. It is not very easy to establish this relation, because smoke sometimes issues from the stacks for short periods when the heater has made no change whatever. A smoke indicator that can be used on the stack inside the building, such as is now being put on the market in a tentative way, will be a help in the smokeless operation of furnaces. Even, however, with a smoke recorder in use, the prevention of smoke puts an added care on the shoulders of the heater, which he is generally not very ready or willing to assume, being only human. This makes necessary the use of tact and common sense on the part of the superintendent, as it will not do, even if the superintendent is convinced that some of these "high spots" of smoke are due to carelessness on the part of the heater, for him to rush out in the mill with an axe and drive a good heater off the premises. He must, if possible, create within the heater a clean heart, so that he will want to prevent smoke himself, and it sometimes requires time to effect such a transformation.

The substance of all of this is, that where the installation has no serious engineering defects and can be operated properly, very little smoke should be produced; if, however, some smoke at times is produced, it is necessary to study the conditions carefully to determine the cause, and if the cause should be something in the equipment that can be changed, so much the better. If, however, it should prove to be due to some wrong practice on the part of the heater, it may take time and considerable finesse to get any results, as heaters do not grow on bushes, from which they can be picked when wanted.

This latter point brings me exactly to where I stand on this whole smokelessness proposition. I do not oppose this in any way, but favor it. In adopting means for its accomplishment, however, I would use common sense. If the plant operator shows reasonable activity and willingness to co-operate in improving his conditions and adopting modern methods of using fuel, he should be commended and encouraged to continue the work until it results

in the practically complete abatement of smoke at his plant. If, however, there are occasional lapses, such, for instance, as those explained above in reference to heating furnaces, it is nothing but persecution to prosecute the plant owner because one or two of his employees are not skliful enough and watchful enough to prevent smoke all the time, when that plant owner knows that if he were to discharge the man responsible for part or all of the smoke he would, in all probability, have to replace him with one less reliable and less skilful. I believe it is a false statement to say that the majority of manufacturers do not care whether they produce smoke or not. I believe the majority, at least of the large companies, are earnestly desirous of completely abating smoke. However, their zeal does not rise to such a degree that they are willing to abate almost everything else, including part of the operating force, in their efforts to abate smoke. The primary purpose of the abatement of smoke is to benefit the surrounding community, and the means employed should not be such as will, in the long run, do more harm than good to the community affected.

In all of the above discussion it is assumed that the purpose of operating the heating furnaces without smoke is to conform with regulations that are becoming every year more necessary in cities using soft coal. It may be argued that there is the additional reason of greater economy to the manufacturer in operating without smoke. This matter of improved economy, however, is not a certainty. The process of reasoning followed by those who discover great economies due to prevention of smoke seems to be that smoke is an evidence of incomplete combustion, and incomplete combustion means waste. This is all true, but the facts are, that black smoke of itself is not a serious waste, and many times in eliminating it, particularly in old installations, the expense is greater than the saving. This is another point where a compound of engineering and common sense is required if the matter of actual waste of heat is to be considered intelligently. A stack with black smoke and a gas temperature of 1000 may represent waste, but another stack without any smoke, but a temperature of 1300, may represent a greater actual waste of heat. In the first case the "investigator" of such matters is seized with a spasm as he contemplates the wastefulness of the American manu-

facturer; with the smokeless stack, he is entirely satisfied. Therefore, because of all of these conditions, we believe that the feature of economy cannot be urged very strongly as a reason for smokeless operation of furnaces. The usual heating furnace is a wasteful user of fuel at best, and means other than smokeless operation have to be adopted in order to increase the heat efficiency of the equipment.

It is sometimes argued that smoke is a necessary accompaniment to the operation of heating furnaces, because it is necessary to avoid an excess of air in order to keep down oxidation of the metal, and this results in smoke. I have never had opportunity to make tests to determine how much truth there is in such a statement, but I doubt it very much. A minimum of air may be necessary to prevent oxidation, but if this air be supplied at high temperature and the gas flow to the furnace in an even stream, both air and gas regulated properly, it ought to be still possible to get good combustion.

Mr. H. C. Siebert:* My discussion is only indirectly connected with smokeless operation of heating furnaces and soaking pits. Previous speakers have pretty well covered the principles of economic operation of furnaces, and it may be of interest to give you an idea of the efficiency of various billet-heating furnaces such as are applied in our steel mills.

During the past five years we have made tests on different heating furnaces in the various plants of our company. The results of some of these tests are given herewith in the form of heat balances:

*Experimental Engineer, Duquesne Works, Carnegie Steel Company, Duquesne, Pa.

HEAT BALANCES FOR VARIOUS FURNACES

Type of Furnace—Continuous.

Kind of Fuel.	Width of Furnace	Length of Hearth	Sect. and Length of Billet	Weight of Billet Lbs.	Weight Heated per Hour Lbs.	% of Heat Absorbed by Steel	% Lost in Stack	CO Loss %	Radiation Loss %	Soot Loss %	Carbon Lost in Ash %	Total Heat in Fuel per Ton of Steel
Natural Gas...	7′	21.5′	1½″×1½″×5′	38.25	11402	41.8	46.6	2.8	8.8	....	...	1,824,256
Natural Gas...	8′ 9″	34.0′	4″ ×4″ ×3′6″	190.4	13634	35.0	49.4	1.2	14.4	....	...	2,036,000
Natural Gas...	8′	32.0′	4″ ×4″ ×33″	148.6	9340	20.3	45.9	3.2	30.6	....	...	4,072,000
Coal.....	8′ 9″	37.5′	3″ ×6½″×4′	265.0	20564	14.9	42.9	21.4	6.8	10.0	4.0	5,593,000
Coal.....	9′	28.5	1½″×1½″×6′	45.9	3920	13.4	44.4	5.3	17.3	15.6	4.0	6,227,000
Natural Gas...	9′	26.5	4″ ×4″ ×45″	204.0	16503	27.2	39.1	10.7	12.5	10.5	...	2,542,964
Natural Gas...	9′	26.5	4″ ×4″ ×45″	204.0	16891	40.0	47.3	....	12.7	....	...	2,009,532

Forty percent is by no means the best efficiency on which furnaces are being operated today. We have furnaces in our plant that average month in and month out between 60 and 70 percent, and are smokeless.

Dr. Horace C. Porter:* I appreciate being called on to discuss this subject, but am not able to say much about industrial heating furnaces. I am, however, greately interested in fuels and their use. In Chicago, recently, I was told by an expert on heating furnaces—a man who had invented a new type of furnace with a special overhead regenerator—that he could obtain over 40% efficiency with his furnace on producer gas and that the old type of small heating furnace, such as nut and bolt furnaces, rarely got over 5% efficiency. I am glad to learn here tonight that the larger furnaces often give higher than 40% efficiency.

I was interested to hear Dr. Unger speak of coke oven gas as being an excellent fuel for steel plant heating furnaces. He said, I think, that the greatest disadvantage it had was our inability to get enough of it. As to that, I might state, not for advertising purposes, but merely as a common sense argument, that the steel plants can easily overcome that disadvantage by putting in more by-product coke ovens in place of the bee-hives. If all the coke were made with by-product recovery there would

*Chemical Engineer, H. Koppers Company, Pittsburgh.

be 9000 cu. ft. of surplus coke oven gas amounting to over 5 000 000 B.t.u. for every ton of iron produced.

In that connection, it might be of interest to note that the Carnegie Steel Company is building at Clairton, near Pittsburgh, the largest plant of by-product coke ovens in the world. It will have a capacity to make surplus gas amounting to about 65 000 000 cu. ft. per day. This gas can heat a good many furnaces, and in fact, I understand it is to be used for that purpose by the steel company not only at the Clairton works, but at Homestead, Duquesne and other plants. It will be equivalent, on the heat unit basis, to about 1600 tons of coal per day, or, with allowance for increased efficiency, to more than that amount. The Glassport plant of by-product coke ovens, near McKeesport, furnishes now a certain amount of surplus gas suitable for this use in heating furnaces.

Coke oven gas debenzolized has the advantage of being a clean fuel. It is scrubbed and freed of its tar and light oil vapors and can therefore be burned more easily without smoke than other gases or raw coal which project those smoky constituents into the furnace. Soft coal gas producers for example make a gas carrying considerable tar.

Coke oven gas can also, under equal conditions, produce a higher temperature in the furnace than producer gas. It carries generally not over 6% of incombustible gases, while producer gas has nearly 60%. Its heating value per cubic foot is four times as great. Four volumes of producer gas are equal to one of coke oven gas in heat units, and require about the same amount of air for cumbustion; the waste gases from the producer gas fire are much greater owing to the high nitrogen content. For this reason the flame temperature is lower with producer gas—theoretically, under equal conditions, by 600 to 700 degrees Fahrenheit—and a larger amount of sensible heat is carried up the stack.

Mr. J. W. Henderson:* It is very interesting to me to hear about the economies in heating furnaces, and especially that sometimes when they make smoke there may be such a loss as to amount to 24% of the carbon in the fuel. We have had people

*Chief, Bureau of Smoke Regulation, City of Pittsburgh.

tell us, who have boilers and furnaces using natural gas, that natural gas does not make smoke. We have photographs and lantern slides of the stacks of some of our prominent concerns in Pittsburgh connected with heating furnaces using natural gas for fuel that make more smoke than some of the stacks using coal for fuel.

When we were first appointed to office in the Bureau of Smoke Regulation the general superintendent of one of the largest mills in the district came in and said: "You know we can't do anything with heating furnaces." Having been brought up with the idea that "can't" is a word that should be discarded, he was told that we did not exactly agree with him. Incidentally by sending him complaints about the amount of smoke they were making from some of their stacks and photographs which the complainants sent us, and although this matter had been talked about and written about in the papers for a good many years, he came back with a long tale as to what he had tried to do and what he had done and practically stating that they had now accomplished a smokeless heating furnace, and this was done merely by the admission of more air than the amount that had been used formerly, which was originally attached to the furnace to save the length of life of the roof, and he asked us to come up and inspect what he had done. This we did. He closed the air supply pipe and threw in a shovel of coal and the smoke coming from the heating furnace was what the old heater thought a proper indication of the only way a furnace should be operated. Turning on the air the firemen was told to put in as much coal as he could, something like 12 or 15 shovels, and turning on the air the smoke was stopped immediately.

It was interesting to hear of the temperatures beyond the hearth. If the owners and operators of heating furnaces are satisfied to operate with a stack temperature of 1200° or 1100° they can very easily cut out the smoke without very much change in the furnaces other than introducing air to burn up the carbon and consume these waste gases at a point beyond the hearth and they will not be bothered by the city smoke inspectors.

Another interesting feaure of this discussion is that we have had inquiries as to how Pittsburgh, under the present city ad-

ministration, has been accomplishing smoke abatement from some 84 cities scattered among 28 states, Canada (Toronto and Winnipeg), and even as far away as Australia. I stated to your Secretary that it would be a good thing if they would print a good many extra copies of the Proceedings containing this discussion for these people would be glad to get them.

The discussion tonight has demonstrated that we were not wrong in the statement that there is no kind of metallurgical furnace that can not be operated smokelessly if it is in the hearts and minds and intentions of the owners and operators to do so.

Hearing Mr. Snyder's paper would lead us to say that if we had written it as an encomium on the performance of the city administration's method of handling this smoke question during the past three years, we could not have done any better. But there is undoubtedly a limit to patience and persuasion and even cooperation. There are some men who are not amenable to such means for bringing about compliance with any law which is for the benefit of the people generally, which is the case with laws regulating the production and emission of smoke from stacks. It is a step forward that the Engineers' Society of Western Pennsylvania in their meeting tonight has a discussion on this question. It shows that they are taking hold of this subject that vitally affects not only the interests of the general public and particularly the workingmen and their homes and families, but also questions of economy—and of course, the popular subject today, preparedness.

There have been produced in the country this last year something like 600 000 000 tons of coal. We have consumed about 500 000 000 tons in this country. Through the efforts of bringing about smokeless stacks and by other means, if the owners and operators can bring about such economies as we have listened to tonight through smokeless operation of stacks, or by a saving of ten percent there would be a saving of 50 000 000 tons, which at an average cost of $4.00 per ton would mean a saving to the country of $200 000 000. It seems to me that it is a gratifying thing that the Society has taken this matter up and I am sure it indicates that the spirit of cooperation is entering even into the conservative Engineers' Society.

Mr. A. L. Hoerr:* I think Mr. Henderson's policy of patience and forbearance is a very good one and very necessary one. There are many times when we may know what changes could be made in the iperation of our furnaces to keep the smoke nuisance down, but we are still dependent upon certain men for operating these furnaces and producing from them so many tons of heated or molten steel in a given time, and it is necessary to educate these men as well as the owners. So that while, as he says, all metallurgical furnaces can probably be operated smokelessly it is not possible that they can all be made smokeless at once. Changes must be made, possible in the furnaces themselves, but also we must educate the men who have to deal with them.

Mr. W. G. Graham:* What I have to say is a boost for the stoker on coal fired furnaces. We have five plate heating furnaces and two billet heating furnaces equipped with underfeed stokers all of which are practically smokeless. From the billet furnaces we obtain about three tons per hour. These furnaces are 26 ft. long by 7 ft. wide. The five-plate furnaces average 15 ft. by 7 ft. hearth surface and are used for heating plates and shapes such as are required in car construction.

I have never seen smoke from any stack of these seven furnaces more than five minutes at a time and that very rarely, say two or three times a day of ten hours.

The billets heated are for 6 in. sheet forgings and you all probably know the requirements for that class of work. A uniform temperature of 2300° F. is possible at all times and we have had no trouble meeting the physical test requirements which are:

Tensile	84 000 to 90 000
Percent elongation	20 to 24
Reduction in area	30 to 35%

I do not believe our system of heating could be improved upon for the class of work mentioned, as we can obtain almost any degree of heat required. For car parts to be pressed into

*Chief Engineer, National Works, National Tube Company, McKeesport, Pa.

*Manager, Standard Steel Car Company, New Castle, Pa.

various shapes it is about ideal, but I am not prepared to say that stoker-fired furnaces would be suitable for tin plate bar, but it would seem possible to heat such steel without a mixture of smoke.

I live in New Castle, and if anything the smoke nuisance is worse than in Pittsburgh. Our various mills may not be able to prevent smoke from stacks, but they certainly do produce it. If there is a law prohibiting smoke, it should be enforced.

Mr. J. K. Lamoree:* I think it is possible to cut down the amount of smoke that is made in the manufacture of tin plate, but I do not think it can be eliminated entirely, especially with old equipment.

We have thirty mills and sixty-six heating furnaces, thirty of which are pair furnaces for heating the bars as they come from the steel mill, and the remainder sheet furnaces for heating the sheets after they have been partially rolled to the proper gauge.

The proposition of cutting out the smoke is very closely allied to the proposition of economy—at least we have found it so—and those portions of the remarks of the evening which have brought out the personal element involved in the reduction of smoke, were the ones that appealed particularly to me. In our practice the man who does the firing is a very important factor in the efficient operation of the heating furnaces. We have made many experiments, the same as other manufacturers, with regard to cutting down the smoke; however, we have done it more from the standpoint of economy than from that of smoke abatement. We did find that an increase of economy means less smoke, but we also find that eceonomy depends greatly upon the man who is heating the furnace. When you are paying a man so much a ton for his output he does not care, very much, how much coal he uses, or how much smoke he makes, just so he gets this production. It is, therefore, necessary to approach the question from the viewpoint of the fireman.

The question of putting in new equipment to remedy existing evils depends somewhat upon the money return. You cannot ask a manufacturer to make his product at an increased cost,

*Assistant Master Mechanic, American Sheet and Tin Plate Company, New Castle, Pa.

without giving him some return for his outlay, either in increased economy or better working conditions. We have found that the use of producer gas tends to the elimination of smoke, but we also find that installations of this type are expensive, and, sometimes, not feasible either from lack of space or other conditions, in an old mill such as we have. I think the prevention of smoke will eventually work itself out, as new and better installations replace present ones. At the same time I think the present installations can be bettered somewhat. It is a matter of time and education.

Mr. J. W. Henderson: I would like to say a few words more if I may. When we were first appointed to this office we were told that "You gentlemen are the fellows that are hurting business in Pittsburgh." We do not hear that any more, but we do hear that we should not do anything that will cause manufacturers to increase their cost of production. Now here is a little incident. A certain institution right down town making a very high value product insisted at all our public meetings that they were doing the best they could. There was no evidence that they had their hearts in any desire to prevent smoke, or that they were as much interested in keeping stacks clean as they were in turning out their product. Western Pennsylvania, perhaps, is not very keen for refinements; but this part of the country must grow into an appreciation of what refinements mean, that they mean comfort and money, and there must come a new type of manufacturing in this district. In this instance I speak of, through our pressure before the public, mentioning names of the owners of this property and telling what they had not done, they finally placed a man in charge of their stacks and furnaces. After he had been there a short time and began to get results, one of the heaters said: "You have got to get some way to delay this heat, we will be getting through by noon and that will not do, they will not be willing to pay me the money I am getting now." I promise you that you will get not only the same tonnage from the same furnaces out of the same amount of fuel, but it will improve the product and reduce cost. There is no

question that it can be done, it is only a question of getting the idea into the minds of the people that own the plant.

Mr. F. E. Henry:* I also have been studying the furnace problem a number of years. I know that we have had in mind, to some extent, the smokeless operation of our furnaces; more or less along the line of fuel economy.

In a number of our plants, men have been watching the stacks and when necessary cautioning the men in regard to their operation of the furnace. We have to educate our men along this line, as well as others, but it is more difficult in the tin and sheet mill practice to obtain results, because the men are kept very busy at the face of the furnace charging and delivering the iron. Mr. Lamoree has mentioned the fact that our men are working on a tonnage basis, which is to some extent a handicap to economical operation of the furnaces, but this does not alter the fact that we have been striving for a more economical operation. That is along the personal line.

Those who have studied this problem from the standpoint of producer gas, stoker and hand-fired coal furnaces, and have gone into the details realize that the conditions are far from being favorable to smokeless operation in heating furnaces for thin material, as well as the economical operation, because of the reducing character of flame necessary to protect the material from scaling.

With the hand-fired coal furnace it is practically impossible to get a smokeless stack at all times, but by carrying a deep fuel bed and firing small charges of coal at frequent intervals, we can get the soft or reducing flame and at the same time eliminate a large amount of smoke.

With the stoker or gas-fired furnace it is largely a matter of regulation of the valves, dampers and feed, although with the producer gas furnace this is difficult, if the gas supply is irregular in quality or quantity. A regular gas cannot be expected if the producer is hand-fired and poked. The mechanical poker with automatic feed seems to be the best solution for regular gas,

*Furnace Inspector, American Sheet and Tin Plate Company, Farrell, Pa.

when we take into consideration the class of men usually employed about the producer plant.

It is customary in heating furnaces for thin materials to place the waste gas outlets to the stack near the doors to prevent cold or excess air coming in contact with the iron when the doors are open. The excess air which enters the furnace through the doors passes direct to these outlets and mixes with the partly consumed gases and further combustion takes place in the stack. This eliminates part of the smoke which results from the incomplete combustion.

It is my belief that with new equipment and modern ways of operating, smokeless operation can be eventually accomplished to a degree that would fulfill the rules governing all smoke regulations. New equipment means new furnaces designed for producer gas, stokers or powdered coal capable of close regulation.

CHAIRMAN A. N. DIEHL: I would like to ask Mr. Henry one question. When the desired result is obtained, do the gas analyses show that the percentage of carbon monoxide is an indication of the oxidizing of the plate?

MR. F. E. HENRY: We must have a certain excess amount of CO in the furnace in order to keep the material, which is very thin, especially in the sheet furnaces, clean or free from scale. I have not studied the smoke charts to any extent, but would state that we can approach a point in operation where the smoke leaving the furnace stack resembles steam. A cold charge or heavy firing will change this to a dark or even a black smoke without a change in the damper or air supply. We must have the reducing atmosphere in furnaces heating thin material.

CHAIRMAN A. N. DIEHL: I do not think that manufacturers desire to burn their fuel with an excessive amount of smoke, more, than does the City of Pittsburgh, or any other community for that matter. However, there are operations, where it is metallurgically impossible to operate without a certain amount of free carbon present in the gas. Some producers may also be in a position as to be unable to replace obsolete practices for

more modern methods. In the manufacture of tin plate, wire or other products, having large surfaces exposed, and where a smooth surface is necessary, an oxidizing atmosphere must be avoided. A metallurgical laboratory which I visited within the past few weeks, contained a very efficient and large corps of chemists experimenting on this very subject. Their efforts seem to indicate the necessity of a quantity of carbon in the free state, irrespective of the *CO* content. In fact, an almost neutral atmosphere containing injected soot, seemed to accomplish the purposes they desired.

Mr. M. F. McConnell: Is it not true that there is a desire to keep the temperature of the furnace at a point much below that which would occur in case of perfect combustion?

Mr. F. E. Henry: To a large extent it is true, that the flame must be kept more or less reducing to take care of the irregularity in the heating temperature. The chances for scaling a charge of iron ready to be drawn is greater than those of a cold charge, yet in sheet and tin mill practice it is necessary to have both hot and cold charges in the same furnace compartment. The doors of the furnaces are open at very frequent intervals in sheet mill practice and in tin mill practice the doors are open approximately seven-eighths of the time.

The heat regulation in these furnaces has been irregular, except with recent installations, where an improvement has been shown. On these recent installations we have endeavored to place the regulation of the furnace at one point most convenient to the heater. That is; the gas, air and stack dampers or valves are adjusted from one point. This has improved conditions, but has not altogther eliminated the smoke or the variation of temperatures.

Mr. J. K. Lamoree: From the foregoing remarks, I am lead to believe that perhaps the process of heating tin bars is not quite clear. In tin mill practice the bars, which are 8 in. by a suitable length, and anywhere from ¼ in. to ¾ in. thick, are heated in a pair furnace. When they have reached the proper

heat, they are rolled out and placed back in the furnace, reheated and re-rolled, until desired gauges are reached. This requires that different thickness of sheets go into the furnace for heating at different times. This requires regulation on the part of the heater, which continually introduces the personal element. Irregularity of sizes heated, causes difficulty in using stokers, or any automatic regulation of firing, because the man rolls his pack and puts it back in the furnace and then regulates his fire to the iron to be heated. It may mean rolling 38 gauge, which is very thin, and, in a couple of hours, receiving an order which has to come out 20 gauge, which is a great deal thicker. This requires different regulation of the fire. Incidentally, it is absolutely imperative to heat without any scale forming on the steel, which requires a reducing atmosphere in the hearth. Any scale whatever on the plate makes it unfit for tinning after it has been rolled.

Mr. J. W. Henderson: I wish to ask Mr. Diehl regarding the practice mentioned by him if he knows whether natural gas has ever been used for fuel instead of coal?

Chairman A. N. Diehl: No, I do not. I was referring to coal operations. I understand that it has been demonstrated, by experience that coating plates with soot, did not give the same result as having a free carbon in the flame.

Mr. W. H. Smith:* The method of procedure in eliminating the smoke nuisance in Pittsburgh, as well as other cities, has developed largely through a course of civic laws, the framing of which was in the hands of civil officials. In most cases the law makers, not being in daily contact with the operations incident to the problem dealt with, embodied the errors of restrictions without first determining the limts of practicability of such restrictions. Laws or ordinances affecting this problem should not be enacted unless practical engineering plans are first presented and considered by all parties concerned, and as far as possible having such plans approved as practical by a competent engineer-

*Engineering Department, Ford Motor Car Company, Detroit, Mich.

ing board comprised of engineers who have operated smoke-creating plants or are capable of judging the limitations in their control.

Smoke, generally speaking, is not a physical detriment to the health of a community. It is rather a visible nuisance which has been permitted and has grown with the growth of our industries. To restrict this without a proper course of procedure would bring a hardship to the industries, and possibly to those depending upon them for a livlihood. Therefore, it is proper that engineers should assume interest and initiative as well as responsibility in the ways and means for the control of such smoke nuisances; and such control should not affect a hardship on those concerned, who have been permitted to build and operate heretofore and who have contributed largely to the growth and welfare of the city.

Restrictions that would in any way interfere with such industries' progress would be an injustice unless proper means were devised and ample notice and time given to prepare for eradication.

In the case of granting building permits for new factories or additions which might be creative of a smoke nuisance, plans for smokeless operation should be a requirement in the permit and carried out on such new work.

The method of controlling smoke nuisances in manufacturing industries as discussed here tonight seems to have to do largely with the regulating of fires, which in turn means the economical consumption of fuel; as such regulation generally depends upon the human element, the skill of the operator, there is always the liability of variation; and, therefore, the exact degree of operating will not be obtained at all times.

Mr. Kennedy's suggestion of washing or scrubbing the gases is one deserving of considerable thought, inasmuch as it is in line with the principle that all of the waste products from any plant should be delivered in a condition that is not a nuisance or a detriment to the community in which the plant is located.

You gentlemen will probably be interested in some of the ideas that are being considered by our Detroit engineers for taking care of both smoke and obnoxious gases that are created throughout manufacturing establishments.

Where new installations are made, or changes in old equipment will permit, sufficiently high chimneys should be provided, down draft used, and all waste gases drawn or forced through flues to washers or scrubbers, and delivered to the chimney free from obnoxious matter. This will mean that the incoming air delivered to many departments will be under a pressure, and that the outgoing air from furnaces is received in flues delivered through the washers to high chimneys or stacks. While such gas flues can be located overhead, what seems to be a better plan is to place them in underground tunnels or passageways. Such tunnels will also be the means and ways for help to go to and from their department divisions. In such tunnels will also be located power and water lines, and the conveyances for the supplying of departments, as well as coat-rooms and wash-rooms for the workmen.

Heretofore, smoke control was considered in lieu of its economics. Today it seems to be one of a group of fundamental concerns in engineering responsibilities that should be worked out in conjunction with the matter of health and welfare of the employees and communities, as well as economics. When proper engineering attention is given it, a great benefit to the manufacturing problem will have resulted and the difficulty of curbing or controlling by the civic law will be reduced.

Mr. W. E. Porter:* In the heating of plates such as was spoken of in connection with tin plate, is it customary to cut off the air supply so as not to get too high a furnace temperature, or is the gas cut off? If the gas is cut down, which would be the proper economical regulation, why isn't it entirely a matter of furnace construction for burning coal? A new style house or apartment heating furnace, has a magazine feed, that permits of comparatively high temperatures, almost any desired temperature, but it is a slow feed of coal and gravity feed to the furnace, which would permit of smokeless combustion and at the same time a temperature that would be almost anything desired. I might suggest the feasibility of such a magazine in this

*Assistant Chief, Bureau of Smoke Regulation, City of Pittsburgh.

connection, in which it would not be necessary to admit an excess of oxygen and still have the flame what you want it.

Mr. F. E. Henry: As to the application of natural gas to the heating furnace the air is choked in order to give a reducing flame. I have nothing to say regarding the application of the house heating furnace principles to this problem.

Mr. M. F. McConnell: I believe we all know that the old base burner was a hard coal burner. I doubt if any gaseous coal could be handled under such conditions as Mr. Porter mentions, where the coal coming into the combustion chamber would be subject to heating, the gas being given off.

Mr. W. E. Porter: It is one of the most recent adaptations we have of the magazine, similar to the old house heater, for high volatile coal, and it is being used very successfully in this city in that connection. The reason I mentioned it is this: I had hoped in coming here tonight that I would hear some one who is familiar with the Ringelmann scale who would be able to say whether they could operate certain types of furnace without making scale or pitting the plates and still operate it under No. 3 of the Ringelmann chart. The city ordinance of Pittsburgh, as most city ordinances, takes no cognizance of smoke under No. 3 of the scale. No. 1 and No. 2, viz., 20% and 40% density, are not reckoned with, and they are very liberal with No. 3 and No. 4. One can make smoke of any density in Pittsburgh two minutes in fifteen. I am convinced you can operate almost any heating furnace according to your practice and keep within two minutes in fifteen, with the exception of holdups, as we have heard spoken of, or a break-down in the mill, or something unusual and infrequent of that kind.

Mr. J. R. Knopf: A former speaker has brought up the subject of feeding coal into a furnace firebox from underneath, somewhat like the feeding of certain house furnaces.

This at once brings up the question of the application of

*Engineer, George J. Hagan Company, Furnace and Combustion Engineers, Pittsburgh.

stokers to this work. Almost, without exception, the speakers at this meeting have either doubted the feasibility or the possibility of using a stoker to heat bars or sheets in sheet and tin mill work.

I, personally, know of hundreds of sheet and pair and annealing furnaces being heated by underfeed stokers. The owners of the plants in which these stokers are being used are getting such good results that they could not be induced to go back to former methods of heating. Many of these manufacturers report 25 to 30 percent fuel saving, and some as high as 50 percent. They are also getting a better product. Their bars and sheets are free from oxide and pitting and there are fewer stickers and imperfect sheets than formerly.

The old idea that a smoky flame is necessary for the production of sheets is hardly worth considering in view of the fact that stoker-fired furnaces are operating with so little smoke that to look at the stack without seeing the furnace it would be impossible to tell whether the furnaces were being operated or not. In fact, the main reason for operating a sheet, pair or annealing furnace with smoke is that it is so constructed or fired that any other way of operating it is next to impossible. It has been the speaker's experience to have visited plants where it appeared the workmen had been carefully coached on the necessity of smoke in order to avoid the expense of any alterations necessary to reduce or abate this nuisance.

The question of control of heat has been discussed by various speakers, and the general impression has been given that only with natural or producer gas was it possible to get the nicety of heat control necessary. Here again, the facts brought out by practical experience speak for themselves. Where a superior product is being turned out in increased quantity and at reduced cost, the method of operation to attain this result must be better than the method displaced. This improved result has been attained by stokers in replacing oil, natural gas, producer gas and hand-fired coal. In case of a roll breakage, which would cause the furnace to be idle for any extended length of time, it is just as difficult to control the temperature with any other methods of firing as with stokers.

In heating with a properly designed underfeed stoker, where the main volume of the air is introduced at the point where the volatiles are distilled and the remainder of the air is introduced through the grate bars, gives a very even and easily controlled fire. It also gives a smokeless fire, as the volatiles are distilled underneath and pass up through the incandescent coke bed, and on their way are thoroughly mixed with the air which, being introduced under pressure, can always be controlled by means of a damper.

The quantity of air introduced, of course determines the amount of coal which can be burned, and this again is under the control of the heater, as he controls his coal and air feeds to suit the heat he requires. The notion that a heater must have a lot of valves, dampers and similar riggings handy, so he can vary his mixtures of gas and air to suit his whims and fancies in order to get good results, is one that will not stand close inspection. In fact, the placing of the responsibility of getting the proper mixture for perfect combustion in the hands of the heater merely insures the production of smoke and waste of fuel, as he is always prone to err on the side of feeding an excess of fuel rather than the proper quantity, or an excess of air, which latter would cause scaling of the sheets. With a certain underfeed stoker it is almost impossible for the heater to waste fuel in this way, as the quantity of coal burned is controlled by the quantity of air introduced, as stated heretofore, and to slow down the fire the heater must necessarily reduce the amount of air introduced.

It is not necessary in sheet and tin mill heating, as many suppose, to be continually changing the quantity of heat coming from the firebox; in fact, it is much better to be able to get an even and continuous flow, which can be controlled for each main cycle of operation. To this operation the underfeed stoker, if properly designed as mentioned before, is admirably adapted.

Chairman A. N. Diehl: I think, from a community standpoint, that Pittsburgh's idea would be to remove the smoke as far as possible and still keep our operations at the present rate. With our present methods it may be hard to accomplish both these results. If cleanliness only is desired, the easiest way is to "bank

the fires." I do not think, however, this is the method we desire to apply. Smoke as a result of carelessness can be minimized but, as a result of operation, should be accepted. I think possibly the references to the careless heater and his responsibility for the smoke has been emphasized possibly a little more than it should be. In our modern organizations most plants have metallurgical engineers, on whom the problem of solving careless combustion devolves, and on them rests much of the responsibility of fuel conservation and civic cleanliness.

I want to take this opportunity of thanking the members of the Metallurgical and Mining Section for the assistance they have given the Chairman in the past year, and also especially the Secretary, who has usually done most of the work. Those who have been kind enough to present and discuss the fine papers we have had can rest assured of the gratitude of the Society for their efforts during the past year.

BURNING BLAST FURNACE GAS UNDER BOILERS

A Topical Discussion

Mr. Frank E. Leahy:* The blast furnace plant at the National Works, consists of four furnaces and 17 stoves.

The gas from three furnaces is passed through Brassert dry cleaners and the gas from the fourth receives no dry cleaning, but passes into the same main as the dry cleaned gas.

The gas from the four furnaces is consumed in the stoves, boilers and gas engines.

An approximate heat balance of the gas found in useful work figured from the monthly reports shows:

Boilers	58.26%
Stoves	26.21%
Gas Engines	2.87%
Unaccounted for, etc.	12.66%

DESCRIPTION OF BOILER HOUSE

General: The boiler plant at the blast furnace department consits of 11 600 rated boiler horsepower of Babcock & Wilcox and Altman & Taylor makes, located in two houses designated as boiler house *A* and boiler house *B*. Boiler house *A* is interconnected with boiler house *B*, and boiler house *B*, is interconnected with a large coal fired boiler house designated as boiler house *F*.

Boiler house *A* contains 24 boilers with a combined rating of 7080 b.h.p. and boiler house *B* contains 9 boilers with a combined rating of 4520 b.h.p.

*Steam and Hydraulic Engineer, National Works, National Tube Company, McKeesport, Pa.

The boilers in houses *A* and *B* are equipped with grates for coal firing should this be found necessary. The combustion chambers are large and are of the Dutch-oven type, of sufficient capacity to permit the combustion of the gas to be completed before reaching the tubes.

Each boiler is equipped with two stationary burners of the common box type, overhead construction, with a Wilson bell valve, to control the supply of gas to the burners. The burners are set central in the box and placed to give the maximum aspirating effect with about 0.05 in. suction pressure in the firebox.

Dampers: Each boiler is equipped with a single stack and damper, but as it was considered dangerous to use the dampers for fear of forcing the fire through the front of the boilers in case of a slip on the furnaces, a more desirable method was found by opening and closing a door in the base of the stack to check the draft to the desired point. This has worked quite satisfactorily and will take care of the slips without any forcing of the flame through the front of the boiler.

Operation: During the month of October, 1916—the following practice was obtained:

	Boiler House *A*	Boiler House *B*
Boiler capacity in operation b.h.p.	6436	4245
Capacity developed b.h.p.....	7778	5217
Percent of rating developed by capacity in operation.....	118.5%	120.7%
High rate of evaporation for four consecutive hours	122.7%	148.8%

This is fairly respresentative of practice obtained in these houses.

The draft in the firebox is maintained as close to 0.05 in. suction of water pressure as possible, this is done by adjusting the door in the base of the stack as previously explained.

No coal is fired under these boilers but in case of shortage of gas; steam is supplied from the coal fired house to take care

of such periods. Over a month the equivalent of 1200 to 1400 b.h.p. is required to maintain operation. During delays due to casting, etc., draft is at times completely checked which enables us to maintain the temperature in the firebox sufficient to ignite the gas when it is available. This arrangement enables the operators to confine their attention to gas burning and thus secure the best results from the proper combustion of the gas.

Tests: A test upon one of the gas-fired boilers in boiler house *B* burning furnace gas was made and published by Mr. A. N. Diehl, in the year book of the American Iron and Steel Institute, year 1915.

The following is a summary of the results:

Percent of rating developed.....	155
Maximum efficiency.....	75.0%
Minimum efficiency.....	70.0%
Average efficiency.....	72.3%

This was run on a boiler in service and operated by the regular fireman so as to get the results under actual operating conditions.

Mr. H. C. Cronemeyer:* The following remarks apply only to the use of uncleaned blast furnace gas, the writers experience with its use under boilers being limited to this phase of the subject.

The difficulties of keeping the boiler clean have seemed to favor the water tube boiler with vertical or steeply inclined tubes, since in these the dust carried by the gas does not deposit on the tubes in such large quantities as in a boiler with horizontal or slightly inclined tubes. In general, the simpler the disposition of tubes the better, since elaborate systems offer greater opportunity for dust to collect in places difficult of access, and a high initial efficiency of a boiler suited for clean gas or coal firing may, after a few hours operation with dirty gas, drop below an only moderate, but better sustained performance of a simpler design. As an example of the influence of dust deposits may be

*Engineering Department, Jones & Laughlin Steel Company, Woodlawn, Pa.

cited the results of a 48 hour observation on a vertical water tube boiler, where hourly readings were taken of the temperature of the escaping gases. For the first twenty-four hours there was an approximately uniform rise of about 6° F. per hour, after that the temperature fluctuated over a range of about 60° F. as the accumulations of dust dropped off and built up again. The temperature at the end of the 48 hour period was 160° F. higher than when the observations commenced with clean tubes. Normally, of course, the accumulation of dust for such a long period of time, without blowing off the tubes with a steam jet, would not be permitted.

Boilers should be set singly rather than in batteries of two or more, so that they cool off more quickly for cleaning, and also be accessible from all sides. A boiler fired with dirty gas is an extremely disagreeable thing to clean, especially when not fully cooled off, and should be so designed that at least part of the cleaning operation can be performed from the outside of the setting.

In complicated settings there are almost certain to be pockets offering opportunities for dust accumulation. If these accumulations are not removed regularly, they will bake hard, and under certain conditions will interfere with expansion and contraction to an extent that the boiler will be seriously distorted. The writer has knowledge of a case where the gradual building up of dust against a drum caused a small movement toward one side during every heating up after a shutdown, the cummulative effect of which would have pushed the drum clear off its support, had not this condition been discovered during alterations on the setting.

Boilers of rated capacities of 300 to 400 h.p. are favored for the blast furnace boiler plant. About 3500 to 4000 h.p. in units of this size constitutes a suitable plant for one 500 ton blast furnace operating on a normal coke consumption. A unit of the latter size can readily be hand-fired with coal by one fireman if the gas supply is cut off during the relining of a furnace, and on the other hand, the cutting out of service of one unit in a plant of the stated capacity does not impose an undue overload on the remaining boilers.

The most desirable burner is one that insures a thorough mixture of gas and air before their entry into the furnace of the boiler. The rate of combustion of blast furnace gas is relatively slow, and if the mixture of gas and air takes place only after reaching the furnace, the flame will be carried far up among the tubes. With strong draft and consequent high velocity of the gas, the cooling effect of the tubes may extinguish the flame before combustion is complete. This fact is readily apparent, if one observes the gradual change in the color of flame from a transparent rose in the combustion chamber to a dull dark red at the time of its disappearance among the tops of the tubes. If the characteristic bluish tinge of carbon monoxide is still visible at this time, it may be inferred that combustion is not complete.

Further, if the flame extends over into the second pass there may be in some types of boilers not sufficient difference in the temperatures of the two passes, to the impairment of circulation and the quality of the steam. It is this condition, as much as low efficiency when forced, which makes it inadvisable to operate boilers much above rating on this fuel.

From the foregoing it is evident that in the interest of efficiency the modern mixing burner must replace the old style burner, through which gas and air enter in strata, with consequent delay of complete mixture, and its resultant poor combustion. When the gas pressure varies, the injector effect of a good mixing burner also helps to regulate the quantity of air drawn in with the gas, in a higher degree than does the plain burner. While the writer has not had opportunity to make personal observations on the subject, an interesting set of diagrams has been furnished him by Mr. C. L. Dudley, which show this feature quite clearly. Comparison is made between a rectangular burner with central air passage, the mixture taking place in the combustion chamber of the boiler, and a well known type of modern aspirating burner where the mixture commences within the burner. With the former there is for every variation of gas pressure an abrupt change in carbon dioxide and oxygen content of stack gases, an increase of such pressure being accompanied by a rise in CO_2 and a decrease of O. Sufficient air was

admitted at all times for complete combustion and no CO was shown.

In the second burner the same tendency was also noticeable but in a much less degree, the proportion of CO_2 and O remaining nearly constant for large fluctuations of gas pressure. Under these conditions it is possible to limit the air supply more nearly to theoretical requirements and yet obtain complete combustion, than when a variable gas supply must be burned with an almost constant air supply, as is the case when the air supply is governed only by furnace draft.

In view of the greater length of time required to develop fully the flame of blast furnace gas than that of coal fire, it appears that in dimensioning the furnace of a boiler using the former fuel, length is of primary importance. The cross sectional area can be relatively small, as the tendency of the flaming jet issuing from the burner is to travel by the shortest path, with little spreading out. Proceeding on this theory we might consider the combustion chamber as the first pass of the boiler, without however containing any tubes, so that the long flame may be nearly burned out before striking the tubes, and completely so before any still unburnt gas is chilled below the temperature of ignition. Something along this line has been obtained by building a curtain wall across the combustion chamber, compelling the flame to travel downward before rising again among the tubes. By this means a 400 h.p. boiler was operated at 145% rating at good efficiency. With dirty gas this introduces a disagreeable complication in that the flue dust carried by the gas now fuses on the walls of the combustion chamber, in which condition it is of course much more difficult to remove than when deposited as loose dust in the bottom of the last pass, but the phenomenon clearly indicates that we are obtaining better heat utilization, since we have a higher furnace temperature.

Neglecting for the moment the element of installation cost, the next logical step in the attainment of higher efficiencies would be recuperative preheating of the air of combustion by the stack gases, in order to increase the temperature of combustion. Under present methods this temperature runs about 1900 to 1975° F. as compared with 2500 to 2700° F. in a coal fired furnace. The

expense of an installation of this kind would of course considerably exceed that of the ordinary boiler setting. A draft fan must be provided, since the interchange of heat between stack gases and air would so reduce the temperature of the former, that sufficient draft could not be obtained with a stack of normal dimensions. On the other hand, this greater cost would be more than off-set by the ability to operate at largely increased capacity, since the greater heat in the gases escaping from the last pass is not lost, but is returned to the boiler in the preheated air. In case a sufficiently high furnace temperature can be reached by the above method there would be considerable promise of success for a device now being tried out to overcome the difficulties of dirty gas without going to the expense of a gas washing plant. Briefly it consists in providing complete mixture of gas and air in a vortex furnace of ample capacity, for the attainment of a temperature that will fuse the dust and allow it to be drawn off as a liquid slag.

In comparing the relative merits of a two-pass or three-pass boiler the writer favors the latter. A coal fire gives off its heat by radiation from the incandescent fuel bed as well as by contact between the tubes and the hot gases, so that the heat transfer is very rapid in the first pass and less heat absorption is required in the later pass or passes, but in the gas fired boiler the heat transfer is almost wholly by convection, and during the short travel through a two-pass boiler there is not sufficient time for giving off completely the sensible heat of the gases. The writer knows of an instance where the temperature of the stack gases from a two-pass vertical boiler was reduced 85° F. by the insertion of three tiers of cast iron horizontal baffles in the second pass, which caused the gases to zig zag across the tubes and lengthened the time of contact.

Burning coal and gas together in the same boiler furnace cannot be recommended from the standpoint of efficiency, as the draft requirements of the two fuels differ and usually the air supply to the solid fuel would be insufficient. However, a boiler foreman recently made the statement to the writer that when firing a low grade slack he found it to advantage to maintain a light gas fire at the same time. The only theory that can be

offered in explanation of this fact is that the stack draft on the boilers in question does not burn the solid fuel with sufficient intensity to maintain a good stack temperature. The products of combustion from the blast furnace gas on the other hand reach the stack at a temperature which is high enough to induce a strong draft for supplying air to the coal on the grates. This method of operation is thermally efficient only as long as the gas fuel is used sparingly, so that the major portion of the air drawn into the furnace is left available for the coal.

When only the blast furnace plan proper makes demands on the steam produced from its gas, the supply of this fuel is always sufficient under normal furnace operation to make additional coal firing unnecessary, and straight gas firing suffices. But when, as is usually the case, steel works and rolling mills, as well as a power house are included in the plant, provision must be made for coal firing also. A good system of operating the boilers ranged along the gas main is to fire gas alone in the boilers nearest the source of gas. Those farther removed, which would first feel a shortage of gas, would be adapted to use coal and gas together. During periods of normal gas production only enough coal is burned in the latter to maintain a good fuel bed, on which can be quickly built up a strong fire whenever the gas pressure weakens. Normally the ash pit doors are opened slightly to maintain a slow fire and are opened wide when the demands for steam cannot be met with gas fuel alone. The proportion of boilers adapted for both kinds of fuel to those arranged for straight gas firing is about two to one.

When plant proportions are such as to call for steam supply greater than can be developed from the number of blast furnaces in the plant, the excess must be furnished by straight coal firing which has nothing to do with the present discussion.

A boiler fired with dirty gas should be taken out of service for cleaning about every 12 to 15 days and replaced by a spare. In order that cleaning may not be delayed because another boiler happens to be off for repairs, at least one additional spare should be provided for each group that is taken as the basis for the operations of the cleaning gang.

In conclusion the writer ventures the opinion that while the gas engine no doubt will be the correct thing to install in many cases, the steam boiler joined with the highly efficient steam turbine of large size will continue to hold its own for some time to come. The possibilities of large saving in steam generation have only begun to receive attention in comparatively recent times, and when the boiler is designed, erected, and operated with the same care and skill as a high grade engine or turbine, the steam engineer need not feel any apprehension of being compelled to give way to the gas engine operator.

Mr. Herman C. Siebert:* I will limit my discussion to the subject of gas burners, which, as everybody who has blast furnace boilers knows, is just as important as the boiler itself. We made a number of experiments with various burners in connection with different boilers and plotted their air aspirating characteristics. These are given below:

The common type of burner as applied in our plant and in use in most blast furnace plants is shown in Fig. 1. We have an auxiliary bridge wall in the furnace and a coal grate between it and the main bridge wall. We have a metal screen which permits varying the air opening between boiler and burner. The amount of air is varied by moving the screen in and out over the burner. The characteristics of this type of gas burner is shown in the figure, which shows that the proper amount of air is aspirated at a pressure of two inches, when the screen is open. When the screen is closed correct amount of air is drawn in at one-inch gas pressure. It will be noted that at all other gas pressures the air supply is positive or negative in amount of excess.

Fig. 2 gives characteristics for certain types of aspirating burners, such as the Bradshaw, Fig. 2a; Kling-Weidlein, Fig. 2b; Fraser, Fig. 2c. It is similar to that of the burner of Fig. 1, except that it aspirates the proper amount of air at a different gas pressure. The feature of aspirating the proper quantity of air at any gas pressure is merely a question of the proper port area. Some burners have openings for so-caled secondary air. The

*Experimental Engineer, Duquesne Works, Carnegie Steel Company, Duquesne, Pa.

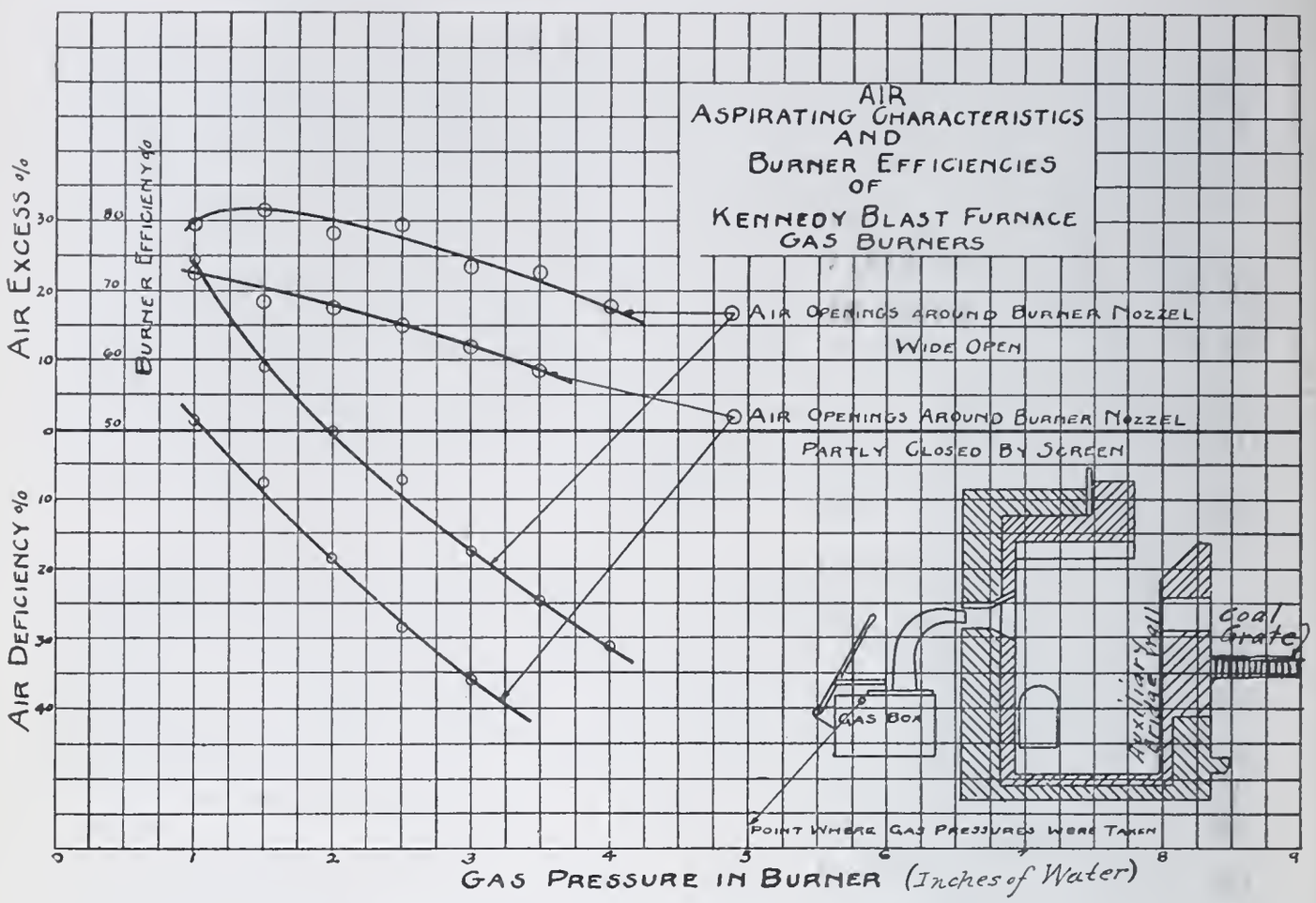

Fig. 1. Air Aspirating Characteristics and Burner Efficiencies of Kennedy Blast Furnace Gas Burners.

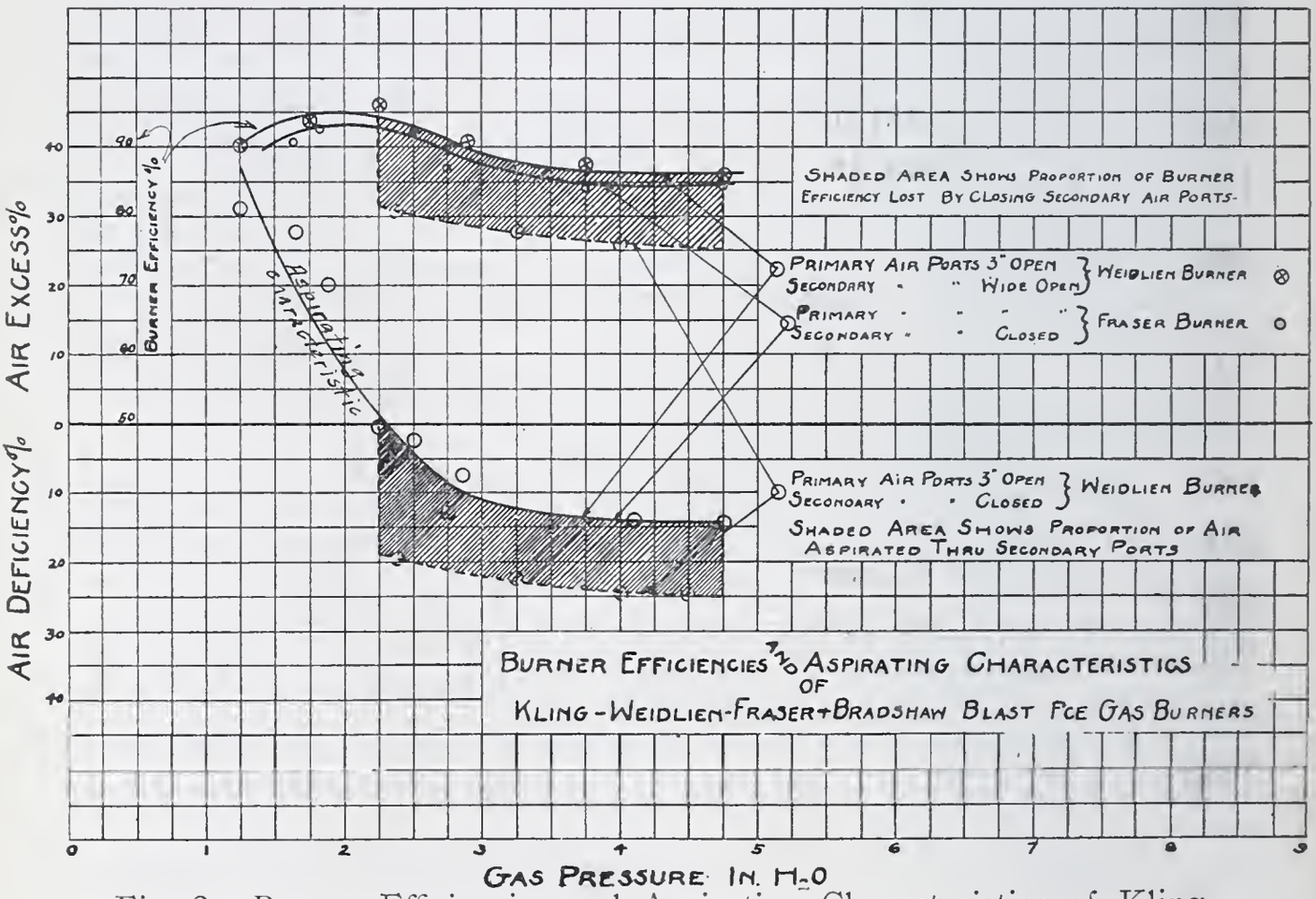

Fig. 2. Burner Efficiencies and Aspirating Characteristics of Kling-Weidlein-Fraser and Bradshaw Blast Furnace Gas Burners.

relative amount aspirated by such secondary ports is shown by the cross-sectioned area in Fig. 2.

In Fig. 3 is shown the characteristic for the burner shown in Fig. 4, which indicates what can be accomplished in the way of air supply if the port area is large enough and is varied to suit different gas pressures. In this case the air supply was controlled by gas analyses taken from the combustion chamber and the port area varied accordingly.

Fig. 5 shows two characteristics, the curve to the left being for burner *A*, Fig. 6, the one to the right for burner *B*, Fig. 6, which also gives data for port areas and velocities for air and gas.

It will be seen that burner *A* was limited to a low gas pressure on account of the large gas port area, while burner *B*, with

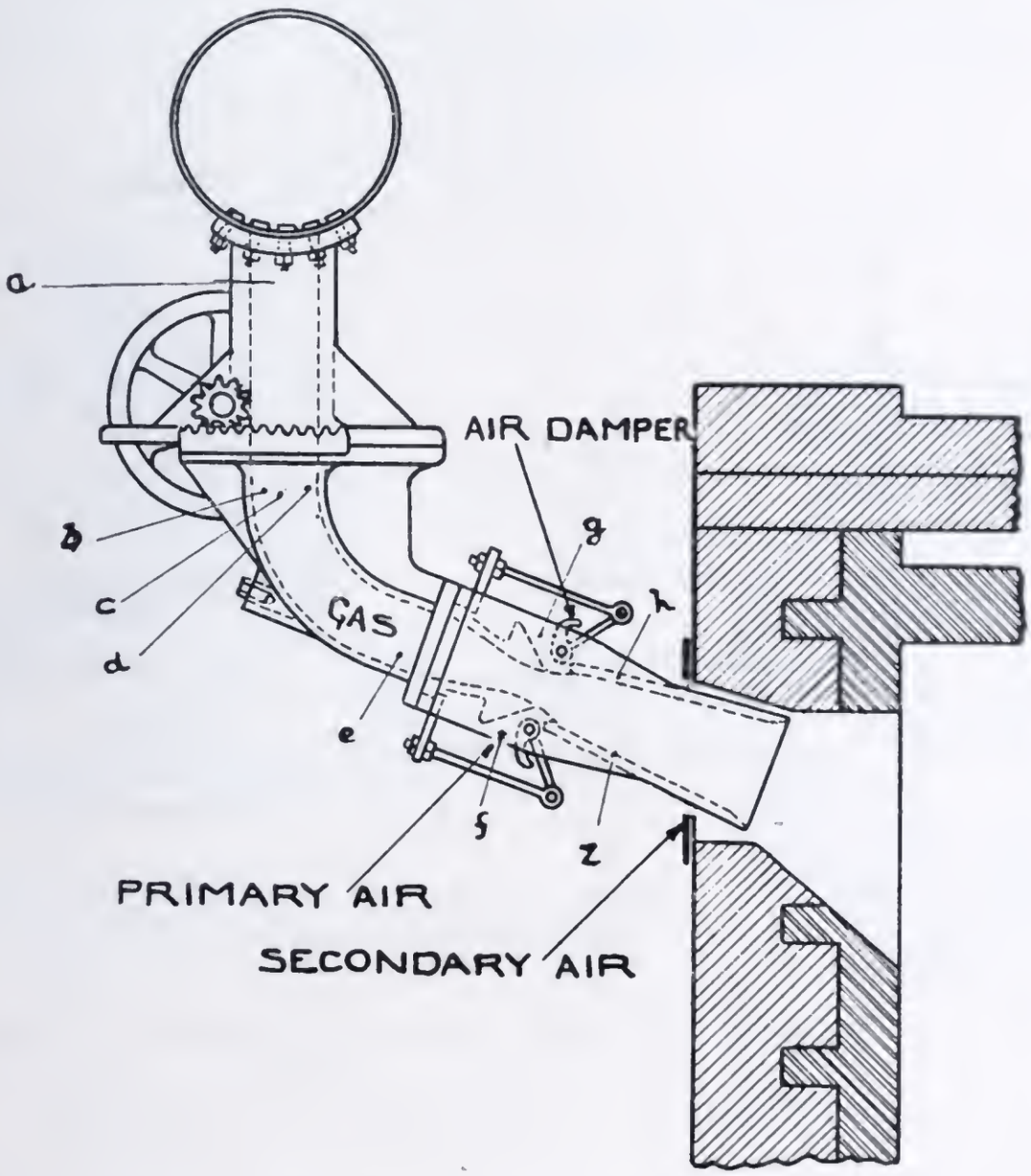

Fig. 2a. Bradshaw Burner for Blast Furnace Gas.

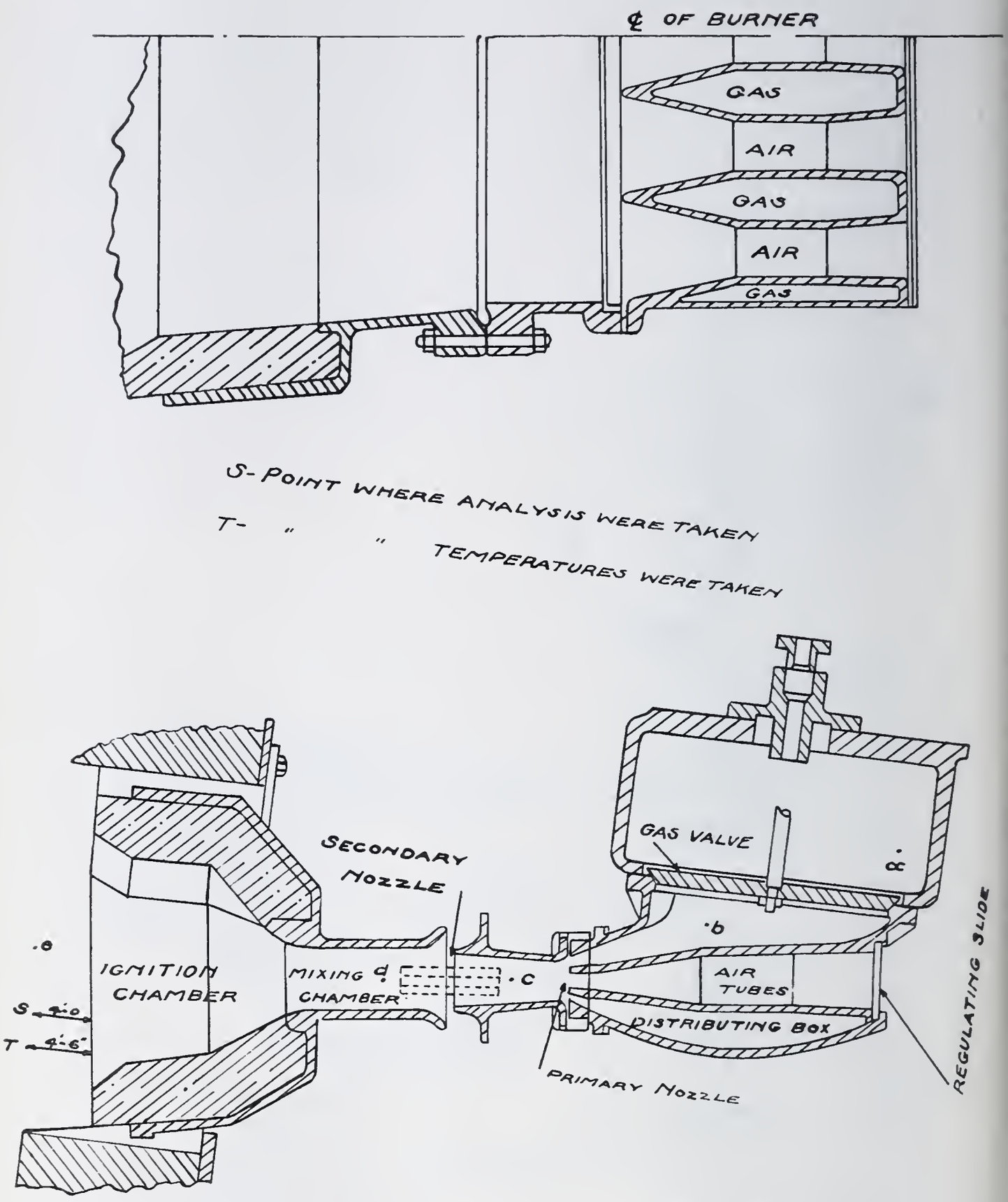

Fig. 2b. Kling-Weidlein Blast Furnace Gas Burner for Boilers.

a considerably smaller gas port area, could be operated at a much higher pressure.

The temperature of combustion for burner *A* was 1500° F., and for burner *B*, 1970° F. The boiler ratings developed were 90 and 157%, respectively (90% rating having been developed by burner *A* as used originally, i. e., before gas port area was reduced, as shown by cross-section lines in the figure). The drafts in the air pipes of burner *A* were 0.2 in. and in burner *B*, 0.75 in. water column. Four burners supplied an 823 h.p. Stirling boiler.

We also made some experiments on the mixing burner shown in Fig. 7. Here an explosive mixture was burned, which left the nozzle at a velocity greater than the ignition velocity, which for blast furnace gas is very low. With that type of burner we developed up to 270% of boiler rating.† Unfortunately, the type of boiler available was a B. & W., nine tubes high, and the efficiency

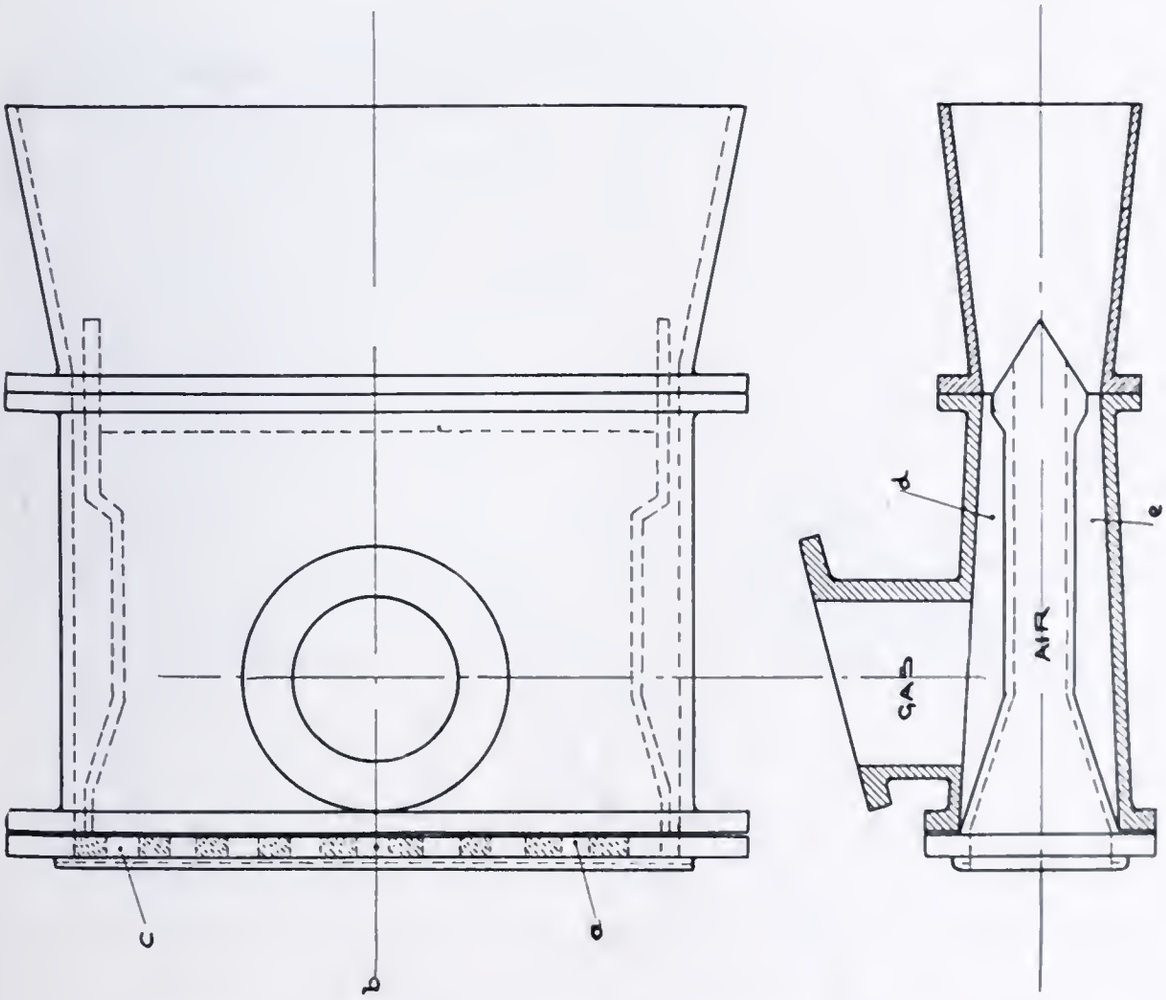

Fig. 2c. Fraser's Modification of Bradshaw Gas Burner.

†For detailed test data see Proceedings of American Iron and Steel Institute, October, 1915.

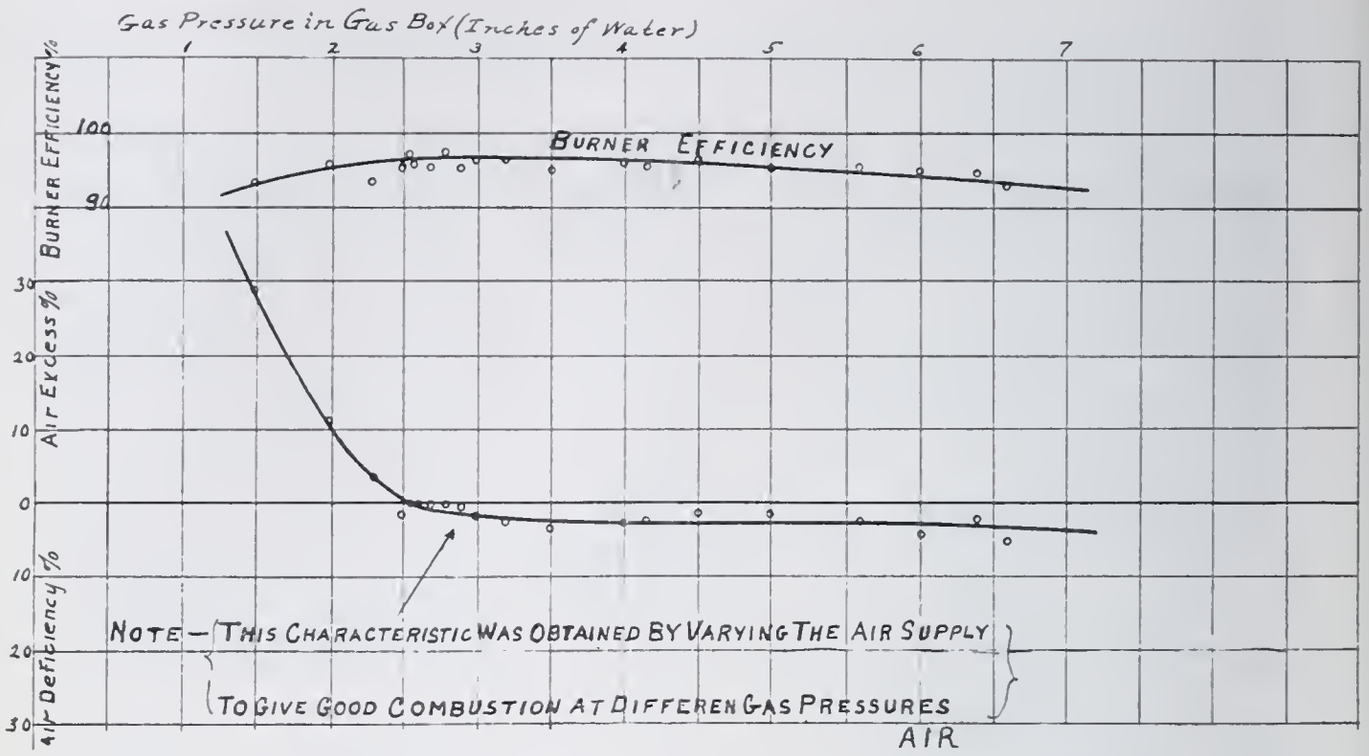

Fig. 3. Air Aspirating Characteristics and Burner Efficiency of Blast Furnace Gas Burner.

(See Burner Shown in Fig. 4.)

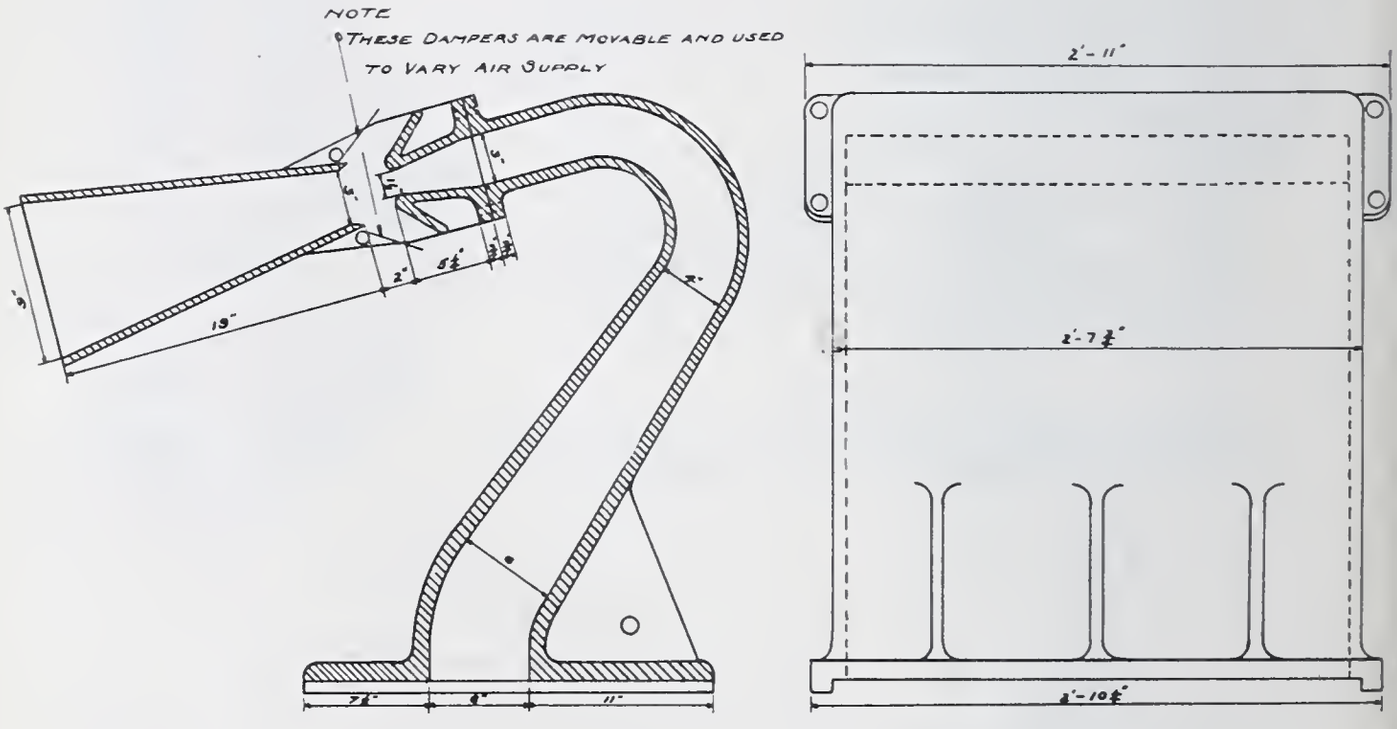

Fig. 4. Aspirating Burner for Blast Furnace Gas.

was not as good as can be gotten in a boiler with a greater number of tubes in height. The maximum efficiency we obtained was about 68%, the average being 64 to 65%.

We had both large and small combustion chambers. It is often claimed that blast furnace gas can only be burned successfully in a very voluminous combustion chamber. That is true if using the ordinary burner, which has a very limited air aspirating characteristic. But if there is introduced air under pressure and gas and air properly mixed, there is no need for a voluminous combustion chamber.

With this burner temperatures of combustion were developed up to 2250° F., with both large and small chambers.

Mr. E. D. Leland:* Did the flame end and was combustion completed three feet from the burner?

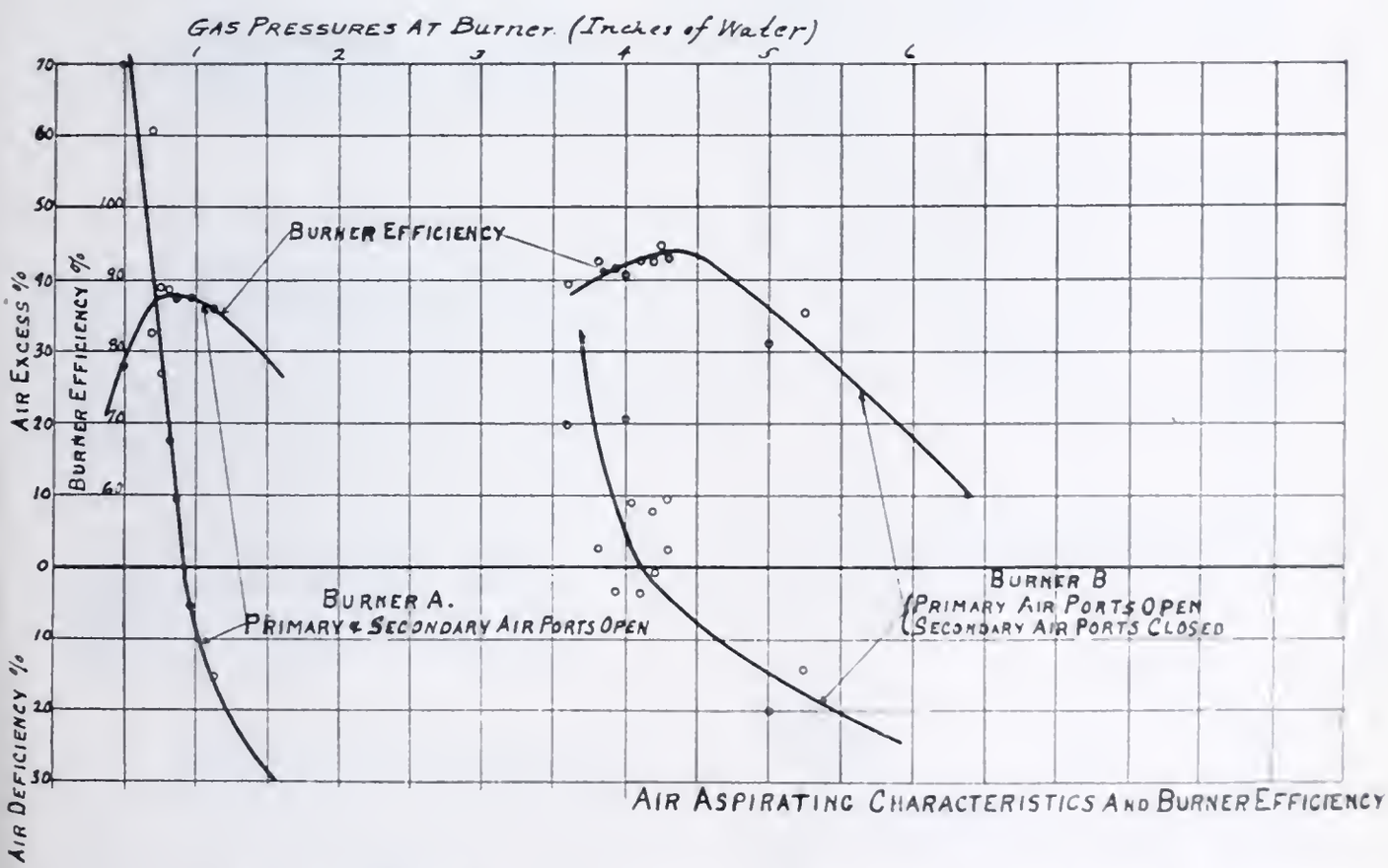

Fig. 5. Air Aspirating Characteristics of Burners *A* and *B* as used on 823 h.p. Stirling Boiler.

(See Burners Shown in Fig. 6.)

*Superintendent of Compressing Stations, Philadelphia Company, Pittsburgh.

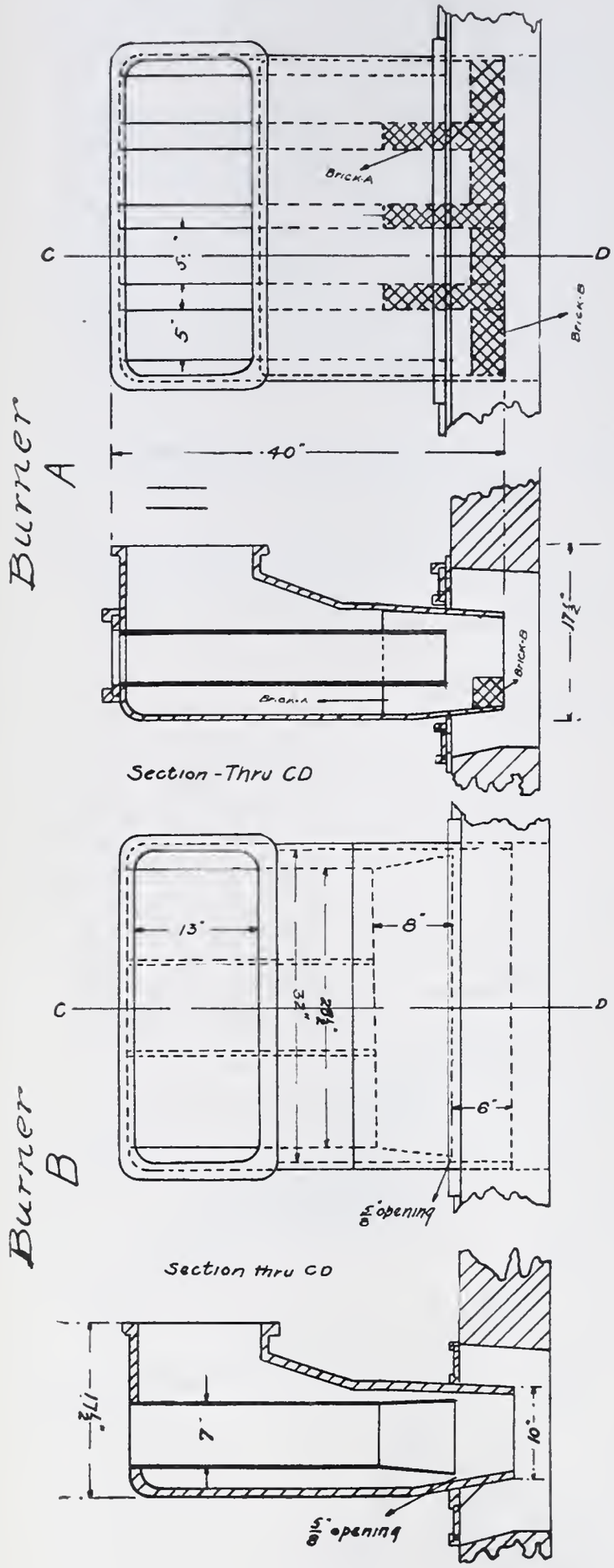

Velocities of Gas and Air thru Burners

Based on C.C. analyses

Boiler rating	net Area of Air Ports □'	net Area of Gas Ports □'	Air Vel.ty Ft / Sec	Gas Vel.ty Ft / Sec
148 %	7.52	4.8	23.8	42.6
142 %	7.52	4.8	20.6	41.6

Note: These figures include area of Secondary air ports.

▩ = Inserted bricks for preliminary tests

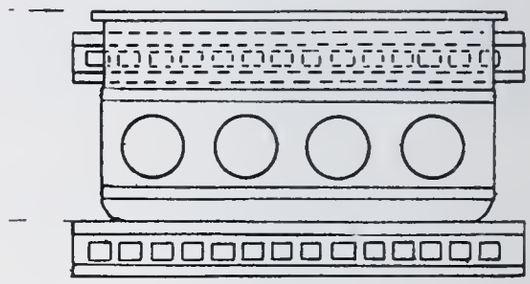

Boiler rating	net Area of Air Ports □'	net Area of Gas Ports □'	Air Vel.ty Ft / Sec	Gas Vel.ty Ft / Sec
137 %	5.54	1.17	19.7	155
128 %	"	"	19.8	144
156 %	"	"	23.0	176
102 %	"	"	15.0	113

Note: These figures do not include area of secondary air ports. These were kept closed during the tests.

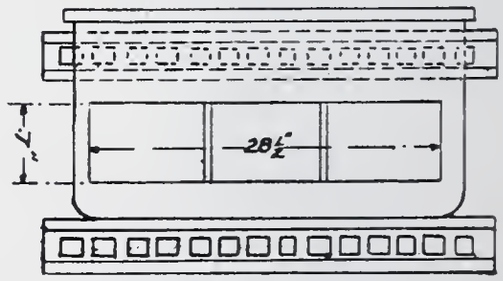

Fig. 6. Blast Furnace Gas Burners *A* and *B*.

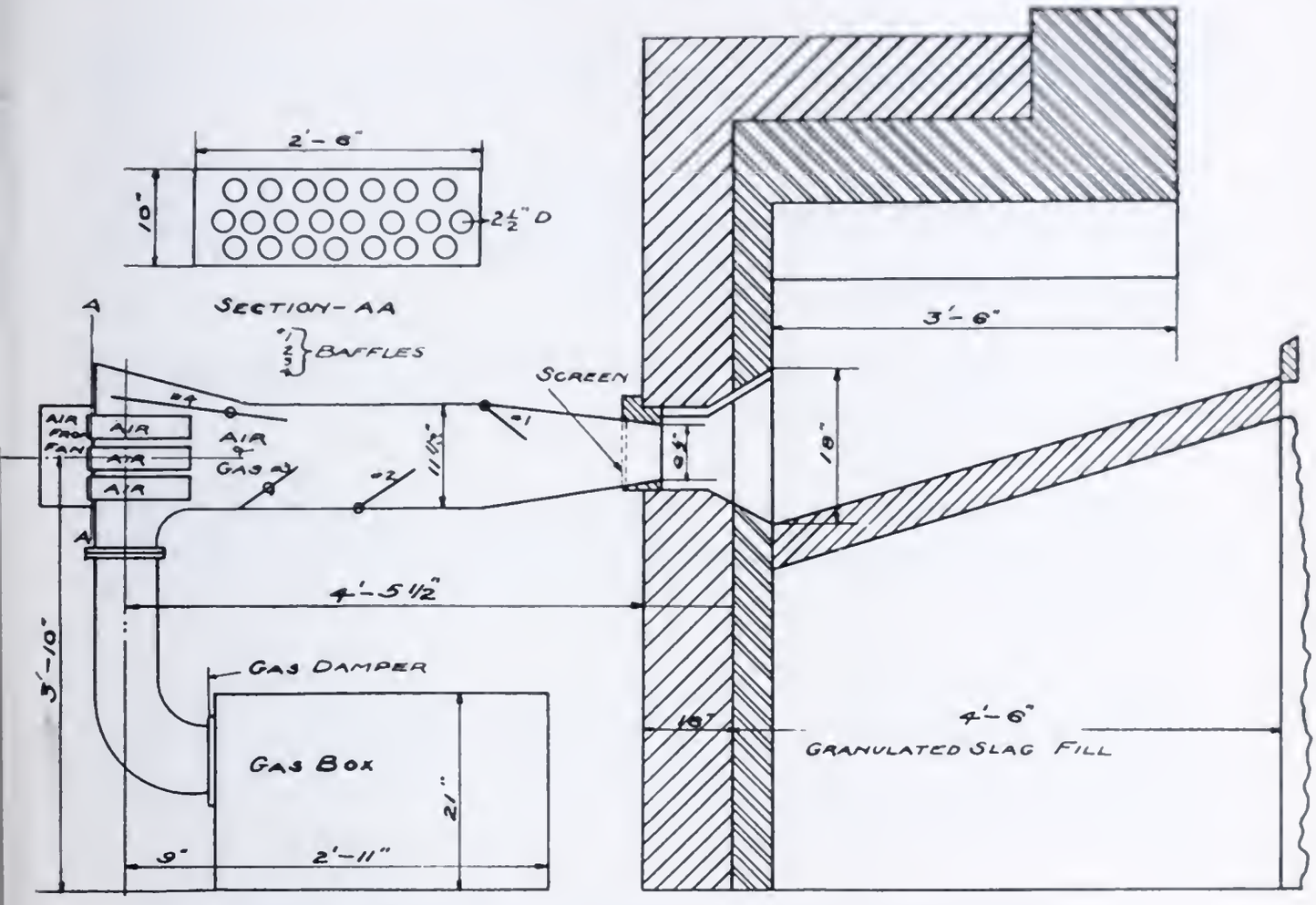

Fig. 7. Forced Draft Burner for Blast Furnace Gas.

Mr. H. C. Siebert: Oh, yes, there was no flame in there at all. The subject of burners is quite elastic, as you see from the sketches. All types have their point of best economy, and if you operate them at that point you are all right. But, of course, the boiler capacity is limited to the burner.

Mr. S. G. Brigel: What gas pressure prevailed under the conditions shown on the last sketch, and at what pressure did you use your air?

Mr. H. C. Siebert: The gas pressure was anywhere from two to eight inches. When we had a high gas pressure we introduced a relatively large amount of air, and when we had a low gas pressure we throttled the air, always to suit the conditions of best combustion as indicated by the analyses in the combustion chamber.

The air pressure was three inches at the fan. At the burner it was about two and one-half inches. We had a normal pressure

varying from one inch to one and one-half inches in the mixing chamber of the burner.

Mr. E. D. Leland: What was the relative value of the aspirating effect as compared with the natural draft of the boiler? I understand you adjusted the damper.

Mr. H. C. Siebert: The stack draft in the combustion chamber was very small, never more than 0.1 in.

Mr. H. C. Cronemeyer: Did you have any difficulty with flue dust at that point with high temperature, and did the dust fuse in the firebox?

Mr. H. C. Siebert: None whatever. About every 24 hours we had the fireman put in the regular steam nozzle and blow out the dust as best he could. It did not have time to fuse; it blew right out through the boiler.

Mr. S. G. Brigel:* Regarding the subject of the discussion, relating to "General Description of Boiler Plant," I am of the opinion that the design of the boiler has a decided influence on the efficiency obtainable. In that respect conditions appear to differ with regard to the gas fired boilers as compared with coal fired boilers. In referring to the various makes of boilers I of course discard all one-pass boilers, such as Cahall & Wheeler boilers. The efficiency of these boilers is bound to be low. What I would like to do is to make a comparison from a gas firing point of view between Babcock & Wilcox, Rust and Stirling boilers. I have run quite a large number of tests on all three types of boilers and as a result I have come to the conclusion that from a gas firing point of view the Babcock & Wilcox boiler is the best heat absorber and allows of the largest overload, without undue loss of efficiency. The Rust & Stirling boilers appear to have approximately the same capacity for heat absorbtion. Choosing between these two, I would surely give the preference to the Rust boiler, since the one large baffle in the Rust

*Secretary, Huessener Engineering Company, Oliver Building, Pittsburgh.

boiler is more substantially built and much more easily kept in repair than the three baffles in the Stirling boiler.

Running Stirling boilers on loads varying from 130 to 160% I have found stack temperatures for complete combustion with low excess of air of between 600 and 650° F., and in the case of Rust boilers, I have found similar loads coinciding with similar temperatures. On the other hand, wherever I have run Babcock & Wilcox boilers, I was struck with the peculiarity that stack temperatures did not rise nearly as quickly with an increase in load. I have as a matter of fact, a large number of figures taken during regular operation on over 100 Babcock & Wilcox boilers fired by gas exclusively that show stack temperatures ranging from 530° F. to 600° F. for an average load of 165%. There does not appear to be much difference in any of these boilers when they are run on low loads of from 90 to 100%. With otherwise perfect combustion conditions and air-tight boiler settings, the stack temperatures were for all three types of boilers in the neighborhood of 500° F.

As regards the rated capacity of boilers, I feel inclined to think that with unclean furnace gas, it will, as a rule, not be safe, from an economical standpoint of view, to go over 150% rating as it will otherwise be extremely difficult to keep the boiler reasonably clean from dust or scale during operation. The number of boilers should be ascertained in such a manner that, where unclean gas is used, no boiler should be allowed to run longer than 30 days without being laid off for cleaning. There should always be a sufficient number of boilers so that the steam necessary for running the plant can be raised without unduly forcing them.

For instance, in the case of a furnace plant using 500 tons of coke a day, equivalent to 41 600 lb. per hour, the plant will be doing well when generating 150 000 lb. of steam per hour, which corresponds to approximately 4350 rated boiler h.p., so that assuming a constant overload of 145%, 3000 rated boiler h.p. ought to be in operation continuously.

For a plant of this description, I would consider 8-500 h.p. boilers an ideal equipment, so that the regular load would be

125% in case one boiler is off, and the emergency load, in case two boilers are off, would not exceed 140%.

As far as the design of the firebox is concerned a large so-called Dutch oven is an advantage wherever the mixing of gas and air is to take place in the combustion chamber. Nor have we been able to notice that the economy of a boiler is at all affected by a Dutch oven where the mixing of gas and air takes place in the burner before ignition. On the other hand, analyses of the combustion gas taken in the combustion chamber of the boilers without Dutch ovens, have shown that complete combustion with an excess of air of less than 5% can be obtained as well in them. The baffling of gas fired boilers plays a particularly important part in the economy. Losses through short circuiting of the products of combustion are increased by the fact that very frequently the proper combustion is interfered with by the short-circuiting of the draft. Gas being a very elusive fuel must be burned instantly as it enters the combustion chamber. It will generally be found that stable conditions in the combustion chamber are of the utmost importance. Eddy currents will usually interfere with quick combustion and allow some of the gas to reach the first bank of boiler tubes before the combustion is completed and greatly decrease the efficiency. I have found that large holes in the baffles have invariably produced disturbances of this character.

As regards mixed firing of coal and gas all that can be said is, keep away from it. The conditions for coal firing and gas firing are so essentially different, that the result will usually be that both fuels are not properly utilized. This disadvantage is greatly increased wherever blowers are used. The vertical updraft of the blowers creates strong eddy currents and results in a large percentage of the fuel gas passing through the boiler unburned. Comparative analyses of the straight gas firing and mixed coal and gas firing, using Parsons blowers, have shown that an analysis of 24% CO_2; 0.2% O_2 and no CO was instantly changed when mixed firing was resorted to into 16% CO_2 with varying amounts of oxygen, and of unburnt CO ranging up to 5%. In the case of insufficient gas, it will therefore surely pay to shut a number of boilers off gas and put them on coal

firing exclusively without interfering with the other gas fired boilers. In this respect it must be kept in mind that gas combustion is much more affected by air entering the combustion chamber at the wrong place than coal firing.

When I run a gas fired boiler equipped with Bradshaw burners, I always seal the boilers against all air and rely on primary air only. We have found time and again that air infiltration, say a foot below the burner, in the front of the combustion chamber will prove only detrimental, frequently reducing the combustion temperature to such an extent that incomplete combustion takes place with an excess of oxygen.

All attempts to counteract infiltration of false air, through passing through the front of the boiler, by cutting down the primary air usually proved ineffective. One advantage in working with primary air only is that the operation is not so much dependent on the stack draft or the quantity of gas passed at a given time, the primary air being, of course, to a large extent dependent on the latter.

There is no doubt that any kind of burner, whether it takes advantage of primary mixing of gas and air or not, can be regulated in such a manner that it gives complete combustion with a very low excess of air; but such regulation requires constant attention and in ordinary practice is quite beyond the capacity of the usual boiler house crew.

In this respect a test which was made at one of the Eastern steel works, may be of interest. Two boilers, one equipped with a burner working with secondary air only, the other with a burner working with primary air only, were tested side by side after they had been adjusted in such a manner that both boilers showed 22% CO_2, 1.0% oxygen and no CO in the combustion chamber. The three successive tests taken on both boilers under identical conditions showed that the boiler utilizing primary air only changed the combustion of the gas in the combustion chamber due to change of gas pressure, to a lower CO_2 of 19%, without any unburnt CO; whilst the boiler working with secondary air went down as low as 17% CO_2 with 6% unburnt CO. This appears to be an excellent illustration of the effect of varying boiler draft on the condition of the combustion chamber.

In general the suction in the combustion chamber should be arranged to meet the average gas pressure. It is advisable to arrange for a higher suction in the combustion chamber than usually considered advisable for coal firing. I have found that as a rule a suction of 0.20 in. of water pressure takes care of all fluctuations of gas pressure within reason.

Mr. L. C. Frohrieb:† It has occurred to me in all this discussion that it would be preferable to arrange some kind of apparatus that would control the amount of air admitted to the burner in direct proportion to the gas pressure. This has been done, using natural gas, and I do not see why that should not be done with blast furnace gas. Of course, there is considerable difference in the heat value of the gas itself, but if the quantity of air admitted is well regulated relative to the gas pressure, the results would be more uniform than just depending on the aspirating effect of the variable gas pressure.

A much better method, however, is to design the gas main, mixers, burners, furnaces, baffles, and stacks for a predetermined low gas pressure, and then maintain the gas pressure at this predetermined pressure with suitable gasometers and holders.

Mr. John Glass:* This is a little out of my line. I came here to learn something about burning of blast furnace gas. I am very much interested in the arrangement of the burners used in connection with boilers.

My experience has all been with burning natural gas in connection with steam boilers, and it looks to me as though you followed along very close to the same lines that we do in burning natural gas, except of course in taking care of the greater volume due to handling a low B.t.u. gas.

Mr. F. H. Wilcox:* What I have to contribute to the discussion is probably more of historic interest and of interest in regard to ordinary blast furnace boiler practice, than of value in

†Secretary, Federal Engineering Company, House Building, Pittsburgh.

*Chief Engineer, Carnegie Natural Gas Company, Waynesburg.

*Bureau of Mines, Pittsburgh.

regard to the advancement in boiler practice described by Mr. Leahy and Mr. Siebert. Some six years ago two other men and myself undertook about 50 boiler tests at a blast furnace plant in this district. About one-third were on boilers using clean gas, the remaining on boilers using rough or dirty gas. The boilers were 250 h.p. Babcock & Wilcox, each equipped with two Kennedy type goose-neck burners with a gas inlet area of about 185 sq. in. Up to the time we started the tests, the boilers had been under the supervision of the plant master mechanic and, under him, a general boiler house foreman. The openings about the burners, into the combustion chamber, were closed up with sheet iron fitted closely about the burner castings, which you can realize, allowed insufficient air to enter with the gas for complete combustion. It also developed that the boiler settings were pretty full of leaks. The first four or five tests were made with the boilers as they stood and described above, and we got remarkably consistent results. They were consistently bad, however, running from 48 to 54 percent heat efficiency, with losses due to incomplete combustion as high as 20 percent. The obvious step was to remove the sheet iron from about the burner noses. This we did, and from then on we struggled to obtain consistently high efficiency. Of course another obvious step that we took was to plug with fire clay, asbestos rope, and cement, all the leaks in the boiler settings that we could locate by means of an oil torch.

Not to go into details, the net result of our work with uncleaned gas proved to be that we could not obtain consistently high efficiency. That is to say, we at times obtained as high as 70 percent efficiency on one 8 hour test, but returning the next day for a check test on the same boiler, we would find it impossible to duplicate the result. Compared with the detailed and painstaking measurements of temperature and analyses in the combustion chamber, the checking up of drafts in various places throughout the setting control of gas pressure, etc., now followed in good boiler tests, our work was admittedly crude. Our average efficiency of boiler and burner using rough gas averaged about 58 percent, using the methods of control we had at our disposal, i. e., gas analyses of furnace and flue gas, draft at the stack, and gas pressure in the burner box. This average was

made up, however, of results varying from 50 percent to 70 percent, in one instance, heat efficiency. The gas pressure at the burner box was about 1.8 in. of water when all furnaces were running normally. Checks on the furnace, casts, slips, stiff or irregular work introduced a variation during each hour that made the range run from perhaps 0.6 to 2.2 in. of water the usual range being between 1.5 and 2.0 in. As far as I can determine, this variation in the pressure was one cause of our lack of success in obtaining consistent results, the other being the inherent difficulties of getting a good mixture of air and gas with the ordinary burner employed, the flame almost always extending into the second pass. It was virtually impossible to get incomplete combustion without a large excess of air. With an excess of air that would be called normal in some of the present practice, we had 5 or 6 percent loss due to incomplete combustion.

The point I have in mind in relating this experience is that our experience is probably quite comparable to what most blast furnace superintendents and master mechanics have experienced in attempting to better the efficiency and load of their boiler plant. Except at large plants, neither the time nor testing equipment is available to place the boiler plant on a working basis comparable to that described by Mr. Leahy. I certainly think that the work and results brought out by Messrs. Leahy, Siebert and Cronemeyer are creditable and that such work more than repays the money and time spent in making experiments with burners, tests, and in supervision or control work to keep the plant up to the mark through working conditions developed as best by the experimental work and tests. Especially, it seems to me, is the work of Mr. Seibert important in determining the characteristics of typical burners, as from our work it appeared that in a suitable burner for blast furnace gas laid the most promise of a highly efficient boiler. It is virtually impossible, as far as my observation goes, for the average blast furnace boiler house force, to control combustion with the ordinary type of burner, and in addition regulate the draft and keep the settings in fair shape. Mr. Leahy is to be congratulated on having an exceptionally good boiler house foreman to look after the operation of the practice he has developed at the National Works, and in saying this I

do not detract in the least from his development of the means employed to obtain the results.

It is surprising to see how many boiler plants at blast furnaces are firing coal, even boiler plants that are not supplying steam to steel works. In the last two years I have had an opportunity to observe this circumstance in a casual way all over the iron-making districts of the country. The circumstance is not in any way an indictment of those in charge of furnace plants, because I believe, and hope I have shown, that it is a hard thing to burn blast furnace gas under boilers efficiently. It takes time that is only rarely at the disposal of those in charge.

In regard to the aspirating type of burner under discussion this evening, I am not prepared to enter into discussion of its mechanism. It may be of interest to you, however, to know that I have seen this type of burner in operation at several plants, and it is saving a very considerable amount of coal firing, or eliminating it entirely, and those superintendents who have installed it are strong in their appreciation of its practical results. Used with or without balanced draft, it is unquestionably a very marked advance over other types of burners in common use.

A point not brought out in the discussion is the advantages of the use of clean gas at the boilers. In the tests we ran we found, that with a boiler in use for, say, three or four weeks on clean gas with a B.t.u. content of 100, as contrasted with a boiler in use for a similar length of time on dirty gas with a B.t.u. content of 108; the boiler on clean gas actually absorbed more of the 100 available B.t.u., on a percentage basis, than did the boiler on dirty gas of the 108 available B.t.u. The dirty gas boiler transformed into steam 62.6 B.t.u., while the clean gas boiler transformed into steam 64 B.t.u. That is a percentage of heat efficiency of 58 and 64 percent, respectively. We had trouble in burning the clean gas in the ordinary boiler setting, but as the quality and quantity were remarkably constant, after we approximated the best conditions for combustion, we could duplicate the results more consistently than with dirty gas. It is apparent that the above amounts of heat absorbed per cubic foot of rough and clean gas give a small margin for the clean gas, and after the labor and materials in repairs and maintenance,

operating charges, and interest on investment of the gas washing plant had been charged on the debit side of the balance, it was found that there was a net loss of about 4 cents per ton iron in using clean gas at the boilers.

MR. J. A. KNESCHE:* I will confine my remarks to blast furnace gas fired boilers and to subjects related thereto.

The time was, and not so far back as not to be within the memory of the older members of this Society, when little or no attention was paid to what we now regard as a most valuable by-product of the blast furnace, viz., blast furnace gas. In the last ten years or so we have realized with increasing force that this was a mistake and we have taken steps to obtain the largest possible results considered from an economic standpoint, from this once very inconvenient waste. In our march of progress in this special line, the completeness of heat utilization in boilers fired with blast furnace gas has frequently been a subject for speculation with engineers, we have records of hundreds of reliable boiler tests when coal was used as fuel, but practically speaking, have none whatever when blast furnace gas was so used.

It is easy to find the reason for this state of affairs. There are various boiler efficiencies, but the one I have in mind and the one which most engineers usually think of when the subject is mentioned, is the over-all efficiency showing the degree of heat utilization of the entire steam generating apparatus. This is

$$\frac{\textit{Heat absorbed by boiler per pound, or cu. ft., of gas.}}{\textit{Heat available per pound, or cu. ft., of gas.}}$$

Making a boiler test means among other things the exact determination of the two quantities shown in the above ratio. The quantity in the denominator is comparatively easy to obtain, while the one in the numerator is difficult to obtain, and in many blast furnace plants impossible to determine. The only reliable way we have of determining the exact volume of blast furnace gas used during a boiler test is by measuring the gas in large

*Steam Engineer and Engineer of Tests, National Tube Company, Wheeling, W. Va.

gas holders of the proper size and by means of meters, the latter either of the Venturi tube or the Pitot tube type. The use of gas holders for making the test is out of the question in practically all furnace plants; the insertion of a Venturi tube in the gas mains leading to the boilers in all proability would likewise not be undertaken in most plants because of the rather expensive construction of considerable lengths of gas and meter mains.

The Pitot tube instrument would no doubt give the easiest method of containing the volume of gas going to the boilers, but even this instrument should have a straight length of main of from six to ten times its diameter on its up-stream, and not less than two times its diameter on its down-stream side; this would mean a straight length of gas main going to the boilers without valve of tee-connection therein of at least from 45 to 60 ft. Since at most blast furnace plants the boiler houses are placed as close to the furnaces as possible, it is easy to see that even this method of determining the volume of gas going to the boilers could be used at only a few plants. The existence of these conditions is responsible probably in large measure for the fact that we have practically no records of boiler tests conducted on boilers fired with blast furnace gas, possessing the same degree of accuracy as our records of authentic boiler tests conducted on coal fired boilers; and it is this state of affairs that may lead to erroneous conclusions in regard to the steam generating departments of blast furnace plants.

An example of what appeared to me to be an erroneous conclusion came to my notice some time ago. An engineer of standing, quoting the experiments conducted by a steam engineer with "Dutch-Oven" type furnaces on blast furnace gas fired boilers, stated that two blast furnaces with a combined production of 950 tons per 24 hours and a coke consumption of 2100 lb. per ton of iron produced sufficient gas to generate "well over 10 000 boiler h.p." I questioned the probability of this and suggested that either their feedwater measuring device, if such they used, must have been grossly incorrect, or they must have been burning coal under the boilers in addition to the blast furnace gas fired, or perhaps both. In reply to this I was informed that a Venturi meter measured the feedwater and that a test estab-

lished the correctness of the Venturi meter; further, that no coal whatever was fired under the boilers. The reply also stated that with a production of 950 tons, a coke and limestone rate of 2100 lb. and 1100 lb. respectively, a carbon content of 3.5% in the iron with the gas analysis as given ($CO_2 = 13\%$; $CO = 25\%$; $H_2 = 3.5\%$ $N = 58.5\%$.) and a boiler efficiency of 78% would make entirely feasible the generation of 10 000 h.p. for an entire month.

The above reply assumed further that the coke contained 12% of ash, that the gas production was 150 000 cu. ft. per ton or iron and that the gas requirement was 1 440 000 cu. ft. per hour for heating the blast; it omitted, however, to allow for losses around bells and bleeder stacks. While such wastes are not supposed to occur, there are probably no furnaces in continuous operation where it is possible to prevent such losses. These losses are estimated variously from 2 to 5% or more of the total gas produced. The reply omitted further to consider the moisture in coke and the loss of carbon in flue dust. The sum of these omissions would no doubt make the blast furnace gas available for the boilers less than 150 000 cu. ft. by perhaps from 4 to 8%.

If these omitted items had been taken into consideration, it would have been necessary in order to generate the 10 000 h.p. only, instead of the "well over 10 000" as stated first, to assume a boiler efficiency of between 83 and 84%. I feel quite sure that most engineers would seriously doubt the correctness of such a boiler efficiency. Prof. Jacobus in a test of a 325 h.p. water tube boiler fired with blast furnace gas found its efficiency to be 61%, based upon the carbon ingredients of the blast furnace gas and of the boiler stack gases. From this it does not follow by any means that 61% is a standard figure, but the difference between the two efficiencies is so great as to justify doubt in the higher figure.

Consideration must also be given to the fact that the average efficiency of all boilers in an entire boiler plant over an entire month is always lower than that of one boiler over the average testing period. This is easily understood when it is considered that it is practically impossible to give for an entire month continuously the same care, unwearied attention and perfect adjust-

ment to every detail of an entire boiler plant of over 10 000 h.p. as can be given to just one boiler undergoing only a 10 or 12 hour test. This must be carefully considered when comparing the 83 or 84% efficiency with the one of Prof. Jacobus. In numerous boiler tests made by the writer he always found the single boiler tested showing a higher efficiency of from 7 to 10%, and even over, than the monthly figure found for all the boilers in the entire boiler house. In justice to the argument it should also be stated that the test of Prof. Jacobus referred to was made in 1888, at a time when boiler pressures of 100 lb. were considered high; the average gage pressure for the test in question (Prof. Jacobus) was 61.3 lb. My only reason for citing it is that I know of no later test conducted by any well known engineer on a boiler fired with blast furnace gas.

Owing to the fact that not so long ago blast furnace gas was wasted, we have been somewhat slow in applying to its proper combustion in boiler furnaces the same degree of care and attention which we have generally given to coal fired boilers. But we are moving away from this practice and are beginning to take this problem seriously. In the flue gas analysis we have a very reliable guide of the completeness of the combustion in the boiler furnace. The main endeavor must always be to obtain a high percentage of CO_2, a low percentage of O and no free CO. In many tests made on boilers fired with blast furnace gas the writer has always obtained the best results by regulating the draft so as not to obtain a water pressure of much more than 0.02 in. in the boiler furnace. To be able to regulate the draft so closely the damper in the boiler stack becomes an obsolute necessity, and if the gas pressure is very irregular, proper damper manipulation becomes quite an art. The temperature of the stack gases must be kept as low as it is possible to keep them with proper bafflings free from holes. In a well-managed boiler house where the boilers are fired with blast furnace gas the average monthly analysis for the entire boiler plant should be about as follows:

CO_2 .....20% or more;
O ..... 2% or less;
CO .....No trace

Stack gas temperatures at full rating = 600° F. or less.

A truly average analysis as given above will nearly in every case give a boiler efficiency of 70% or even more.

Recently the writer conducted some tests on boilers fired with blast furnace gas. The boilers are the standard Stirling boilers rated at 282 h.p. and have two lower drums. There are twelve of these boilers in the boiler house in question connected so as to form six batteries of two boilers each. Two boilers had vertically descending baffle arches built in at the ends of the regular furnace arches. The baffle arches were built of brick about five feet back from the gas burners and they descended toward the center of the arch a distance of 23 inches from the inside of the furnace arch. Before putting in these baffle arches it had been our opinion that the combustion in these boiler furnaces could be improved and to test this idea was the purpose of putting in the baffle arches. The tests mentioned before were to determine whether placing the baffle arches in the furnace had really improved matters, and if so, to determine if possible, to what extent.

For making the test we had available at the boiler house the regular Venturi meter installed here and a General Electric Steam Meter measuring the surplus steam which is sent from this boiler house to other departments. The Venturi meter measured all the feed water for all the boilers in operation. By closing the proper valves on the steam mains we separated the two boilers fitted with the baffle arches from the other boilers and measured the steam generated with the steam meter already mentioned. We were thus enabled to determine the steam generated in both groups of boilers, i. e., the steam generated in the boilers whose furnaces were not fitted with baffle arches, of which there were seven in operation, (this group of boilers was designated as "Group *A*"); and further, as already stated we were enabled through the steam meter to determine the steam generated by the two boilers fitted with the baffle arches; (these last mentioned boilers were designated as "Group *B*"). In separating the steam generated by these two groups of boilers no blanks were inserted in the steam mains, but instead the valves were merely closed; these valves were reported as holding tight. Neither did the Venturi meter receive a special calibration prior

to the test. The gas admission valves to these boilers are all alike, fitted with the same opening regulating device and they were set so as to admit the same volume of gas to each of the nine boilers in operation. The tubes of all the boilers at this plant are cleaned regularly in turn and as nearly as could be judged they were all in the same condition with reference to incrustating matter.

After the baffle arches had been built in, we anticipated that the heat in the boiler furnaces might become rather intense and as a precaution we took out the grate bars. Our precaution was justified, for not long after the gas had been lighted the interior of the furnace became almost incandescent in glow and this heat would surely have melted the grate bars had they been in place. The whole of the combustion chamber was a mass of turbulent and partially reverberating flames and the heat within it was so intense that the inside of the unlined ash pit and firing doors remained in a state of bright red heat during the entire duration of the test.

Readings of the various instruments and appliances for the determination of the feedwater evaporation and for the steam flow were taken every fifteen minutes. Flue gas analyses were made alternately on the two boilers. No determinations of the moisture in the steam were made because we knew from experience that in ordinary operation neither moisture nor superheat is present in the steam from this boiler plant.

During the test the ash pit doors and the firing doors were sealed with fire clay; the air necessary for the combustion entered the combustion chamber through a large annular air-port surrounding each gas burner. The nozzle opening of each burner was 3-11/16 inch, and the gas entered each boiler through ten of these burners.

DATA OF TEST

Duration	5 hrs. 41 min.
Total Feedwater to Groups *A* and *B*	56 300 gal.
Avg. Steam per Hour from Group *B*	19 550 lbs.
Avg. Gas Pressure	3.51 inch H_2O
Avg. Draft Pressure	.03 inch H_2O
Avg. Steam Gage Pressure, Group *A*	156 lbs.
Avg. Steam Gage Pressure, Group *B*	133 lbs.
Avg. Feedwater Temperature	194° F.

FLUE GAS ANALYSES (GROUP B)

	Boiler No. 11	Boiler No. 12
Avg. CO_2	14.35%	11.30%
Avg. CO	Zero	Zero
Avg. O	11.30%	9.35%
Avg. Stack Temperature	714° F.	747° F.

The above analyses do not represent at all the absolutely perfect condition existing in the combustion chambers of these two boilers. The heat under the arches was so intense and the mixing conditions so perfect that no combustible gas could pass under them without being consumed. This fact is demonstrated by the entire absence of any CO in the above analyses. The side and rear walls of the boiler setting were practically new at the time of making the above test, but the front wall underneath a cast iron boiler front (and therefore invisible unless inspected from within) contained many holes and crevasses through which the air must have poured in in large volumes and thus diluted the flue gases. Of this we have convincing evidence in the comparitively low percentages of CO_2 and the very high percentages of O in the above analyses.

The evaporation of 56 300 gallons of water represents under the conditions stated

$$\frac{\frac{56\,300}{5.73} \times 8.0293 \times 1.067}{34.5} = 2439.9 \text{ boiler h.p.,}$$

while the 19 550 lb. of steam per hour represent under the conditions of generation

$$19\,550 \div \frac{34.5}{1.065} = 603.5 \text{ boiler h.p.}$$

From the above the boilers of Group A were developing

$$\frac{2439.9 - 603.5}{7 \times 282} = 93.08\%$$

of their rated capacity, while the boilers of Group B (boilers fitted with baffle arches) developed

$$\frac{603.5}{2 \times 282} = 106.99\%.$$

From these figures it appears that the boilers of the last mentioned group seemed to do better by

$$106.99 - 93.08 = 13.91\%$$

of their rated capacity.

AIR DRYING FOR BLAST FURNACES*

By Leon Cammen†

State of the Art: The methods of drying air for use in blast furnaces may be divided into two classes: Cryogenic (cold-using) and chemical.

The method of drying air by cold may again be divided into two classes, those using dry cold (Gayley, Roberts and Gayley, Haslam, L. Sterne & Co.), and the methods resorting to the use of cooling liquids in direct contact with air.

The dry cold methods have been found efficient, but require an expensive installation.

A good representative of the wet cold method is the process proposed by Bruce Walter and described in *The Iron Age,* January, 1912. It is apparently more expensive in operation, but for the same output requires a less expensive plant than the Gayley process.

The chemical processes are nearly all based on the affinity of dry calcium chloride for moisture, and vary mainly in the methods of effecting the contact between the air and the salt, cooling of the salt and its regeneration.

In the Fryer process air is passed over broken pieces of calcium chloride which latter is regenerated in special boilers.

In the Cremer process a desiccating chamber is used, in which regeneration of the calicum chloride may be carried on on the spot; on the other hand, the Cremer process does not provide for a very intimate contact between the air and the salt.

The Elsner process differs from the two preceding ones mainly through a better mechanical arrangement providing for the movement of the salts, dry and regenerated, in the apparatus.

The various Harbord processes use, instead of plane calcium chloride, inert substances impregnated with hygroscopic salts at very high temperatures.

*Contributed to the Proceedings of the Society.
†Engineer, 29 West 39th St., New York.

Finally, in the process of Daubine and Roy air is brought into contact with dry calcium chloride cooled by a flow of water through pipes located in the lower part of the pile of salt. After the salt has absorbed so much moisture that its efficiency as a drying agent begins to be impaired, it is regenerated by gradually raising to a temperature between 175 and 235 deg. Cent.

The great disadvantage of all chemical processes lies in the high cost of running the plant and its large heat consumption (7500 calories per kilogram of water extracted, for regenerating the chlorides from the hydrants, to which must be added the power consumed by the pumps, fans, etc.)

Present Process: Principles: The present process effects the absorption of the moisture from the air not by reducing the temperature of the air to the desired point of saturation, but by bringing the air, under special conditions, in contact with a proper hygroscopic body. In this particular the process approaches more closely the class of process of drying air by chemical reaction. It differs however, from them in that it uses not dry calcium chloride, but a properly concentrated solution of this or a similar salt maintained at a proper low temperature.

From the process of Bruce Walter, who also uses a brine at low temperature, the present process differs in the following way: In the Walter process the reduction of the moisture in the air is due exclusively to the lowering of the temperature, and hence it is impossible to obtain air containing moisture below the point of saturation for the given temperature. In fact, brine is used by Walter only because it is the cheapest means to use under the circumstances, but apart from that the drying could be just as easily carried on with cold mercury as with cold brine. In the present process the use of brine is absolutely essential. On the other hand, the temperature at which the brine is used, is a matter of secondary importance determined, not by the temperature of air as in the Walter process, but mainly by the degree of concentration of the brine.

As will be shown below, the *present process permits of obtaining unsaturated air,* and in fact it is quite likely that it will produce such air when applied on a commercial scale.

Physical Facts on Which the Present Process is Based: The present process is based on the fact that the drying action of a solution of calcium chloride depends on two things, the degree of concentration and the temperature at which the liquid is maintained. Thus, a 30 percent solution neither gains nor loses water when in contact with air. The same solution at 16 deg. Fahr. takes in moisture with great avidity.

The Process: The process involves therefore the use of the following cycle of operations. In the first place air is passed through a highly concentrated solution of calcium chloride maintained at a proper low temperature, and is there freed of such moisture as it may contain.

The cold brine moves in countercurrent to the air, and after meeting it proceeds to an evaporator where it is brought back to the initial degree of concentration. It is then sent along a series of cooling coils until it reaches the desired low temperature, and is ready to meet the incoming air again.

On its way from the evaporator to the concentrator the warm brine is first cooled by a stream of water, and then flows in countercurrent to the cold brine going to the evaporator. The advantages of this arrangement, not novel in itself of course, are particularly great with this process, as will be shown later.

An essential feature of the present process is the fact that in the evaporator only a concentration of the brine, and not drying of the salt, is carried on. This results in the fact that only comparatively low temperatures have to be used.

As stated above, the whole process is based on the fact that the power of absorption of moisture of calcium chloride brine of high concentration is tremendously increased by its low temperature: 30 percent brine will absorb water with great avidity at 16 deg. Fahr., but reaches a state of equilibrium at 60 deg. Hence, it will give most of the water absorbed when raised to, say, 100 deg. Fahr., provided the air over the surface of the warm brine is not allowed to reach a state of saturation. Of course, actually a higher temperature would have to be used, as evaporation at 100 deg. would be far too slow. Still, this fact materially affects the heat consumption.

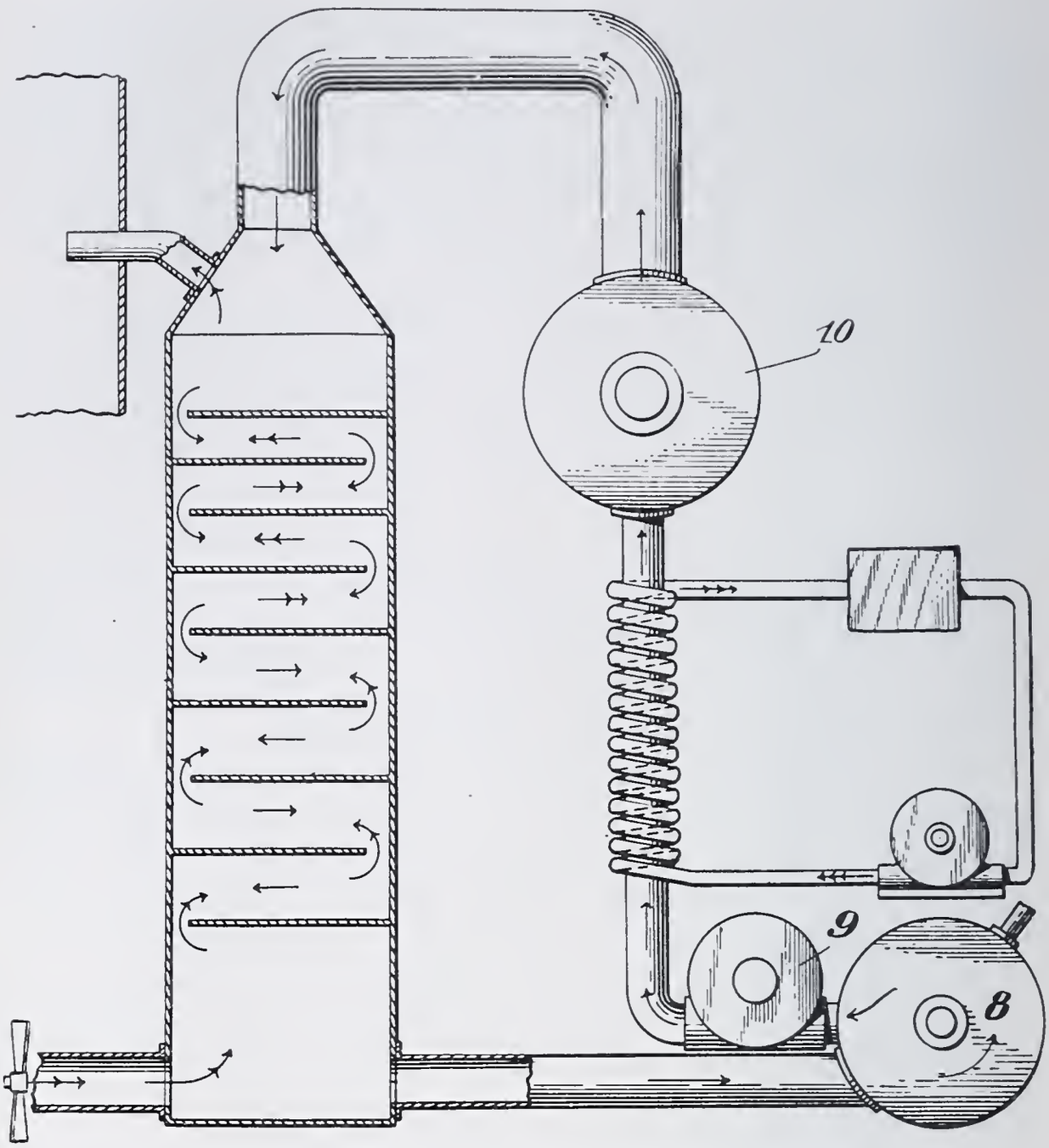

Fig. 1. Blast Furnace Air-Drying System.
Single-headed arrows—Brine. Double-headed arrows—Air.
Triple-headed arrows—Cooling water.
No. 8, Evaporator. No. 9, Pump. No. 10, Cooling Plant.

Assume that the brine leaves the refrigerator at a temperature of 16 deg. Fahr. and a concentration of 40 percent. By the time it leaves contact with the incoming air, it has a temperature of say 25 deg. Fahr., and a concentration of 30 percent. It is important to notice in this connection that the incoming warm and moist air is first met by the comparatively warm brine. Now, brine at 25 deg. Fahr. and 30 percent concentration is still perfectly capable of taking out a large amount of moisture from air at say 80 deg. and a content of 7 grains of water per cubic

foot. It is a well-known fact that the main difficulty in air drying is the extraction of the last one or two grains of water. In the present process the comparatively dry and by now fairly cool air will, in its last stage of motion, pass through a layer of 40 percent brine at 16 deg. Fahr., which is intensely hygroscopic and able to take out all the moisture that is desirable.

Hence the liquid is utilized in the most efficient manner both as to the distribution of temperatures and distribution of concentrations. In fact, not only can the present process be carried out in a single continuous operation, but such is its economy that, contrary to the usual practice with air drying processes, the introduction of a second stage would not bring about any visible advantages.

The liquid then leaves contact with the air at a concentration of 30 percent and a temperature of 25 to 30 deg. It goes to the concentrator where it has to be raised to say 180 deg., but the actual range of temperature of heating is considerably less with the proper use of the countercurrent principle of operation.

The same applies to the matter of cooling. Assume that the plant is designed to take care of 60 000 cu. ft. of air per minute taken in at 90 deg. Fahr. with a content of moisture of 8 grains per cubic foot. It is required to reduce the moisture to 1.5 grains per cubic foot, or to eliminate 6.5 grains per cubic foot, which, roughly, means 60 lb. of water per minute. In the Gayley process the temperature of the entire volume of air would have to be reduced from 90 deg. to about 16 deg. Fahr., which involves a very large expenditure of heat. In the present process all that is done is 60 lb. of water are added to the brine, reducing its concentration from 40 to 30 percent, which, roughly speaking, resolves itself into a problem of handling 600 lb. of brine per minute.

The machinery has therefore to take care of the following operations: The pumps have to handle a circulation of brine of 600 lb. per minute, and about 1000 lb. of water, very small pumps indeed. The evaporator has to be able to take care of 60 lb. of water per minute, which means roughly what is known as a 30 horse-power boiler—again a very small piece of machinery with a small consumption of fuel. The refrigerator has to reduce 600 lb. of brine per minute from about 60 deg. to 16 deg., a very small

amount as compared with what is used now in similar processes. The auxiliary machinery involves the cooling tower, piping and exhaust fan to take care of the vapor formed in the concentrator.

While the inventor is not prepared as yet to submit any estimate of the cost of the machinery, he believes that it would not exceed one-quarter of the cost of the machinery required for the dry-cold process.

A very important element is the fact that the attendance required by the process is very small. The process is continuous, and operates with very low temperatures in the heat end and moderate temperatures at the cold end.

The following data as to the main machinery are based on the assumption that 60 000 cu. ft. of air are handled per minute; that the air enters at a temperature of say 90 deg. Fahr. and with a moisture of 8 grains per cu. ft., and has to be dried to a content of 1.5 grains per cu. ft. (It is, however, possible to dry the air to about 0.8 grains per cu. ft. without materially increasing the size or cost of the apparatus).

The evaporator has to handle 600 lb. of brine per minute, and to raise its concentration from 30 percent to 40 percent; at 30 percent brine begins to give off water at about 65 deg. Fahr. Capacity of the evaporator is 60 lb. of water per minute, or what is known as a 30 horse-power boiler.

The pump handles 600 lb. of brine per minute.

The cooling plant receives the brine from the evaporator, previously pre-cooled by the water coils shown below *10*, in Fig. 1, to a temperature of about 60 deg. Fahr. This brine, 600 lb. per minute, has to be cooled down to 16 deg. Fahr. The refrigerating capacity is what is known as 100 tons, and it is proposed to effect the cooling in two stages. Cost of the refrigerating plant, according to a rough estimate by a refrigerating machine company, is about $8000.

IMPORTANT FEATURES RELATING TO THE DESIGN AND IMPROVEMENT OF CITY STREETS

By N. S. Sprague*

There is perhaps no other line of engineering work which is subject to such close scrutiny by the public and which has such an important effect upon the development, prosperity, health, comfort and general convenience of a community than the improvement and construction of streets and roads. Important as the subject may be, it is a well known fact that the construction of streets and roads in many instances is entrusted to officials who are without knowledge of the art and engineering ability or training.

In many of the smaller cities and towns, the selection of the type of pavement for a street is vested in the legislative body and the laws of some states give the abutting property owners the right to dictate the character of pavement. The question of location, width and grade of a highway is frequently determined, by those charged with the responsibility, upon considerations of expediency rather than upon the engineering principles which should govern these decisions. This situation is well understood when you consider that prior to a decade ago, streets and roads were built for horse drawn vehicles and the design of streets and roads to meet the requirements of such traffic was pretty well standardized and generally known. Moreover there being less technical skill and knowledge of the art required, accounted in some degree for the general public participation in these matters, and therefore the control over them was delegated to unskilled authority.

Another reason, which is basic, is the fact that public streets and roads are paid for by the people and under the theory of democracy the people are supreme and their authorized representatives are bound by fidelity to their trust to legislate in ac-

*Chief Engineer, Bureau of Engineering, D. P. W., City of Pittsburgh.

cordance with the expressed wish of their constituents even to the extent that such action may be in violation of some well recognized theory or principle of engineering or economics. The design and construction of city streets and highways is a public matter and the public official who has charge of such work, should never lose sight of the fact that his duty requires him to acknowledge and accept the decree as may be expressed by the properly constituted authorities representing the public. It is likewise his duty to the public to clearly inform them on all engineering matters at issue, giving them the benefit of his knowledge and experience, so that, when action is taken, they will be acquainted with all the facts and conditions relating to the matter under consideration.

There devolves upon the engineer in public employ a greater duty to his profession than one who is in private employ, for the former should have the courage, ability and character to so convince and persuade the public upon engineering matters that his ideas will prevail. This task is far less severe where the authority is vested in those who have a more intimate knowledge of their duties of office.

With the general use of the motor car and truck it was very quickly found that the former practice of paving and road building was unsuited to the new means of travel. One of the problems of the city prior to the advent of the motor vehicle, with respect to street pavements was to provide a surface which would furnish a good foot-hold for horses, without much regard for obtaining a smooth surface. The transition in the type of vehicles during the last decade has presented a problem in street design which is both expensive and difficult of solution.

Where formerly the problem of street design, with respect to the requirements of vehicles was limited to one class; (namely, horse-drawn) we now have a condition where the street surfaces must conform to the needs of both horse-drawn and motor vehicles, the former demanding a relatively rough surface and the latter a smooth one. If there was positive evidence that the horse as a motive power would ultimately be abandoned and motor vehicles used exclusively, a definite standard of street design and paving could be adopted, but during this transition

period, provision must be made for both types of vehicles. Thus many pavements which are laid at present will undoubtedly have to be replaced in the future in case of the universal use of motor vehicles.

The general use of the motor car and truck has made necessary the adoption and use of pavements of a distinctly different character, both within and outside of large centers of population, than what was formerly considered adequate to meet the requirements of traffic. The elements of speed and load of vehicles are new factors in highway design, which have had an important bearing upon the character of foundation and street surface, and have controlled in a great measure the present design of pavements. This is more especially true of country roads than city streets, although in some cities where macadam pavements were used in the residential districts and on boulevards and main arteries it applies with equal force. The excessive cost of maintenance, the unsatisfactory condition of the street surface and the dust nuisance, have made it mandatory upon such communities to replace or modify the macadam surface with a more durable material which will withstand present day traffic and remove the objections to the former types of pavement.

There are certain features of design common to both city streets and country roads, but in the main they are essentially different, although the density and volume of traffic may be as great in one case as the other. The chief element operating to prevent the use, in many instances, of cheaper pavements on city streets, is the presence of under-ground and surface structures providing utilities which require frequent disturbance of the street surface, thus imposing upon the community an excessive cost for maintenance. It is therefore apparent that the design of city streets must include and take into consideration a number of conditions which may properly be neglected in the design of country roads, boulevards and park-ways.

LAWS RELATING TO STREET IMPROVEMENTS

The location, opening, establishment of grade, grading, paving and curbing, widening, extending, re-establishment of grade and vacation of public streets in the City of Pittsburgh is gov-

erned by the Pennsylvania laws, under the provisions of which the City, through proper councilmanic action, may exercise its right whenever it deems such action necessary. With a view of correcting the former unsatisfactory manner of locating streets in plans of lots and to insure their co-ordination with adjoining or proposed streets, an Act was approved June 10th, 1911, creating a City Planning Department. Under the provisions of Section 5 of this Act, the Planning Commission is given authority over the location of all highways intended for dedication to public use or for the use of owners or purchasers of lots fronting thereon. The approval of the Commission is mandatory before the plan can be accepted by the City or recorded.

There are two general laws relating to the opening and improvement of highways in this city. One permits the initiative to be taken by the abutting property owners and the other, which is an amendment to the original law, gives the city, through Council, the right to open or improve a highway without the consent of the abutting property owners.

The original Act of 1891, P. L. 75, as amended, provides *inter-alia* that municipal corporations have the authority to open and improve highways upon a petition of a majority of the property owners in interest and number abutting on the line of the proposed improvement. It was found impossible, under the provisions of this Act, to either open or improve a street, where a majority of the frontage abutting thereon was owned by a single individual, unless in favor of the improvement. Conversely, the owner of a majority of frontage favoring the improvement could not proceed without the assent of a majority of the owners. Under these limitations of the Act, it frequently developed that the opening and improvement of streets were prevented for a number of years, until 1895, when further amendments to the Act of 1891 were made which gave the City the authority to open and improve streets without the consent of the property owners.

The purpose of this act was to overcome the difficulties which existed under the previous legislation. The authority granted under the Act of 1895 should be used with discretion and only when the public interest in a proposed improvement is paramount to the immediate local interest. The Act of 1895, if used indis-

criminately, would in many cases result in hardship upon small property owners and would possibly lead to the loss of their holdings due to inability to meet the assessments levied. For these reasons the policy of the City with respect to this matter is to secure wherever possible a petition properly executed by the abutting property owners.

A petition having been filed for the opening of a new street, a city ordinance is prepared, authorizing the opening of the highway between the limits described therein and providing for the cost, damages and expenses caused thereby and the benefits to pay the same to be assessed against and collected from the properties benefited thereby, as provided under the Act. Upon the passage of such an ordinance, a plan is prepared showing the location of the street and the extent and area of the several properties which are taken by the opening, for use of the Board of Viewers.

The Act further requires the posting of hand bills along the line of the proposed improvement, notifying the owners of the passage of the ordinance, and the interested owners are given sixty days from the date of approval to file objections to the validity of the petition. Hence the opening and improvement of a highway cannot be effected until after the expiration of the sixty day period. Under the law, the viewers are required to advertise for a period of ten days of their intention to meet upon and view the property or improvement and hold hearings and prepare a schedule of damages and benefits. The report of the findings of the viewers is filed with the Court and thirty days are allowed in which interested property owners may take exceptions thereto and after the expiration of thirty days the report is confirmed by the Courts and all rights of property owners to take exception to the viewers report are waived. The same procedure is followed with respect to the grading, paving and curbing of a highway upon petition of the property owners unless the original petition call for both the opening and the improvement. It is therefore apparent that under the provisions of this law several months are required for the enactment of the necessary legislation for the opening and improvement of a public highway.

Under the Act of 1895, however, the time required for the enactment of the proper legislation is considerably less as only thirty days are required under this law for the passage of an ordinance. As an additional safe-guard however, the passage of such an ordinance requires a three-fourths vote of the total membership of Council and also the advertisement in the local newspapers of the ordinance once a week for three consecutive weeks, prior to taking final action thereon.

Ordinances for highway improvements must contain an estimate of the total cost, which must be determined in advance of the viewers' report. Thus it is incumbent upon the city to estimate the probable damages and benefits arising from the proposed improvement. A more rational and logical method it seems to the writer would consist of an amendment to the present law, which would provide, in the case of physical improvements, for the viewers' report to be filed in advance of doing the work, which would establish beyond any doubt and make more certain the actual cost of said improvement prior to its inauguration.

Petitions for the vacation of a public highway come under the Act of February 27th, 1849, P. L. 80. Section 3 of this Act provides:

"That whenever any highway, street, court or alley shall be vacated, or hath been vacated, by authority of law, the adjoining owner or owners shall be authorized to reclaim the same, to the center thereof, unless the ground was originally taken in unequal proportions from the then owners thereof, and in such case the adjoining owners shall reclaim, in the proportion contributed by such owners, or by those under whom they shall have derived their titles."

The provisions of the Act referred to above do not preclude the municipality from securing compensation for the vacation of a street.

LAWS RELATING TO ASSESSMENT

The Act of May 16, 1891, P. L. 75, relating to the laying out, opening, widening, improving streets, etc., also prescribes the manner in which assessments for benefits and damages to property shall be determined. There is no prescribed rule for ascer-

taining what the amount shall be, based upon a unit of frontage or any other method, but the entire question is left to the discretion of the viewers to make assessments upon the properties which in their judgment are peculiarly benefited by the improvement. The law relating to assessments does not make it mandatory upon the parties of interest to have viewers appointed by the court for the purpose of determining the assessment of damages and benefits and these questions may be agreed upon between the city and the owners of the property affected by the improvement. This latitude given under the Act is not frequently used except in relatively small and insignificant transactions. The property which is subject to assessment and damage is limited to that which abuts on the line of the improvement and included within the limitations of the ordinance defining the extent of same. Under the limitations of the law relating to assessments, this community loses a large amount of revenue which could rightfully be assessed against properties which are unquestionably benefited by many public improvements but which do not abut upon the line thereof.

There is great variety in the method of distributing the cost of street improvements in different states and it is a subject concerning which there has been much discussion. Insofar as the writer is informed, there has been but little information of recent date published in technical journals bearing upon this subject. In the year 1897, a very complete discussion of this subject appeared in the *Transactions* of the American Society of Civil Engineers, Vol. 38, by Mr. J. L. Van Ornum. This article recites briefly the method of making special assessments for street improvements in fifty cities throughout the United States, and there is about as much divergence in methods, as there is difference in local conditions in the various cities. Moreover there has been many changes since the publication of this article. The practice of making assessments against abutting properties on the line of an improvement, which appears to predominate, is the determination of the assessment upon the basis of property frontage along the line of the improvement. The laws relating to these special assessments appear to have been drawn to meet the requirements of local conditions principally with respect to the topography of the ground in which the cities are located. It appears that in

those cities, situated in relatively level territory, the entire cost of the improvement, with some few exceptions, is assessed against the abutting property.

The laws relating to this subject are of vital importance to a community, for, if they are drawn in the interest of the abutting property owner, they tend to retard the development of the street system on account of an excessive burden being placed upon the public at large. If however, the laws are so framed that all of the property which is benefited by the street improvement is assessed in proportion to the benefits which it receives, the burden which is then placed upon the public becomes relatively insignificant and is easily financed by the community.

In this city it would be impracticable to formulate a fixed standard based upon either frontage or area of lots, upon which to base an assessment charge for improvements, owing to the rough, uneven and broken character of the ground and for this reason it would seem that good judgment was exercised in leaving the matter to the discretion of the Board of Viewers.

Under the present laws relating to the making of special improvement assessments, all church property, railroad rights-of-way, cemeteries and charitable institutions are exempt from paying assessments, the amount of which is assumed by the city. The abutting property owners may be relieved of the cost of improvement of street intersections.

The fundamental theory governing the law of assessments, as heretofore stated, is based upon the special benefits to the abutting property and under this theory and with conditions as they obtain in this city, where streets are frequently built along hillsides and ravines, the assessment against such hillside and low-lying properties amounts to practically nothing, as the meausre of benefit is determined by the value of the abutting property prior and subsequent to the improvement. It is therefore obvious under this theory of assessment that where the abutting property had little or no value prior to the improvement, its value would not be increased in any perceptible measure by the improvement of a highway in front of same and therefore the pro rata share

of the cost of the improvement made adjacent to such properties must be borne by properties more favorably situated or else by the city at large.

DISTRICT ASSESSMENTS

In several large cities, the law relating to the assessment of benefits which accrue by the making of public improvements, provides for district assessments.

In a number of cities the laws relating to the distribution of assessments for street improvements permit the extension of the assessments beyond the precise limits of the improvement. This is the way it should be. In short, all property receiving a benefit in the way of appreciation should be assessed in accordance with the measure of benefit so derived.

As an example of the district assessment plan the practice of New York City is perhaps the most equitable of any with which the writer is familiar. The laws relating to the extent of the benefited district provide for an assessment area extending to lines midway between the adjoining streets, and all property included within the boundaries of such an area whether abutting on the line of the improvement or not are assessed for their pro rata share of the cost of such improvement. The law in Kansas City is not as clearly defined and greater latitude is given to those charged with making the assessments. In case of an ordinary street improvement, the assessments are usually levied against the abutting property, although the application of the law is different with respect to boulevards, where assessments are distributed over a predetermined area extending beyond the neat lines of the improvement. The laws relating to assessment for street improvements in the City of St. Louis are somewhat similar to those of New York City, except that one-third of the cost of the improvement is assessed against the property immediately abutting thereon and two-thirds of the cost is assessed pro rata against the benefited district.

Where the laws restrict the levying of assessments to the abutting property, great injustice may and frequently does result in part to the abutting owners and the community at large for the

reason that other property adjacent to the improvement is enhanced in value at the expense of others rather than the beneficiary.

EXCESS CONDEMNATION

The growth and development of cities and towns makes necessary from time to time the widening of existing main thoroughfares or the opening up of new streets to relieve congestion and to provide a more direct route, or for other reasons. The properties affected by such improvements have usually been sub-divided and improved prior to the initiation of the proposed improvement. The taking for street purposes frequently destroys a large part, and in some cases in its entirety, the value of the property. This is due to the fact that the remnants remaining, after the necessary taking has been made, are too small or are so situated as to be of no practical value. Excess condemnation for street improvements may be briefly defined as the taking by the municipality, within reasonable limitations, of more property than what is actually needed for the proposed improvement, with the idea of a re-division of the excess and the sale of same either prior to or after the completion of the proposed improvement. The right of excess condemnation has been enjoyed by European cities and also Canada for a number of years, but the first American city to adopt this principle was the City of Boston, which secured a bill from the legislature in the year 1904, known as the "Remnant Act," which embodied the principle of excess condemnation. The absence of authority for excess condemnation has been a great obstacle in the matter of making necessary and needed public improvements.

The State of Ohio, in 1904, Virginia in 1906, Connecticut and Pennsylvania in 1907, and Maryland in 1908, passed legislation delegating to cities within these states the right of excess condemnation. After the passage of this legislation, legal questions were raised as to the constitutionality of the acts which operated to prevent the enjoyment of the provisions thereof. The question of the legality of the acts were subsequently remedied by constitutional amendments so that as the matter now stands the states of Massachusetts, Wisconsin, Ohio and New York

have laws permitting of excess condemnation. The City of Philadelphia undertook to avail itself of the privilege conferred by the act of the Pennsylvania legislature in the year 1907, but met defeat at the hands of the Supreme Court, which declared the act unconstitutional.

The exercise of right under the law and the application of the principle of excess condemnation is a matter for serious and careful consideration before its use in proceedings for the acquisition of private property. The financing of public improvements where the law of excess condemnation is applied will become more of a problem and tend to reduce the borrowing limit of a community or increase the tax rate according to the method employed to raise the funds. The element of speculation is involved to the extent, that the surplus property not required for the improvement, must be disposed of at a price which would make the cost of that part of the property actually used, less than would have been the case had only the property actually needed been taken.

STREET SYSTEMS

All modern cities have adopted either the rectangular or radiating system of street location wherever possible. In the older sections of some cities, however, the streets were located with little regard to any particular system. The best examples of this condition being around the "Battery" in the City of New York and in the older part of the City of Boston. As the communities expand and develop, it has proved very expensive to remedy this haphazard development in providing additional width of streets and a general replanning to meet the requirements of traffic.

There are of course limitations to the extent with which any system of street layout can be applied owing to questions of topography, railroad rights-of-way, rivers and other water courses, and other local features. The general use of the automobile has brought surrounding cities and towns into closer communication with the large centers of population. The highway system in its development is therefore analogous to a railroad system, in that it is essential that arterial thoroughfares through the city be provided which shall connect at the city limits with all improved state and county roads which lead to other centers of

population. The necessity of this feature of a street system is of comparatively recent origin and did not exist prior to a decade ago.

In cities like Pittsburgh, where the topography is rough and uneven, the best results would have been obtained with respect to street grades in the hilly districts, by neglecting a strict adherence to the rectangular system and locating such highways with more regard for the natural topography. The difficulties which operate to prevent any change in the present method are due to the fact of the advanced development which has already taken place, although considerable improvement has been possible in this direction under the jurisdiction of, and the authority vested in the City Planning Commission. The streets of Pittsburgh are generally laid out on the rectangular system where possible and where grades permit, the average length of the blocks being about 400 feet.

In general the streets of a city may be classified as follows: Alleys, residential, business and commercial, main thoroughfares and boulevards. In some cities the streets are laid out without alleys. This plan requires a passage way either through the basement of the houses or alongside, depending upon the development of the property, so that household refuse, supplies, etc., may be taken to and from the rear. The incorporation of alleys in a street system is objected to by some for sanitary reasons and these objections I regret to say are well founded in many instances. In this city, and many others, the alleys are frequently unpaved and readily become the repository for all kinds of refuse. On the other hand, however, when they are improved and properly taken care of, they serve a very useful purpose in providing access to garages in the rear of the lots and permit of the collection of household refuse from the rear, instead of the front of the houses.

Recently, several cities have made a study of proper lay-out of street systems in the sparsely settled and undeveloped portions of the several communities, with the idea of improving upon conditions as they now exist. This study has been conducted, in most cases, through the medium of planning commissions and the system which appears to meet with the greatest favor is the rec-

tangular block system, modified to the extent of including diagonal main arteries leading to the center of the system.

Several years ago a commission was appointed to prepare a street plan for the District of Columbia, on the outskirts of the City of Washington, and a set of rules were adopted by this commission which have not been improved upon and which are claimed to be applicable to almost any city having a population of 30 000 or more. These rules are as follows:

"1. The avenues should be extended with great directness to the district line, forming a fan-shaped system of highways to the city. This gives the essentials of a spider-web system.

"2. That on account of its simplicity, the checkerboard or gridiron system should be located whenever maximum grades of six percent would not be frequent or cause cuts and fills to exceed twenty feet.

"3. That where direct extensions would be of undulating grade, curved highways are preferable, adding a picturesque feature to the system and relieving the monotony of straight lines.

"4. That curves of small radii should be avoided, and in very broken sections of narrow ridges or valleys it is preferred to follow the sides rather than the top or bottom of the hill.

"5. That the largest number of avenues should lead to or from the city, and cross avenues be infrequent and located on prominent ridges or on easy lines of communication.

"6. That small parks and circles, which are such prominent features of the city plan, be eliminated from the extended system and that large areas on prominent points of view be selected as parks and connected by avenues or curved drives."

One of the chief advantages of this system lies in the fact that while the diagonal streets require the use of more property, the distance between given points is materially shortened, and furthermore there is a decided increase of street frontage on main thoroughfares, the value of which it is claimed tends to offset the loss for the acquisition of additional property required for the location of these streets.

Until quite recently, municipalities had no control over the character of the development upon its streets and in fact there is no such control in many of the cities today, so that the classification of the various streets, with some exceptions, was determined subsequent to the adoption of the plan or system. This difficulty has been overcome, in some places, by the enactment of legisla-

tion giving to municipalities control over the development of the property abutting the streets and the establishment of what is known as the zoning system. With authority over the control of development of property, it is now possible, within certain limitations, to determine in advance the character of the streets in any system and to design and locate them according to their use.

TRAFFIC

One of the most important elements relating to the design of streets, is the question of traffic and some authorities on highway matters consider the requirements of traffic the controlling feature of design. The enormous increase in traffic, particularly vehicle traffic, in all large cities during the last few years has presented problems which are both difficult and expensive to solve. Some of these problems have been met by a general re-routing of traffic, by the construction of new thoroughfares and the widening of old ones, also restricting the use of some streets to one way traffic, and the setting apart of other streets for the use of pleasure vehicles only. In addition to these innovations, many rules and regulations have been adopted by those charged with the problem of traffic regulation and control.

On account of the heavy loads carried by automobile trucks, it has become necessary to limit their speed and loads carried, to prevent the destruction of street pavements. The necessity for this regulation is apparent when you consider that the average load has increased approximately from two tons for the horse-drawn vehicle to an average of about five tons for the motor truck. The element of speed is sometimes neglected in the design of streets and in many instances pavements have been designed based upon a calculation showing the tonnage per yard or per foot of width of roadway, this data being obtained by a systematic count of the vehicles and an estimate of the loads carried by each. It is obvious that a truck carrying a load of five tons and traveling at a speed of about eight miles an hour exerts principally a vertical pressure on the street surface, but when this speed is increased to fifteen miles per hour, the action of the wheels produces horizontal strains, tending to disrupt the street surface.

The importance of having accurate data for the proper design of city streets has already been recognized and counts of traffic have been made in many large cities both in this country and abroad, the results of which are incorporated in a report by the Committee on Streets and Roads of the American Society of Municipal Improvements, Proceedings of 1912, which shows that the load per yard of effective width of roadway ranges from 72 to 4087 tons. From these figures, it is obvious that former methods employed in the design of city streets must be modified to meet the requirements of modern traffic.

An interesting table showing the increase of vehicle traffic in the City of Newark, New Jersey, from the year 1912 to the year 1915, appears in the Municipal Journal, issue of March 2, 1916, page 300, which shows an average increase of 20% in the number of auto trucks and an average increase of 115% in the number of automobiles using the streets of the city during the above period. The total vehicle traffic throughout the city increased 23.8%, notwithstanding a decrease of 29% in horse-drawn pleasure vehicles and 13% in horse-drawn trucks. The record as shown by the City of Newark doubtless holds true in many other American cities.

WIDTH OF CITY STREETS

The determination of the width of city streets is a matter of much importance and is controlled by considerations of traffic, street railway tracks, sub-structures, pedestrian traffic and the general character of the street. Consideration must be given in fixing the width of a street in a wholesale commercial district to the preponderance of vehicle over pedestrian traffic. The width of sidewalks on such a street can be reduced to a minimum and the roadway increased in width to accommodate the vehicle traffic. The main thoroughfares are given over in general to retail business, requiring wide sidewalks to accommodate the people and less width of roadways for the accommodation of commercial traffic, although the requirements of street railway tracks and sub-structures may be controlling factors in determining the width of such streets, rather than the volume of traffic. The width of main arteries through the city, while embodying nearly all the

governing features of streets of different character, is determined primarily by the requirements for fast moving pleasure vehicles.

In residence districts the width of streets is determined largely from questions other than traffic requirements and based upon consideration of light, air and general appearance.

In addition to the foregoing, there are other considerations which control the width of city streets, such as the topography, depth of lots, value of property and cost of construction and maintenance. There is great variation in the width of streets in various cities and in different sections of the same city. Most cities, however, at the present time have adopted certain standard widths of streets according to the different classifications and their use. Of late years the errors of the past have been corrected by providing more liberal widths, with a view to future necessity. In some cases, however, cities have made the error in judgment of providing a too liberal width of street, which has resulted in the imposition upon such communities of an excessive maintenance charge for cleaning, repairing and repaving, and have found it necessary on account of the financial burden assumed to reduce the width of roadway and widen the sidewalks, converting the space thus acquired into parkways adjacent to the foot walk. The present practice in connection with the improvement of residence streets consists of a reduction in the width of the roadways and an increase in the width of the sidewalks. This plan has the advantage of reducing the first cost of the improvement and also of relieving the city of an excess maintenance charge, but its chief advantage lies in the fact that a street may be widened at some subsequent time by reducing the width of the sidewalks and without the acquisition of additional land. Standard widths of street have been adopted by most cities, which range in width as follows:

TABLE SHOWING THE WIDTH OF STREETS IN VARIOUS CITIES

CITY	Width of Street Feet	Width of Sidewalks Feet	Width of Roadway Feet
CHICAGO	100	20	60
	80	16	48
	66	14	38
	60	12	36
	50	10	30
	40	6	28
	30	4	22
PITTSBURGH	80	16	48
	60	12	36
	50	10	30
	40	9	22
	20	3	14
NEW YORK	120	22	76
	100	20	60
*Minimum width of roadway for street with single railway track, 30 feet; with double railway track, 40 feet.	80	19	42
	70	18	*34
	60	15	*30
	50	13	*24
	40	10	*20
LONDON, — Recommended by Royal Commission on London Traffic, 1905			
Main Avenues	140		
1st class arterial streets	100		
2nd " " "	80		
3rd " " "	60		
4th " " "	40 to 50		
Minimum width	40		
PHILADELPHIA,—Principal Streets	60 to 100		
Intermediate Streets	40		

GRADES

One of the most important elements affecting the design of city streets relates to questions of proper and appropriate grades. The ideal grade for traffic requirements would be perfectly level, but this cannot be attained on account of the necessity of providing suitable drainage. The street grades are usually controlled by certain well defined and fixed conditions, such as topography, intersecting streets, balance of cuts and fills, effect upon abutting property and the character of the street with reference to its future use by the public. The transformation in vehicle traffic

has had a distinct affect upon the determination of street grades. In the past, considerable stress was laid upon the resistance due to the inclination and also the tractive resistance of the roadway surface. Since the motor car and truck have sufficient reserve power to negotiate any reasonable grade, these elements of design as affecting the gradients are of much less importance at the present time. This point is best illustrated by a comparison; for instance, assume a street with a grade of 6%, paved with block stone. The tractive resistance is greater than on the same street paved with asphalt, yet there would be less difficulty for a team to haul a load up the grade, than would be the case if the pavement were asphalt and the tractive resistance less. In the case of motor vehicles, a smooth pavement is desirable, except under unfavorable weather conditions. Easy street grades, although always desirable, are not therefore of so much importance as affecting vehicle traffic as when horses were used exclusively for hauling purposes.

The fixing of street grades is less troublesome in level cities than where the ground is broken and irregular. Straight grades are usually preferable, if the rate is not excessive and no deep cuts are required. The principal question which confonts the engineer in the determination of street gradients in the City of Pittsburgh, is necessity of economy in construction and property damage, owing to the prevalence of many hillside streets. All intersecting grades should be eased off with vertical curves, and at street intersections special studies should be made to meet conditions; the parabola is the form of vertical curve most used. The adjustment of the grades at street intersections is often a complex problem, especially so where there is a radical difference in the rate of grade and the streets intersect on an acute angle. With street railway tracks to contend with at such intersections, the problem becomes still more involved.

In cities where the ground is relatively even, the practice is to establish the grade on the center of the street, but this method is not so well adapted to hilly cities and for this reason the grades are established on the curb lines and sometimes on both curb lines, where necessary. In city work there is one very important feature which should always be borne in mind in connection with

the establishment of a grade upon an important street and that is, that the street is for the use of the public and the public interest should not be sacrificed to the individual abutting property owners in order to prevent injury or damage to property at the expense of an objectionable grade.

STREET STANDARDS

In order to simplify and secure uniformity in construction and to avoid duplication of work, certain standards have been adopted by many of the larger cities, which relate principally to the cross section or crown of the streets. This is a subject which has been much discussed by highway engineers and various formulae deduced to govern the matter. There is uniformity in neither the formulae nor the street crowns. It would, of course, be better to abandon the crown entirely and have a level cross section, if this were practicable, but drainage must be provided and the crowning of the pavements is a necessary evil. The curve employed generally is a parabola, although the arc of a circle is sometimes used. Some of the formulae recognize the necessity of reducing the transverse grade according to the longitudinal grade of the street and therefore embody this feature, while others neglect it. The use of all these formulae is restricted to certain widths of roadway and are applicable only when the transverse curb elevations are the same. Moreover, the amount of crown differs with the kind of pavement and all these formulae fail to meet the great variations encountered in street construction. The application of any of these formulae without modification and the exercise of judgment, would result in most unsatisfactory street crowns. In a discussion of this subject by E. A. Steece, M. Am. Soc. C. E., which appears in the *Transactions* of the Am. Soc. Civil Engineers, Vol. 73, P. 228, the practical value of crown formulae for highway construction is well stated when he says:

"There have been, and in all probability there will be, many suggestions for so-called formulas—differing somewhat from uniform ratios—for determining the crown. It appears that the first impulse of many highway engineers is to derive a formula to cover this vexed question; it also ap-

pears to be simple, at first glance, to write a good one, but the further it is developed the more unwieldly it becomes, until, finally, something almost as complicated as Kutter's hydraulic formula (if rational) is produced. Evidently, any formula which will not serve beyond the limits of common practice is not rational."

The practice in this city relating to street crowns is based upon a parabolic distribution of the fall from the high point to the gutter and even this rule must be modified on streets, with car tracks, having either very narrow or very wide shoulders. Upon this theory, there has been established a standard rate of transverse grades designed to meet varying conditions and for different types of pavements. The special committee of the American Society of Civil Engineers, on Materials for Road Construction and Standards for their Test and Use, recommends the following crowns for the various types of street pavements. (See *Proceedings* of the Am. Soc. Civil Engineers, December, 1916, p. 1615.)

Kind of Roadway	Crown Recommended	
	Maximum	Minimum
Gravel	1 in. to the ft.	½ in. to the ft.
Broken stone	¾ " " " "	½ " " " "
Bituminous surface	½ " " " "	¼ " " " "
Bituminous macadam	½ " " " "	¼ " " " "
Bituminous concrete	½ " " " "	¼ " " " "
Sheet asphalt	¼ " " " "	⅛ " " " "
Cement concrete	⅜ " " " "	¼ " " " "
Brick	⅜ " " " "	⅛ " " " "
Stone block	½ " " " "	¼ " " " "
Wood block	¼ " " " "	⅛ " " "

The standard recommended by this Committee agrees very closely with the standards which have been in use in this city for a number of years.

SIDEWALKS

It is essential for all streets, that adequate sidewalks be provided for the use and convenience of pedestrian traffic. The sidewalk is usually considered as the area between the curb and the building line. This area is not always paved to its full width, the width of the sidewalk pavement depending upon the amount of foot traffic.

The most important features relating to sidewalk design and construction consist of the foundation, grade, materials used, drainage and location of the pavement in the sidewalk area. Sidewalk pavements should be smooth but not slippery, have a hard, durable surface and provided with sufficient grade to drain the water from the surface. The materials used for sidewalks in this city are generally concrete, flagstone and rock asphalt. Brick pavements were very common until 1908, when an ordinance was passed regulating sidewalk construction and prohibiting the use of brick as a paving material. The brick pavements were seldom laid on a concrete foundation, the bricks were soft and depressions and holes quickly appeared, making a rough and uneven surface.

The width of the paved portion of the sidewalk varies according to the need of pedestrian traffic, from five feet on residential streets, to the entire width in the more congested and business districts of the city.

The location of the paved walk with reference to the curb on residence streets is a question which has received considerable attention of late. The Shade Tree Commission recommended a change in the location of the pavement, placing it next to the curb, with the planting space for trees between the building line and the edge of the walk, instead of between the curb and walk. There are some objections to either method, but it is believed there are less, where the walk is set back from the curb from two to three feet.

Driveways across the sidewalks must be provided for access to abutting property where required, and these driveways should be so designed as to eliminate, as far as possible, any disturbance of the continuity of the foot walk. In the past, the practice was to depress the driveway across the sidewalk, making a step equiva-

lent to the usual gutter depth. This construction is being gradually eliminated, particularly in the residence district and the driveways are now built so that the surface coincides with that of the sidewalk; the change in grade being made at the outer edge of the foot walk and extending to the gutter. The change of driveways in the manner described is not always possible in the closely built up sections of the city, for the reason that a revision of grade is frequently necessary, which would not justify the improvement.

Sidewalk construction is regulated by an ordinance of Council which specifies the materials which shall be used for the purpose, method of construction, and other features of the work. The slope specified is one-quarter of an inch rise to each foot of width. The law provides that sidewalks shall be laid and maintained by the abutting property owners, which applies to improved streets and then upon due notice from the Department of Public Works. The enforcement of the provision of the law relating to sidewalk entails considerable labor on behalf of the city and frequently involves long periods of time between the completion of the street improvement and the laying of the sidewalk pavement.

It is the writer's opinion that this law should be amended, so as to give the municipal authorities the right to lay sidewalks when the street is improved and the cost of same should be assessed against the abutting property in a similar manner to the rest of the street improvement. This change would be beneficial, insuring uniformity of construction and better work. On unimproved streets, neither the city nor the property owners are required to lay sidewalks, although it is a common practice for the city to provide funds for the building of board-walks upon such streets. There are many objections to these board-walks from an economic point of view, chief of which is the short life and the danger of personal injury.

The specifications for concrete sidewalks call for a concrete slab, five inches in thickness, laid upon a five-inch foundation of gravel or coarse cinders. The concrete is mixed in the proportions of one part of Portland cement, two parts of sand and

four parts of gravel, and the wearing surface is obtained by sufficient tamping of the concrete to force the mortar and fine material to the surface.

DRAINAGE

Another essential feature of street design is drainage, which, if neglected or inadequately provided for, will result in the destruction of the street. The extent to which drainage must be provided, depends upon the condition and character of the soil, topography, grades, weather conditions, etc., and may consist of two parts: first, providing drainage for the sub-soil and second, the street surface. The extent to which drainage of the sub-soil must be provided, depends upon the locality, character of ground and weather conditions. In sand, gravel or other porous materials, under drainage may frequently be neglected, but in clay or other soils which are impervious to water and subject to frost, under drainage becomes of vital importance to the stability of the pavement structure. In soils such as predominate in this locality, drainage is usually provided by the construction of "French" drains laid under the curbs and discharging into the catch basins, and where conditions are very severe, they are supplemented by the use of cross drains at frequent intervals.

To provide drainage for the street surface, catch basins and drop inlets are used, the number and distribution depending upon the length, width, grade of the street and volume of run-off. There is a great variety of design in these structures, although most large cities have adopted standard catch basins and castings to meet their local requirements. In places where the grade is steep and the surface water reaches the low points quickly, as for instance in the city, the design of the opening into the catch basin becomes an exceedingly important matter, and if proper provision is not made in the opening, serious flooding will result. Steep intersecting and unimproved streets and hillsides carry large volumes of earth and debris, which quickly choke up the basins, and when these conditions occur, the problem is to keep

the water-way clear, rather than providing sufficient opening into the catch basin.

Certain standards of various types of catch basins have been designed to meet the conditions peculiar to this city and although not ideal in all respects, are generally satisfactory.

FOUNDATIONS

The necessity of a good foundation, applies with equal force, whether it is for a street pavement or any other structure, and requires no argument before this body, but however important the necessity may be for a good pavement foundation, the fact remains that less attention has been paid in the past, to this most important feature of street design, than any other element of design or construction.

Where concrete foundations have been used, the thickness has been determined in an arbitrary manner or based upon experience in other places, but more frequently, the pavement structure has been built upon the natural soil or upon yielding and unstable foundations of broken stone or gravel. The European practice in the matter of pavement foundations is far superior to American practice, in that much thicker foundations are used to support the street surface. One of the chief reasons for this condition, is undoubtedly due to the fact, that there is less disturbance of the street surface, for the installation of subsurface structures. The practice abroad upon main thoroughfares, is to consider the pavement structure as of two parts—the foundation, which is permanent, and the wearing surface, which is subject to replacement as it wears out. This practice could be adopted in this country, on all types of pavements laid upon a concrete foundation with less depth than used abroad, if the pavements were not torn up so frequently and were maintained with the same degree of efficiency. Where the maintenance is neglected to the extent existing in this country, the foundation becomes worn and so irregular from frequent openings that the entire structure must be replaced in order to secure satisfactory work.

In most American cities the concrete pavement foundation rarely exceeds 6 inches in thickness and is frequently not over 5 inches, the difference in depth being determined by the character of the street. Many of the pavements in the older sections of this city and others, were laid upon gravel or sand foundations which were wholly inadequate to support the pavement surface in a smooth and even condition. To improper pavement foundations can be attributed much of the criticism directed at the condition of city streets in many cities of this country.

In the construction of a new street, the grading is first completed and then starts a campaign of trench digging for the installation of sewers, water pipes, gas pipes, conduits, etc., covering practically the entire street area. After all these structures have been installed, with the necessary connections to the abutting houses or curb line, the disturbance of the original ground is complete. The trenches are back-filled in the best possible manner, with the material thoroughly rammed, after which the ground is rolled with a ten-ton roller. With all these precautions, the trenches will subsequently settle. It is not difficult to imagine the effect of such settlement, upon pavements when laid upon a yielding foundation or even upon a concrete foundation, without adequate thickness. It is conceded by most municipal engineers that all street pavements should be laid upon a concrete foundation, but the thickness of same is still open to much discussion. The greatest obstacle operating to discourage the use of thicker concrete foundations is the frequent openings which are made therein. It would be detrimental to the public interest to prevent street openings, since it would stifle development and entail great financial loss, and the only remedy seems to lie in proper control.

If the present practice of using the minimum depth of concrete foundations for street pavements is to continue, it would seem to the writer, advisable to use a richer mixture of concrete, possibly 1 : 2½ : 5, instead of the proportions 1 : 3 : 6, which is in general use. Another cause contributing to the rapid destruction of pavements is the insufficient time allowed for the concrete foundation to set and attain its strength, before the wearing surface is laid thereon. The evil effects of this practice

are applicable only where a mastic is used, which requires the use of a heavy roller to secure compression and in this process the concrete foundation is broken and disturbed under the weight of the roller. Another cause for the use of concrete pavement foundations with shallow depth, is found in the competition existing in many of the patented pavements, due to the necessity of reducing the cost in order to secure contracts.

RETAINING WALLS

An essential, expensive and important part of street construction and design in this city and others of similar topography, consists of the building of retaining walls to support the lower side of hillside streets. The question is frequently raised as to why the city fails to build retaining walls upon the upper side of hillside streets, where their apparent need to retain the slope and prevent sliding is nearly as great as upon the lower side to retain the highway. The answer is, that the law requires the owner of the property upon the upper side, to protect the same and prevent it from sliding upon or otherwise interfering with the use of the public highway.

The theory of the law in this respect is sound, but its adoption in many instances would lead to the serious embarrassment of the city. Streets are occasianlly built where portions are through deep cuts and every principle of good engineering judgment would dictate the building of retaining walls to hold the slopes, yet the city cannot lawfully enter into this work. The value of the property may be low and the expense entailed by the owner for the building of retaining walls might easily exceed the value of the property. A notice from the city to protect and prevent the property from sliding upon the highway, would receive scant consideration, as the owner would undoubtedly prefer from an economic standpoint, to permit the City to take the property, rather than submit to the expense of building retaining walls, the cost of which might exceed the value of the property.

Another perplexing problem is met with, when buildings are situated below the grade of a street, when the question arises as to the wisdom of building a substantial retaining wall, with the

possibility of the house being raised to the grade of the street in the near future and the wall buried; or building a timber cribbing. In either case, there is likelihood of the property owners raising the houses soon after the completion of the work, in which event either structure would serve no useful purpose. The use of timber cribbing is confined to cases of this nature, which make it desirable to use cheaper and less durable materials than concrete.

Reinforced concrete retaining walls are used in connection with street improvement work, wherever the conditions are favorable. The principal advantage over the gravity section is in the cost, although this is generally applicable only to retaining walls having a height of fifteen feet or more. The gravity section of retaining wall is employed where the height of wall is less than fifteen feet and with frequent changes in section. A very complete and comprehensive paper upon retaining wall practice in the City of Pittsburgh has already been presented to the Engineers' Society of Western Pennsylvania, by Mr. C. M. Reppert, M. Am. Soc. C. E. (see PROCEEDINGS, October, 1910), hence further reference to this subject is unnecessary.

STREET RAILWAY TRACK CONSTRUCTION

The old adage that a house should have a good foundation, dry cellar and tight roof, applies with equal force to a street railway structure. There is a difference of opinion however, between railway and municipal engineers about what constitutes a good foundation for a street railway track; upon the other features there is less difference of opinion. The question of foundation is viewed from entirely different angles. What is considered as a suitable foundation for a street railway track by the company, is not always acceptable to the city.

The importance of a proper type of street railway track construction cannot be over-estimated, as upon the character of the track construction depends the ability of the Company to maintain the pavement within the railway area and the City the pavement adjacent thereto. From the railway engineer's point of view, six to eight inches of stone ballast under the ties provides

a suitable foundation for the track structure and makes a flexible roadbed, preventing undue wear and tear on the rolling stock. It is this flexibility of the track foundation which makes it impossible to satisfactorily maintain the street pavements. The necessity for proper track foundation becomes more apparent when it is stated that the street railway structure occupies more than 50% of the central portion of the roadway.

Accepted theories and practice of railroad engineering with respect to track foundation is not applicable where the track is located upon a busy and heavily traveled city street, for the reason that the street must be paved and maintained for general public use, and all users have an equal right therein; whereas, in the case of steam railroads, the right of way is owned by the Company and used only for railroad purposes. There are several types of rigid street railway track construction which are generally used, the more common consisting of a concrete foundation six inches in thickness placed under the ties. The flexible type of track foundation consists of gravel, broken stone or slag ballast, placed under the ties to a depth of from six to eight inches.

With the increasing weight and volume of traffic, the track joints become loose, the pavement settles and deep ruts and holes are quickly formed in the pavement, restricting the public in its right to the full enjoyment of the use of the street. It is a fact that most of the large cities today require a rigid and substantial concrete foundation under the railway area and only by the use of such a foundation, will it ever be possible to maintain the street pavement in a satisfactory condition. There are some difficulties encountered in the use of a concrete track foundation, in connection with operation and inconvenience to the traveling public while the work is in progress, which is especially true in a city like Pittsburgh, but these difficulties are more than offset by the benefits derived from a permanent and smooth street pavement.

There are locations where a ballast foundation would unquestionably answer every requirement but certainly not on busy and heavily traveled city streets. No one questions the necessity

for a concrete foundation under the pavement on the "shoulders" of a street occupied by railway tracks and if this point is conceded, then why is not the same type of foundation necessary for the central portion of the street, which is subjected to a more intensive traffic?

Another feature relating to this subject is the type of pavement used in the railway area. The companies usually prefer block stone on account of their durability and ease of removal for making repairs. There would be less objection to this character of pavement, if modern stone blocks were used in all cases and laid upon an unyielding foundation. The chief objection to their use is on account of settlement, causing a rough and uneven surface. However, as a general proposition, there is no reason why the type of pavement in the railway area should not conform to that used elsewhere upon the street.

The question of maintenance of the pavement is one that deserves serious consideration. This responsibility, under existing grants, devolves upon the companies, based upon the ancient theory that the pavements are worn out and dirtied by the company in the operation of its cars. The provisions of the grants with respect to maintenance, make this duty mandatory upon the companies, notwithstanding the fact, that most of the conditions upon which they were based, no longer exist. This phase of the street maintenance problem was discussed in detail by the writer in a paper entitled "A Suggested Change of Policy for Maintaining the Pavement in the Railway Area," before the American Society of Municipal Improvements, in 1915. (See *Proceedings*, A.S.M.I., 1915, p. 471.)

SUB-STRUCTURES

Under modern conditions of city activities, it is essential in the design or re-planning of city streets to make adequate provision for width of street to accommodate the sub-structures. The necessity for this provision is accentuated by the desire to remove and clear all surface obstructions which interefere with both pedestrian and vehicle traffic, with light, the fighting of fires and more particularly the general appearance of the street.

The interest in this movement is shared alike by both municipalities and public utility corporations, since the service rendered is less liable to interruption, and the element of damage to persons and property is lessened. In order, however, to reduce the cost of such underground installation and to prevent unnecessary disturbance of the street pavement and interference with existing structures, accurate maps, showing the location and depth below the street surface of all the sub-structures, should be available.

In laying out new streets, the width of sidewalks should be sufficient to permit ample space for the installation of all sub-structures, which would prevent tearing up the street pavement for repairs and service connections. Under this system, the initial cost in many cases would exceed the cost of a single line located in the roadway, yet it is believed that the reduced cost of making service connections, repairs to the structure and restoration of the street pavements, would in time more than offset the difference in first cost and at the same time overcome the objectionable features of the old method.

As already stated, one of the greatest obstacles, operating to prevent the adoption of deeper pavement foundations, is the necessity for opening up the street pavement for making repairs to sub-surface structures and laying service connections. Some European cities have solved this problem by the building of pipe galleries and some American cities have investigated the matter, but the use of pipe galleries in this country is very limited and was made necessary by the construction of subways.

Closely identified with the subject of sub-structures is that of the control of openings in street pavements, which was made the subject of a paper presented by the writer before the American Road Builders' Association, entitled "The Development of the Street Opening Problem—Its Effect and Control." (See *Proceedings,* American Road Builders' Association, 1916, page 202.)

PAVEMENTS

The word pavements as used in common practice, refers to a hard and durable street surface, although within the strict meaning of the word, it applies to any surface which has been rammed or beaten down, although there has been much discussion among engineers as to what really constitutes a pavement. The building and paving of highways has probably done more for civilization than any other engineering work. The art of road building has passed down through the centuries and yet is far from being perfect. Various kinds of materials have been employed for highway pavements, depending in most part upon the ability of the locality to furnish suitable material.

The selection of the type of pavement, should be governed by local conditions for the reason, that a pavement which is satisfactory in one place may prove very unsatisfactory in another, both in respect to its character, economy and durability. The ideal pavement should be durable, smooth, easy to clean and maintain, non-slippery and economical. The requirements of a satisfactory pavement for city streets are exceedingly severe and no materials have as yet been discovered which fulfill all these requirements.

For this reason various types of pavements are necessary, which may be compared by assigning numerical values to their different properties, based upon the ideal pavement as being 100%.

PROPERTY	TYPE OF PAVEMENT						
	Percentage Ideal Pavement	Sheet Asphalt	Bituminous Concrete & Macadam	No. 1— Block Stone Grouted Joints	Creosoted Wood Block	Brick— Grouted Joints	Concrete
Durability...	21	14	15	21	16	16	10
Smoothness..	20	20	19	15	20	17	18
Maintenance*	38	30	31	32	38	30	28
Slipperiness..	7	4	6	7	4	5	5
First cost....	14	10	10	8	8	9	14
Totals...	100	78	81	83	86	77	75

*Includes cost of repairs, cleaning and sanitary qualities.

The foregoing comparisons are based upon the experience in this city with the various types of pavements, from which it will be observed that on this basis of comparison, under average conditions of traffic, the result is as follows:

1st. Creosoted Wood Block,
2nd. Block Stone with grouted joints,
3rd. Bituminous Concrete or Macadam,
4th. Sheet Asphalt,
5th. Brick with grouted joints,
6th. Concrete.

It should not be assumed that the selection of a street pavement can be based upon any preference shown by numerical comparisons, for other equally important elements, arising from local conditions, must be considered such as the character of the street, i. e., whether it is a main artery, residence or commercial street, volume and kind of traffic and the grade thereof. The selection should only be made after all these elements have been investigated and considered. The adaptability of the various kinds of pavements to street grades is also a matter of much importance. Until recently the limiting grades for certain types of pavements were more or less uniform throughout the country, especially in the larger cities and were based upon the foothold they would provide for horse-drawn vehicles. There is a tendency at present, among engineers, to increase the permissible grades formerly used for smooth pavements, owing to the decline of the horse-drawn vehicle and the more general use of the motor car.

The following table gives what the writer considers as the limiting grades upon which various types of pavements should be used for the streets of Pittsburgh:

Type of Pavement	Limiting Grade Percent
Sheet Asphalt	6
Bituminous Concrete and Macadam	7.5
Blockstone (best quality) grouted joints	10
Creosoted Wood Block	3
Brick, grouted joints	8
Concrete	10

In a level city, no attention to this detail is necessary, while in a hilly city there is a tendency to place the limit too high, in order to secure as much smooth pavement as possible.

The life of any pavement depends, of course, upon the amount and kind of traffic to which it is subjected, and also the extent of the maintenance. There is so much variation in traffic conditions in different sections of the country, that this difference is reflected in the life of the same type of pavement when comparison is made. Many pavements require replacement long before their age limit is reached, due to destruction from excessive openings, settlement of ground, or from other causes.

In the City of Pittsburgh, under average conditions of traffic and pavement maintenance, the life of different types of pavements, and under present methods of construction, are estimated to be as follows:

Kind of Pavement	Average Life Years
Sheet Asphalt	15
Bituminous Concrete and Macadam	12
Block Stone, grouted joints	25
Creosoted Wood Block	18
Brick, grouted joints	16
Concrete	10

To meet a variety of street conditions, as they exist in this city (and I believe we have been endowed with more than our share), several standard types of pavements have been designed, which consist of the following:

Standard Sheet Asphalt,
Bituminous Concrete and Macadam,
Block Stone,
Creosoted Wood Block,
Brick,
Concrete.

Under these general types of pavements, there are modifications of block-stone, wood- block and brick pavements, classified according to the material, size of blocks, joint fillers and cushion.

Sheet Asphalt: Sheet asphalt is what may be considered the popular pavement by the public. It has many good qualities and much can be said in its favor. It is sanitary, easy to clean and repair, smooth and not noisy under traffic, it presents a pleasing appearance and is capable of sustaining a medium traffic and well adapted for the paving of residence streets and boulevards. Under certain weather conditions, it becomes slippery and should never be used on streets with a steep grade.

This pavement is laid in two courses, each 1½ inches in thickness, the lower course being the binder and the upper, the wearing surface. It is always laid upon a concrete foundation. There has been considerable change in the composition of this pavement in the last ten years. Oil asphalts are now used extensively, where previously only the natural asphalts were used. The binding course has also been changed from open to closed binder, the mineral aggregate in the former consisting of all ¾-inch stone, while in the latter it is graded from 1¼-inch stone to dust. It is believed that with the close binder, greater cohesion and stability is attained.

The manufacture and laying of sheet asphalt pavement, requires technical skill and experience, as upon the proper grading of the mineral aggregate and other important features, connected with the mixing and laying upon the street, will depend the life and serviceability of the pavement.

To secure a first class pavement with sheet asphalt, it should never be laid during wet or cold weather, and careful attention should be paid to the rolling, in order to secure sufficient compression to produce a structure which will be compact and impervious to water. For the proper preparation of the materials and proportioning same, a laboratory is necessary at the works and the preparation of the mixture should at all times be under the supervision and control of a competent chemist.

Bituminous Concrete and Macadam: Bituminous concrete and macadam pavements were laid some twenty-five or thirty

years ago, the binding agency consisting of coal tar. Many such pavements were laid in the City of Washington, D. C., in some of the New England cities and also to a very considerable extent in the City of Pittsburgh. This type of pavement was known locally as Vulcanite, and was laid on a broken stone foundation. Many of these pavements are now in existence and have given very satisfactory results. The principal reason for their discontinuance was due to the fact that the tar was very slow in hardening in warm weather, and it frequently would be several weeks, after the pavement was completed, before it could be used.

Within the last decade, this type of pavement has again come into use, but in a somewhat modified form. The binding agency consists of asphaltic cement and scientific principles have been adopted for the grading of the mineral aggregate, designed to reduce the voids to a minimum. It is usually laid on a concrete foundation, where used for city streets, but on country roads it is frequently laid on a broken stone foundation. Certain advantages are claimed for this type of pavement over sheet asphalt, the principal one, being that the surface is less slippery and can therefore be used on steeper grades. It is also claimed by some engineers that the pavement is more durable and therefore will withstand heavier traffic, although this has not been the experience in this City, with the limited yardage which has been laid.

In cities where macadam and telford macadam pavements predominate, bituminous concrete pavement has found favor, in its adoption for a wearing surface, using the old pavements as a foundation. A construction similar to this was laid on Bigelow Boulevard and also on some of the other boulevards of the city.

What is generally conceded to be the most scientific and best pavement of this type, is protected by basic patents, which operate in many instances to prevent its more general use.

A specification has been formulated, after considerable study, which embodies the main features of the patented article, but which does not infringe the patent rights. This pavement is laid under what is known as the Topeka specification. In localities

which are denied the right of using a patented pavement, the Topeka specification has been generally used.

Block Stone: Block stone pavements have been used for a great many years in one form or another. The early practice consisted of the use of large granite blocks, which has gradually been modified in favor of smaller stone, with more attention to foundation, quality, size and joints. Within the last few years, specifications for block stone have been prepared and adopted by most of the larger cities of the country. These specifications reduce the depth of the blocks from 1½ to 2 inches, and permit the use of blocks from 5½ to 5 inches in depth, and also provide for smaller joints. On account of the variation in the depth of the stones, a sand cushion is essential, in order to secure a uniform surface.

The question of joint filler for block-stone pavements has an important bearing upon the wearing qualities of the stone, the smoothness of the pavement, its sanitary aspect and ease of cleaning. At the present time, general practice favors the use of Portland cement grout for filling the joints, which it is claimed gives greater stability to the pavement, protects the upper edges of the stone from excessive wear, permits of easier cleaning, and prevents the entrance of water into the joints. It is contended by some engineers that block-stone pavement, with a cement grout filler, makes a more noisy pavement under traffic than where bituminous filler is used. There is also a practical objection to the use of Portland cement grout fillers upon busy streets, owing to the necessity for keeping the street closed a sufficient length of time to permit the grout to thoroughly set. Cases frequently arise where the use of the Portland cement grout filler is undesirable for the reasons cited above and where a bituminous filler must of necessity be used.

Block-stone pavements are particularly adapted for use upon streets with steep grades and also in the business and manufacturing districts of the City, where there is heavy hauling and where noise is not a serious matter.

Recently, an economy has been effected in some cities, where conditions were favorable, by recutting the old block-stone and

relaying them with grouted joints. The success of this practice depends upon a great number of conditions which must be carefully considered, and the final cost of such a pavement balanced against the life of a block-stone pavement laid with new material.

Creosoted Wood Block: The modern creosoted wood block pavement comes nearer meeting the requirements of an ideal pavement than any other type now in use. The chief advantages are that it is able to withstand intensive traffic, that it presents a smooth and pleasing surface, is noiseless under traffic and easy to clean and maintain. The wood commonly used is long leaf yellow pine, although other kinds of wood are sometimes used. A preservative and water-proofing compound is injected into the wood, consisting in the main of creosote oil, in the proportion of 16 lbs. of oil to the cubic foot of wood. The size of the blocks are as follows: 5 to 10 inches long, with an average length of 8 inches; 3 to 4 inches in width and either 3½ or 4 inches in depth. The maximum variation allowed in the depth of the blocks is 1/16 of an inch, and in the width, ⅛ of an inch.

This type of pavement is always laid upon a concrete foundation. The first wood-block pavement which was laid in this country, was laid with a sand cushion and sand was used as a filler for the joints. Experience with this type of construction led to the belief that a smoother and better pavement could be secured by using a mortar cushion and filling the joints with Portland cement grout. Many pavements were subsequently laid in this manner. The cushion consisted of sand and cement mixed dry in the proportion of 1 to 3, and which was sprinkled with water immediately in advance of laying the blocks. The joints were filled with cement grout.

The practice abroad is to omit the cushion altogether and to lay the pavement directly upon the concrete foundation, dipping the blocks in hot pitch immediately before laying. This practice has recently been adopted in this country and many creosoted wood-block pavements are now laid in this manner, except the dipping of the blocks is omitted and the concrete foundation is painted with a hot mixture of asphaltic cement and the joints grouted, although in some places a bituminous filler is used.

The proper kind of oil for the treatment of paving blocks is a question upon which there is great divergence of opinion and which has been a source of much inquiry and investigation. The essential features of the treatment consist of preventing decay and water-proofing the wood. It has been claimed that the so-called heavy oil containing an admixture of coal tar was controlled and monopolized by a single company and that therefore competition was impossible. Whether this is so or not, the fact remains that the specifications were modified to the extent of eliminating the coal tar and a straight creosote oil specified. An objection to creosoted wood-block pavement, is the tendency toward exudation of the oil, commonly termed "bleeding," which occurs when exposed to the hot sun. Other objections to the use of this pavement is the danger from expansion, which may cause disruption, and also their extreme slipperiness under certain weather conditions. The annoyance caused by the exudation of oil is easily remedied by the sprinkling of dry sand upon the surface and troubles from expansion can be avoided if due precaution is taken by immersing the blocks in water prior to laying and adequate provisions made for expansion at the curbs. Creosoted wood-block pavements should never be laid upon a grade exceeding 3%.

To overcome the objection to slipperiness, blocks are manufactured with grooves and lugs so as to provide wider joints and furnish a foot-hold for horses. These expedients, however, are considered of doubtful efficiency, particularly as the surface of the pavement laid with these special blocks soon becomes smooth, after which their utility is greatly lessened.

Brick: The older brick pavements were laid upon a gravel or sand foundation. The brick were soft, no special attention paid to wearing qualities and in size were similar to common building brick and were laid on edge with sand filled joints. The modern brick pavement is laid upon a concrete foundation with special paving blocks, having the following dimensions: 3½ × 4 × 9 inches. Rigid specifications which have become standard, provide for appropriate material, certain physical tests relating to abrasion, absorption and other physical properties.

Brick pavements, until recently, were laid almost universally upon a sand cushion, but at present the omission of the cushions is advocated. It is now recommended that the brick be laid directly upon the concrete foundation before it hardens, the purpose of the change being to secure a monolithic construction; or in other words it is assumed, that the concrete will adhere to the brick and eliminate the line of cleavage formed by the cushion between the brick and the concrete.

The joint fillers in common use for brick pavements are Portland cement grout and bituminous cement. The monolithic type of brick construction which is being advocated, has not been used in this city, for the writer is inclined to the belief that such a structure is too rigid, presents serious problems of expansion and renders extremely difficult the making of openings and the restoration of the pavement. Brick pavements have found considerable favor among highway engineers for the paving of country roads, residence streets and in some of the western cities for busy streets, where the traffic is relatively heavy but not concentrated. The use of brick pavements in this city has been confined to the paving of alleys and residence streets where the traffic is light. Paving brick appears to be too soft to withstand the abrasive action of the heavy shoes with which the horses in this city are shod.

Concrete: Concrete pavements are of recent origin, as applied to modern conditions. They have been used extensively for the building of country and state roads, but only to a limited extent for the paving of city streets. Their merit lies chiefly in the economy of first cost; they are smooth, sanitary and easily cleaned. The durability or wearing qualities of this type of pavement are as yet undetermined, owing to the limited time they have been in use. Pavements of this type must be properly proportioned, laid with care and adequate provision made for contraction and expansion. The adaptability of concrete pavements for city streets is questionable, owing to certain practical questions relating to the making of openings, restoration of the pavement, durability and repairs. For the purpose of experiment and demonstration, several unimportant alleys have been paved with

concrete. Provision was made, however, in fixing the gutter depth, so that a wearing surface of asphalt could be placed over the concrete at some subsequent time, if found necessary.

CITY CONTRACTS

The approved form of city contract is rigid and severe, and under its terms all responsibility is assumed by the contractor. All city contracts provide that the contractor shall file a bond in the amount of 50% of the estimated cost of the contract, the conditions being that in case an award is made, that he will execute the contract and complete the work embraced therein, in a satisfactory manner. In addition to the bond, the contract provides for a retention of 10% of the value of the work completed, upon all current estimates. Contracts which are made for work, where the funds are provided either by direct appropriation or by the issuance of bonds, provide for payment of monthly estimates, but all contracts for improvements where the cost is assessed against the abutting property owners, no cash payments are received, until after the completion of the entire work, embraced under the contract and then only as assessments are paid into the city treasury. The contractor, however, receives 6% interest on the amount of his final estimate, from the date of the completion of the work, pending the receipt of assessments. After the expiration of two years from the date of completion, the city assumes the obligation and becomes liable for immediate payment of any outstanding balance. Under this provision of the law, it is therefore apparent that all assessment contracts must be financed by the contractor and only such contractors as have financial resources and established credits, can assume to take contracts where the amount involved is large.

The contracts further provide for guarantees for the various types of pavement as follows:

Character	Guarantee—Years
Sheet Asphalt	5
Creosoted Wood Block	5
Block Stone	1
Brick	1
Concrete	1
Sidewalks and Curbing	1

The City assumes no responsibility for the use of any patented articles employed in the execution of the work under the contract, nor does it assume any liability for accidents or damage to the work, nor for any damage arising from personal injury, damage to property or from any other cause. The fundamental law relating to city contracts provides, that there shall be, free and unrestricted competition based upon the plans and specifications relating to the contract, and further requires that all contracts shall be awarded to the lowest responsible bidder.

CONSTRUCTION

The construction of city streets is unlike most other engineering work. The building of a reservoir, highway bridge or building is confined to questions arising between the two contracting parties and entail matters over which either one or the other have absolute control; whereas, a contract for the construction or reconstruction of a busy city street is affected by many obstacles and conditions which arise from the nature of the work and over which neither of the contracting parties have immediate control and supervision. A street improvement requires, beside the work included in the contract, a vast amount of work to be performed by public utility corporations and individual property owners. In addition to this is the interest of the abutting property owners, the general public and particularly the traveling public in the use of the street, and the execution of the work.

The length of time consumed in making a public improvement provides a fertile field for unjust and unwarranted criticism of city departments, which generally arises from a lack of knowl-

edge of true conditions and facts under which, work of this character is prosecuted.

It might be interesting to enumerate some of these conditions which operate to retard and delay the progress of street improvements. For instance, a contract is awarded for the reconstruction of an improved street, which provides for raising the grade several feet above the former level, and upon which there is located a double track street railway. As soon as a contract of this nature is awarded, all property owners whose buildings require raising to meet the new grade, are notified to start work upon raising their buildings, but invariably wait, with few exceptions, until the work upon the street is well advanced, rather than proceeding immediately and thus getting their work completed and out of the way well in advance of the city contractor.

One of the conditions of the problem is to maintain the street car service and provide access to stores and buildings along the line of the improvement for pedestrians, so there will be as little inconvenience to business as possible, and frequently provision must be made, where there are no rear entrances, for the delivery of merchandise.

After the contractor starts work, it is subject to serious delay at various stages of its progress, to permit of the laying and readjustment of sub-structures and service connections. The working space is frequently limited, which makes it impossible for more than one company to prosecute their work at the same time.

The progress which can be made upon work of this character is further limited by the extent to which a street can be torn up, without serious interference to traffic and increase of the fire hazard.

One of the chief difficulties is the consolidation of the fill, owing to the presence of numerous manholes, gate boxes, etc., and the limited space in which to operate a roller. Much of the filling must be rammed by hand, irrespective of the character of the soil.

It is an extremely difficult matter to determine the exact length of time required to complete a contract of this nature,

owing to the extent of work which must be performed outside of the contract and necessary for its completion. As a general proposition, the length of time required for the laying and re-adjusting of sub-structures, adds one hundred percent to the time necessary for the completion of the city contract.

MAINTENANCE

The cost of maintenance and the method employed therein have a most important bearing on the design of city streets, particularly in the selection of the type of pavement and of the detail of construction. An adequate and well organized repair force provided with sufficient plant and equipment are most essential features in the up-keep of the city's street system. Repairs must not only be made satisfactorily and economically, but promptly as well. This is particularly so in case where pavement defects once appearing, proceed and expand rapidly to final disintegration and cover large areas. The extent to which pavements of this class, particularly those of a bituminous character, may be employed, depends therefore in a great measure upon the plant, efficiency of the maintenance force, and its ability to make repairs, as necessity arises.

The renewal or replacement of a pavement, requiring a new foundation, curbing, etc., is called repaving, and in this city, the work is done by contract. Ordinary repairs and the restoration of pavements over openings is done by City force, this work being included in the functions of a maintenance bureau. The repair and resurfacing of sheet asphalt, and other bituminous pavements upon the old foundation, is done by the city force. The facilities of this city for the repair and maintenance of asphalt and other bituminous pavements are excellent and perform such work quite satisfactorily, so that we have been enabled to utilize pavements of this nature to the fullest extent.

The cost of street cleaning constitutes one of the largest items of municipal expenditures. In 1915, the total cost was $404 000, this being expended upon 542 miles of improved streets, embracing a pavement area of about 7 800 000 square yards.

The relation of the pavement surface to the cost of cleaning is apparent from the above statement, and emphasizes the importance of laying a pavement, which is easily cleaned. It also follows that a higher standard of street cleaning is demanded upon smooth pavements, as the dirt is more noticeable and the dust nuisance greater than upon block-stone pavements under similar conditions.

CONCLUSION

The foregoing general review of features relating to street design and improvement are indicative, in some measure perhaps, of the ever changing conditions of city life and its requirements. However broad and comprehensive may be the plans, providing for the future development of a city, it lies beyond the power of human foresight to anticipate the problems of the future. The effect of engineering progress upon the wonderful development of large centers of population is apparent and being recognized by the people. The development of the railways, furnishing cheap and quick means of travel from the outlying districts, has made possible a growth in cities and towns, which was never dreamed of prior to this time. The accommodation of the city to this abnormal growth is the problem of the future. The means now employed to accommodate it, will doubtless prove inadequate, but when that time arrives, the engineer will be able to solve the problem as he has done in the past.

DISCUSSION

Mr. George H. Neilson:* I would like to be advised as to the reason for the present condition of Frankstown Avenue Extension. The original paving was done with Belgian block. A few years ago the blocks were covered with asphalt. In a great many places the asphalt has not adhered to the stone and the resulting holes have made driving an automobile both unpleasant and unsafe.

Mr. Louis P. Blum:† In planning city streets it is a peculiar fact that, though City Planning Commissions are of very recent origin, yet they fulfill a much-needed function. The private owner in the development of a private property forgets the community interest. It requires the City Planning Commission to take care of the city's interests in the design of these improvements which are so permanent. In fact, I think it is a mistake that city planning has not been carried much further. It is a mistake that there is not an Allegheny County Planning Commission; indeed we might say a definite plan should be followed throughout the State of Pennsylvania. Here is the State prescribing regulations of sewage disposition and matters with reference to sanitation and water supply, yet all of these are tied into the proposition of proper planning of city areas, and it seems to me there should be some power to step in at the beginning of such planning rather than to allow city and borough development to go on without plan and then afterwards rectify these errors when it must be at considerable expense.

There are various problems with reference to city planning, the zoning feature, for instance, is quite a recent development, yet it is a necessity in modern cities. Every man building a home should be protected in that investment against the invasion of factories or any other factor which will tend to depreciate his property. In this respect Pittsburgh is somewhat behind other

*General Manager, Braeburn Steel Co., Braeburn, Pa.

†Consulting Engineer, Blum, Weldin & Co., St. Nicholas Bldg., Pittsburgh, Pa.

cities; Philadelphia, for instance, has recently established a city zoning commission.

The widening of streets has been spoken of and it seems to me this is a vital question. There is too much of a tendency to establish a rule without variation. A street should be studied with the function which it is to perform in view and its width determined from that standpoint alone. Too wide streets not only entail extra cost of improvement and maintenance, but they also take away just so much property from private use and put it into public use and make the burden of taxation on the private owner just that much greater. This is especially true in the residence districts. The main thing in a residence district is to keep the space between houses as great as possible and there ought to be more legislation allowing cities and boroughs to establish building lines outside of the street lines and to restrict the building of structures within those lines. It is unfortunate that the decisions of our courts within the past few years have been so unfavorable with reference to these building lines that have been established on various plans of lots. The courts have taken the view that building lines generally speaking are antagonistic to public interest and they refuse to enforce them.

Mr. Sprague rather made light of this question of grades. It seems to me excessive grades are always bad. It is not enough to say that the power of modern vehicles is sufficient to negotiate them, for it is done at a corresponding expenditure of power. A 5% grade will take double the power that a level grade will take. Then, too, there is the problem of maintenance. The maintenance cost of a steep grade is higher than that of a level street. And then there is the greater danger. If we had a proper census of all the accidents occurring on city streets a large percentage of the bad places where the accidents occur would be found on grades where vehicles had gotten beyond control.

So much for features of design. Features of cost have been spoken of and our Allegheny County system of Viewers. I believe this system of Viewers is a good thing, but it is unfortunate that the Boards of Viewers are constructed as they are. Three men are appointed by the Court, and the Chairman of the Board must be a lawyer. In my experience with Viewers I do not recall

that there was ever an engineer, or an architect, or even a practical building contractor upon the Board of Viewers. Yet these men determine how much it will cost a man to put his property in the same relation to a new grade of the street as it was to the old grade. Our Boards of Viewers should be composed of practical men capable of judging these problems in a practical way.

I am glad Mr. Sprague has taken a reasonable stand on the question of excess condemnation. Nearly all writers start in with the idea that every time the City condemns property in excess of its actual needs it will be sure to make money. As a matter of fact there is nothing so difficult to predicate as future values of real estate. What would happen to the City if it were to condemn property and then lose money on it? We have in our own city a case where the School Board made three separate purchases of property for high school purposes and in each one of those investments lost money. In a neighboring city eight or ten years ago a fine boulevard was constructed 150 ft. wide. It stands today a magnificent evidence of city planning. But private development has not kept pace with municipal development. Private development along that boulevard is very insignificant as to quantity and as to quality rather indifferent. Suppose that city instead of initially shouldering the cost of the actual improvement had undertaken to shoulder the cost of several hundred thousand dollars worth of excess property, which would be still on its hands, the general loss would be much greater than it is today.

The manner of assessment for street pavement has always seemed to me inequitable. The general rule of the Boards of Viewers is that the abutting property shall pay the entire cost of the pavement. When it comes to the boroughs of Allegheny County the borough itself, as a general rule, pays one-third of the cost and the owner two-thirds. In the City of Philadelphia, at least a few years ago, the City paid for the paving of street intersections. Each one of these plans seems more equitable than the rule of placing the entire cost upon the abutting property owner. For after all there is a city advantage in a paved street as well as a private advantage. Mr. Sprague stated that there could not be two assessments for paving, and that repaving must always be charged as a municipal expenditure. I never could

see any good reason for this; after a pavement has worn out and the abutting property owner has received all the advantage of that why should he not pay at least a certain amount toward he expense of repaving?

Mr. K. H. Talbot:* A word concerning the equitable distribution of cost of paving may not be out of place at this time. It is probable that a 20 or 22 foot pavement is sufficiently wide for residential streets without car tracks. This width must be materially increased where car tracks are included. Taking therefore as a basis for our argument a residential street 20 feet in width, it is evident that any increase in width results from one of the following causes:

1. Street car tracks.
2. Demand of traffic over the street to another section of the boro or city.
3. Growth of the district adjoining which was not foreseen at the time of laying out the streets.
4. Appearance.

The first three are conditions beyond the control of the abutting property owner, while the fourth will depend on local conditions. It would, therefore, appear that the community at large was responsible for and interested in any width of pavement greater than 20 feet. The railroad company assumes its portion of the expense when its tracks are on the street, thereby relieving abutting property owners of that portion of the cost. Should not, therefore, the community at large assume any cost of an improvement wider than the minimum which might be fixed by the planning commission, whether this be 20 or 30 feet, and the cost of standard width be assessed against the abutting property? It is incorrcet in theory and not equitable to penalize a property owner for living on a through route by demanding that he build a pavement two to three times as wide as his neighbor who lives on a street with just as many advantages but where the traffic does not demand so wide a pavement. Following out this same line of thought, it is evident that the life of the street will depend

*Division Engineer, Inspection and Information Bureau, Universal Portland Cement Co., Pittsburgh, Pa.

upon the character of traffic received. A large proportion of the traffic, except on dead-end streets, neither originates nor terminates on the pavement. The community at large benefits by the pavement, and it is, therefore, right and proper that they should assume the burden of maintenance and reconstruction.

The one thing that stands out above all others in my experience with road and street paving is the demand for drainage. A striking example of the effect of good drainage on the success of a road is found in the Thoms Run and Oakdale road in Allegheny County. The greater portion of this was carefully drained. Studies were made of causes for mud holes, wet weather springs and seepage from the side which might result in slips or in difficulty in holding a ditch. The ground water from the hillside cut off by French drains and tile was carried across the road in pipes or culverts. On the last half mile the drainage was not so carefully watched, with the result that the slabs have shown some longitudinal cracking. Many of the failures of brick, asphalt and concrete pavements can be traced to improper drainage, resulting in heaving of the soil or readjustment of the subgrade.

Water can get into a subgrade only from two directions, horizontally and vertically. Vertically it can come only from the top of the pavement or as surface water from the hillside or abutting property. Ditches and paved gutters easily take care of such a condition carrying the water to inlets where it can be taken away by storm water sewers. But the water that comes in horizontally must be taken care of by tile drains, French drains or sewer pipe. It is important that the water be caught before it reaches the pavement in order that the subgrade may be kept dry. As ground water, under Allegheny County conditions, appears either at the intersection of the grade with impervious strata overlain by water bearing strata, or from the sides, horizontal and transverse drains will take the water from the subgrade before it does any damage, providing care is taken in locating these drains at the time the work is in progress.

The use of a sub-base under sidewalks has been mentioned. In many cities and boroughs the sub-base is little more than a reservoir to hold water. Seldom do we see a good steam cinder or gravel used, but usually ashes. These in time disintegrate, do not

give uniform support to the slab, and the result is settlement combined with heaving due to the freezing of the water in the sub-base. It is better to place a tile on the upper side of the walk connecting it with the storm water sewer than to use a sub-base with no outlet. If a sub-base is used it must be connected with a storm water sewer at frequent intervals to make sure that the water is carried away.

The practice in Pennsylvania of allowing the property owner to place his own sidewalk results in poor construction and improper drainage. The City of Pittsburgh has done well to accept the one course concrete sidewalk and many other cities and boroughs would find their work much more satisfactory if they would follow this practice. The one course walk results in a uniform slab which is not porous, has uniform strength and in which there is no danger of the separation of the top from the base.

Based on a study of concrete roads and streets covering a period of five years, and after carefully inspecting many jobs in that time, I cannot agree with Mr. Sprague that the durability and wearing qualities of this type are as yet undetermined. The history of concrete pavement dates back to 1893-94, when the City of Bellefontaine placed concrete streets around the four streets of the Courthouse Square. Claire A. Inskeep, City Engineer of that city, in a letter under date of November 10, 1915, gives the following as their experience:

"Our city, in 1893 and 1894, constructed about 7300 square yards of concrete pavement around the public square. A strip 10 feet wide and 220 feet long on the west side of Main Street was built in 1892. Horses have used this latter strip almost continually for the past twenty-three years. These were among the first if not the first concrete street pavements constructed in the United States.

"They were built in blocks 5 feet square having a thickness of 6 inches. The bottom 4 inches, to use the language of the specifications, was of 'one part best Portland cement, equal to the Buckeye Portland cement, to four parts clean sharp sand and gravel in which the proportion of the sand is about one-half that of the gravel.' The top 2 inches was composed of 'equal parts of the same Portland cement first used and coarse sand and gravel sifted to the size of a pea.'

"Buckeye Portland cement, a local product, was used. The sand and gravel was obtained from local banks.

"The 5-foot blocks above mentioned were laid so that the joints between them were at right angles and parallel to the center line of the streets.

"In the light of twenty years experience it is plain that a mistake was made in placing these blocks in this manner. Had the longitudinal joints been eliminated it is the opinion of the writer that no repairs would have been necessary to this date. Under existing conditions, the cost for repairs in the past seven years has been $173.88. There is one year previous to this record in which repairs were made but for which the writer has been unable to obtain any figures. All repairs to date have been made along these longitudinal joints.

"By repairing some of these longitudinal joints which have worn badly, these streets could be put in as good condition as the day they were opened for traffic. The body of the blocks is in excellent condition. The only deleterious wear on the streets has been along the longitudinal joints, and this after being subjected to the heaviest traffic of a town of 8,000 inhabitants for a period of more than twenty years.

"The city has just completed the construction of about 6 600 square yards of alley paving in which we expect to eliminate nearly all if not all of the objections of the older pavement."

The design of these pavements was not in accordance with what is considered as best practice today, but the success of the pavement speaks for the permanency of this type.

F. P. Wilson, City Engineer of Mason City, Iowa, has had experience with this type of construction since 1909. In a letter under date of March 16, 1916, he states:

"All work has been two-course, composed of a 5-inch base, consisting of one part cement, two parts sand and five parts limestone, and a 2-inch wearing surface, consisting of one part cement and two parts coarse, clean granite sand. The pavements vary from 30 to 46 feet in width, with transverse expansion joints 25 feet apart in the first three years' work, but in 1912, 1913 and 1914 we made our expansion joints 37½ feet apart, and protected the edges of the joints with a softened steel plate to prevent the breaking down of the concrete at this point.

"The following shows the square yards and the years they were laid:

Year 1909	6,000 square yards
Year 1910	20,000 square yards
Year 1911	46,400 square yards
Year 1912	50,000 square yards
Year 1913	27,000 square yards
Year 1914	100 square yards
Year 1915	20,566 square yards

"The pavements laid in 1909 are in a downtown district where the traffic is heavy and constant and at this time they are in first class condition. The 1910, 1911 and 1912 work was laid on main thoroughfares, residence streets and in the downtown district. The construction work of 1913, 1914 and 1915 was laid on heavy traffic streets. We have spent on the maintenance of about 165,912 square yards of concrete streets, $1,734.40 since we began this kind of construction.

"On some of our concrete streets we have street car tracks, and we pave between the rails and one foot outside thereof with concrete paving, this paving being designed for street car track construction, and costing the street railway company $1.75 per square yard. Up to date this city has constructed 10.3 miles of concrete streets, all two-course work, 7 inches in thickness.

"I consider a concrete pavement, constructed honestly in an up-to-date manner with good cement, sand and a hard gravel or stone, in the same class with any first class pavement, on account of its first cost, its durability, cleanliness and cheapness to repair and maintain.

"Many a concrete pavement failure is caused by dishonesty, faulty workmanship, or inexperienced men and poor materials. The majority of concrete failures are known to have been caused by the aforesaid features.

"Property owners and citizens, as a rule, look very favorably upon concrete streets when they are properly and honestly constructed.

"March 13, this city let contracts for 43,000 square yards of reinforced concrete paving. All cement paving constructed in 1915 had reinforcement in its construction and all this year's work will have the same construction, as experience has taught us that a preventive is better than a cure, and warrants the use of a proper reinforcement."

Other cities in the Middle West have used concrete for a number of years, and the results justify the belief of engineers that they are an economical type of construction.

Coming nearer home we might mention the pavements at Parkersburg and Charleston, W. Va., and at Cleveland and Dayton, O. Two pavements built in 1914, one on East Twenty-first

Street and the other on East Eighty-ninth Street, Cleveland, are subjected to extremely heavy traffic. The traffic on these two pavements is not the same, however. East Twenty-first Street is outlet to Euclid Avenue for a manufacturing district, while East Eighty-ninth Street is a very heavily traveled automobile thoroughfare. These pavements are in perfect condition today, showing no evidences of wear. So satisfactory are they that Cleveland will build more of this type during this year. Chicago has many miles of concrete pavements, but three or four streets built since 1913 are of particular interest because of the excessive traffic to which they are subjected. East Twenty-first Street, built in 1913, is a street over which all the traffic from three large mercantile warehouses passes. This pavement when last examined was in perfect condition. The Soo Terminal in Chicago has concrete pavement along their loading platforms, as has also the yards of the Baltimore & Ohio, the latter piece of work being placed in 1916. Another interesting piece of work is the driveway built in 1903 along the American Steel & Wire Company warehouse in the City of Chicago, which has been subjected to steel-tired traffic for fourteen years and is today in excellent shape. We are apt to feel at times that country roads are not subjected to the same density of traffic as our city streets. However, reference should be made at this time to Michigan Avenue, just outside of Detroit, which was built in 1909 and which has carried a tremendous traffic. The amount of concrete paving in the United States has increased more rapidly than has any other type of construction in the last five years. It is economical from point of first cost, low in maintenance, has a long life, and in my estimation deserves a place higher in the table than given by Mr. Sprague.

It has been suggested that it is hard to make an opening in a concrete pavement and obtain a first-class surface when replacing it. This, however, does not seem to be borne out by the experience of other cities. The concrete is cut out, and in doing this allowed to extend about three inches from the side of the curb. After the repairs have been made to the sub-surface structure the concrete is replaced to the elevation of the reinforcement, the reinforcing for the patch put in place and tied to the old material, and the sur-

facing put on. A barricade is placed around the patch for from two to three weeks and street then thrown open to traffic.

Mr. Edward E. Duff, Jr.:* May I ask one or two questions with reference to the height of the curb in relation to the street. We occasionally have a combination of property owners on residential streets, who, for aesthetic reasons, desire the curb to be left off the street altogether, putting some sort of abutment against the paving material to keep it from sliding off the foundation. Whether or not that is advisable is a question.

Another point is in connection with the height of the curb with reference to the crown of the street, whether or not the curb should be the same height as the crown or above it or below it—considering the question on streets where both curbs are of the same height and also on streets whether one curb is higher than the other, due to the topography of the ground.

Mr. N. S. Sprague: In the improvement of suburban districts, where the streets partake more of the character of roads or driveways, it is sometimes the practice to either omit the curb entirely or to use a special curb section, generally combined with a concrete gutter, the depth of the curb being shallow. This method of construction has not been used in the City of Pittsburgh for the reason that the law requires a street to be graded to the ordinance grade and any property owner abutting thereon could defend against paying assessment until the law had been complied with, with respect to the improvement. The function of the curb is to provide a water way, lateral support for the pavement, safety for pedestrians and protection of the sidewalk area. On streets where the development is strictly commercial, the curb is frequently omitted, as also upon ways, and where the curb is omitted the concrete foundation is turned up at the ends sufficiently to provide lateral support for the pavement.

The relative height of the curb with respect to the crown of the street depends entirely upon the width of the street and the character of the pavement. The gutter depth is usually six inches, and the height of the crown is fixed by the character of the pave-

*Borough Engineer, Borough of Sewickley, Sewickley, Pa.

ment and the width of the street, so that the crown may be either above or below the top of the curb. Where one curb is higher than the other, the crown of the pavement may not be in the center of the street, but is fixed with reference to the transverse slopes, and if the difference in elevation is sufficient the crown of the street may well be above the top of the curb.

Mr. Edward E. Duff, Jr.: The question is whether or not we should put the curb above the elevation of the crown, so that if the street is completely filled with water it would all be flooded, or whether the crown should be higher, so that in case of flood it would overflow on the sidewalks and leave the center of the street above the water.

Mr. N. S. Sprague: Since a street is very seldom flooded from curb to curb, the question as to whether the crown is above or below the top of the curb is immaterial. Under all ordinary conditions, the water-way afforded by the gutters is more than ample to carry off all drainage. On the other hand, it would not be advisable, in anticipation of such flooding, to place the crown of the street higher than the curb, so as to throw the drainage upon the sidewalk, since this would deflect the water where it would do the most harm.

Mr. C. M. Reppert:* Sidewalk construction, while not involving the varied problems presented by street pavements, is of great importance in the development of city streets. The subject has already been discussed with particular reference to drainage, which is perhaps the most important feature and the one that is most frequently neglected. The writer believes that, under most conditions, a sub-base should be provided under sidewalks, and if attempted at all, the provisions made should be ample both for collection and discharge. In this connection a description of the sidewalk construction in use in this city may be of interest.

A complete system of sub-drainage is required. This consists of a sub-base of porous material under the sidewalk for the purpose of collecting the seepage, and a longitudinal drain of

*Division Engineer, Bureau of Engineering, City of Pittsburgh.

ample size laid under the curb, commonly known as the curb drain. This latter drain not only serves to convey the drainage from the sidewalk sub-base, but also as the sub-drain for the sub-grade of the street pavement. The sub-base of the sidewalk conforms to the following specification:

"The foundation course shall be five inches in depth and shall consist of clean gravel or broken stone, and shall be free from dust, dirt and other foreign matter. The material shall range in size from two and one-half to three-eighths inches. The foundation course shall be thoroughly rammed or rolled and then leveled off so as to be parallel with the finished surface of the sidewalk. Cinder or clinker, where used in the foundation, shall be of acceptable material approved by the Director, of the sizes hereinabove specified for gravel or broken stone, and shall be free from dust, fine ash or other objectionable or foreign matter.

"When the sidewalk pavement does not extend to the curb, cross drains 10 inches by 12 inches in section shall be provided at intervals of 25 feet so as to connect the foundation of the sidewalk with the broken stone curb drain. These cross drains shall be filled with stone or gravel which will pass a three-inch screen."

The curb drain is 18 inches in width and extends 12 inches below the bottom of the curb.

Two-course sidewalk construction is gradually being displaced in favor of the one-course construction. Up to a few years ago the practice in this city was to lay a two-course sidewalk, consisting of a sub-course of four inches of concrete, over which was spread a wearing surface of cement and Ligonier screenings, the wearing surface being two inches in thickness. The surface was generally brought to a very smooth finish. The principal objections to this type of construction were slipperiness and liability of the separation of the wearing surface from the sub-course owing either to improper construction or expansion. The two-course construction has been discarded in this city, and the present method of laying a five-inch slab composed of 1-2-4 concrete and finishing same with a wooden float appears to be far superior.

Mr. E. A. Beck:† In line with the question concerning the failure of the Frankstown Avenue pavement, Mr. Sprague's opinion as to the practicability of resurfacing worn-out brick with

†Borough Manager, Borough of Edgeworth, Edgeworth, Pa.

asphaltic concrete or any of the other types of bituminous surface would be of interest, particularly as the various bituminous material promoters are advocating this method of treatment.

Mr. J. P. Leaf:* One thing struck me as an engineer doing borough work. The laws ought to be changed so that the damages to abutting property shall be assessed before the borough does the work. The most unattractive properties before the streets are graded, if they are cut down or filled up, seem to increase greatly in value. Oftentimes it is a great burden to the borough that it does not know the amount of damages before the improvement is made. In many cases the benefits should equal the damages. There is another thing that struck me many times. I have been unfortunate enough to be on the Board of Permanent Viewers of Beaver County and I really think the business of this county is carried on to too great an extent by lawyers. There does not seem to be anything that a lawyer is not capable of doing,—art commission work, or president of a railroad designing street car systems when he does not know whether it is an overhead trolley system or a horse car when he starts in, and yet he is perfectly competent to be the president and draw the salary. We have entirely too many lawyers in the Legislature. The lawyers are not a majority of the people or any great proportion of the professions, yet there is always a majority of lawyers in the Legislature. The engineers of the Society pride themselves that they don't take part in politics; at the same time they are really responsible for many improvements and advances in this country. What we ought to do is to get into practical politics and let our engineering societies take the position they are entitled to occupy.

Mr. J. M. Larned:† I have listened with much interest to Mr. Sprague's very able and complete paper upon the design and improvement of city streets, but do not find myself in accord with the sub-division of this paper entitled "Street Railway Track Construction."

*Municipal Engineer, Rochester, Pa.

†Engineer of Maintenance of Way, Pittsburgh Railways Company.

A track upon a street under the best of conditions is a detriment to the pavement, and the pavement is distinctly a detriment to the track, but since a street railway track is a necessity upon some of the streets of a city, the problem is to produce a combined structure which will give the best possible results, and since the street railway structure with its pavement takes up about 50 percent of the ordinary street, the railway company is vitally interested in the correct solution of the problem.

Accepted practice of railroad engineering, with respect to track foundation, should apply to a street railway track as well, since it has, as a track, the same function to perform, namely, the distribution of a rolling load upon two lines of rails, through these rails and the ties and the foundation, uniformly over the sub-grade. Few, if any, railroad engineers today will consider the use of a concrete slab under the ties in place of rock ballast as the principal distributor of the load. The essential features of a track are the rails and their fastenings, the ties, the ballast and drainage. In open track work the drainage is accomplished by slightly sloping the sub-grade, under the ballast, outwardly to the side ditches. Anything superimposed upon such a track, such as road and street crossings and station platforms, are a distinct detriment in that they interfere with the drainage.

In a street railway track the pavement on the flanks cuts off all drainage from the sub-grade, and since a greater depth of foundation is required for the track than for the pavement, the track foundation is necessarily constructed in a trench in the center of the street in which surface water will collect.

A properly constructed pavement will in a measure keep the surface water from this trench, and the drainage of the sub-grade may be accomplished by the installation of a tile drain at the center of the trench about 12 inches below it. The sub-grade or trench should be sloped towards the center at the rate of about two inches in ten feet.

The Street Railway Association, after collecting data and discussing the problem for some six or eight years, has finally settled upon a ballasted track in preference to one having a concrete slab under the ties, and has adopted the former as "recommended practice." Not all street railway engineers are in favor of this,

however, some prefer the concrete slab; nor do statistics show that most large cities favor the concrete slab under the ties; some that do are certainly governed by local and exceptional conditions of sub-soil, which would seem to render some such unusual construction necessary.

Street pavements as formerly constructed upon a bed or foundation of gravel have not proved adequate for present-day requirements, and are now generally being reconstructed, as they wear out, upon a slab of concrete six inches thick laid directly upon the sub-grade.

So also street railway tracks as formerly constructed, with light rails upon ties spaced from two to three feet centers, sometimes laid directly upon the sub-grade, and sometimes upon from three to six inches of ballast, and paved upon a gravel bed, have been found too light to take care of the increased weight of equipment and the more exacting demands of vehicular traffic. Such tracks will also have to be reconstructed as they wear out in a more substantial manner.

The modern pavement, where there are no tracks, is carried upon a concrete slab six inches thick laid directly upon the sub-grade. The modern pavement as recommended by the Street Railway Association for the street railway area is carried upon alternate slabs of concrete between the ties 8 inches thick, 14 inches wide, and of wood (the ties) 6 inches thick, 8 inches wide, which combined pavement base is superimposed upon 8 inches, in depth, of rock ballast, and is quite as strong for sustaining vehicular traffic as is the pavement base used elsewhere upon the street, and quite as smooth a pavement can be laid and maintained upon it.

The modern track as constructed at present in this city is built of rail weighing 134 lbs. per yard, instead of 90 lbs. as formerly, upon ties spaced two feet centers and upon eight inches of rock ballast, instead of none, or from three to six inches as formerly, and having a tile drain in the trench connected to the city sewers at frequent intervals. The additional weight of the rail alone will distribute the rolling road over nearly twice the area of sub-grade as was formerly the case.

The objections to the use of a concrete slab under the ties is that while it lasts it makes a more rigid track and noisy; the jar produced by cars passing over it breaks up this slab in time and there is no way of repairing it. In track reconstruction the work is materially slowed down by the necessity of removing the old slab and waiting for the new to set properly, which is a decided inconvenience to the public and to property owners fronting upon the improvement, and also materially affects the regularity of street car service.

The life of a track is said to be the life of the joint, which in a measure is correct, and when the joints become loose and begin to pound and wear out, the pavement is soon affected thereby. This condition is not in any way improved by the use of a concrete slab; on the contrary, it will be accelerated, and the pounding at the joint will break the slab, if it does not break sooner.

Owing to the great expense of repairing a street railway track, due to the presence of the pavement as part of the structure, the tracks should be as stable and substantial as practicable; but there should not be introduced into the structure an element which will make these repairs certainly much more expensive unless it is proven without question that this element will materially increase the life of the structure and cause fewer repairs to be made.

Mr. Sprague is at much pains to explain in the beginning of his paper that upon the trained engineer should devolve the duty of deciding the character of pavement best suited for each particular street. In that part of his paper relating to street railway tracks he rightly says that the street railway area is subject to more intensive traffic, and then again, but wrongly, that as a general proposition there is no reason why the type of pavement in the railway area should not conform to that used elsewhere upon the street. Is not intensity of traffic one of the governing conditions as to type? Certain types of pavement, such as brick, asphalt and macadam, are eminently unfitted for use within the street railway area.

Since the rails divide and form a line of cleavage lengthwise of the street, through any type of pavement, is there any good reason why a more suitable and substantial pavement cannot be

selected for the street railway area, where the traffic is more intense, even though these easily worn-out types of pavement should be selected for use elsewhere upon the street?

Mr. N. S. Sprague:* The question asked by Mr. Neilson relates to a practice, and was referred to by Mr. Beck, which requires a review of past experience. Some twenty-five or thirty years ago a practice was inaugurated in the cities of Brooklyn and New York of using the old cobble and block-stone pavements as a foundation for sheet asphalt, instead of removing the old pavements and laying a new concrete foundation. This practice was evidently inspired by a desire to economize in the first cost of the pavement structure, believing that a satisfactory asphalt pavement could be secured by laying it on the old foundation.

It is fair to assume that these old block and cobble-stone pavements were in a bad state of disrepair, with holes and depressions and a generally uneven surface. To provide a uniform cross section for the foundation with the old paving material required the readjustment and partial relaying of the old paving stone. This was done in the City of Brooklyn, where the old pavement was cobble-stone, by repaving the holes and depressions, and in the City of New York, where the pavement was block stone, by removing the block stone and laying them on their sides. The economy in first cost of this practice was a considerable item, but the cost of subsequent maintenance more than offset the saving effected by using the old pavement as a foundation for the new.

The failure of the block and cobble-stone pavements in the first instance was unquestionably due to the fact that they were laid on a yielding and unstable foundation, consisting of gravel, but it was assumed that no further settlement would occur, and on this theory the asphalt pavements were laid. It was soon realized, however, when the authorities were confronted with repairs to pavements laid upon old foundations, occasioned by street openings, that they were confronted with a difficult problem.

There is another objection to the laying of bituminous pavements over brick or block stone, and this is the difficulty of securing cohesion between the surface of the stone (which is usually

*Author's closure.

worn smooth) and the wearing surface. This objection could be overcome, to a certain extent, if the joints were raked out to a sufficient depth to secure a good bond between the stone and the surface layer. There is also the further objection of being unable to secure proper compression of the asphalt when rolled on a yielding foundation. Certainly this type of construction is impracticable for city streets, subject to frequent openings for the installation of surface and sub-surface structures.

To answer Mr. Neilson's question with respect to the failure of the pavement laid on Frankstown Avenue extension, by Allegheny County, it is my opinion that the failure of this pavement was due to the lack of cohesion between the asphaltic concrete wearing surface and the block stone. The destruction of this pavement was also hastened by large quantities of water which flow over it and wash or lift the wearing surface off its foundation.

Mr. Blum's discussion of those features of the paper which relate to city planning and the creation of zones is both timely and worthy of careful consideration. Quite recently there has been forcefully impressed upon many people who have invested in beautiful homes the necessity for some authority to be empowered to prevent the depreciation of their properties and destroy their value for residence purposes by the invasion of factories and other structures for commercial purposes. There are some cities which are already provided with laws regulating this matter, and such laws would certainly be beneficial for this community.

The most difficult work of a city planning commission consists of the replanning of such sections of the various cities as were laid out years ago and where relief must be afforded to meet present-day requirements of travel and traffic. The proper location, width and grade of new streets in the outlying districts and the co-ordination of these streets with adjoining civil divisions is not usually a difficult or expensive matter and can usually be solved in a satisfactory manner.

I am inclined to disagree with Mr. Blum as to the advisability of the creation of an Allegheny County Planning Commission, under the control of the county, for the reason that the chief problems relating to planning would be within the city limits and

the problems outside the city would be of relatively less importance than those within the city. I do believe, however, that the City Planning Commission should have control and supervision over the location of such highways in the county as connect with and form a part of through lines of communication through the city.

With respect to street grades, I fear that Mr. Blum has misconstrued the thought which I intended to convey. Certainly no one familiar with the grades of streets in the City of Pittsburgh would advocate the adoption of anything but the minimum grade consistent with physical, economic and practical considerations.

It is, however, a fact that the change in motive power for loads hauled upon city streets has operated to reduce the first cost of a street and to permit of the use of smooth pavements to an extent which would not be advisable for horse-drawn traffic. The importance of the grade factor has been reduced, and while it is true that the expenditure of energy increases with the grade, yet as an economic and practical proposition the financial advantage gained by the adoption of a steeper grade, within reasonable limitations, more than offsets the cost of the additional energy required thereby. In other words, cases arise where a decision must be made between a five and seven percent grade, and where the interest on the additional cost of the investment for the lesser grade exceeds the cost of energy expended in negotiating the seven percent grade, the decision from an economic standpoint would be in favor of the seven percent grade. Moreover, the additional burden placed upon the motor car is insignificant when compared to that which would be placed upon horse-drawn vehicles, the former having the reserve energy available and the latter not.

I do not wish to be understood as an advocate of steep grades, but simply to point out the fact that there are certain conditions and problems which arise in the fixing of a grade upon a city street where it is good engineering to increase the grade and place the additional burden upon traffic rather than incur excessive cost to keep the grade at a minimum.

I differ from Mr. Blum as to maintenance cost of city streets having steep grades. The maintenance on level streets is greater than on streets having a considerable grade. Streets with a grade

are more or less self-cleansing, and in the case of asphalt pavements the water is quickly shed without danger of disintegration of the pavement.

In connection with the composition of the Board of Viewers, it is suggested that one of the viewers be an engineer, architect or building contractor. The function of the Board of Viewers is similar to that of a judge, who hears the testimony on each side of the case presented to him and from such evidence determines what the damages or benefits shall be. The qualifications, therefore, for this position, under the present laws, would seem to require the exercise of good judgment, rather than technical and scientific training.

The laws relating to assessment in different localities have been drawn to meet the requirements of local and physical conditions. In small communities the abutting property, as a general rule, is of insufficient value to carry the burden of the entire cost of a street improvement. This is especially true if the street is wide and considerable grading necessary, and it is for this reason that small communities assume a large percentage of the cost of the improvement and distribute it over the entire community. In large cities, where property is more valuable, the abutting property can well afford in most cases to carry the burden of the entire assessment. The laws relating to the matter of assessments in this city give the viewers latitude to determine the amount of the assessment for street improvements according to the benefit derived therefrom. As to the question of assessing the cost of repaving against the abutting property owners, such a practice would be most unjust and inequitable, for the reason that the pavements are not worn out by the property owners, but by the general public. On the principal streets of a city abutting property would be severely taxed for street repaving, while on the residence and less important streets the cost for repaving and the frequency of same would be greatly reduced.

Mr. Larned's contention relative to the modern pavement, as recommended by the Street Railway Association for the railway area, that such construction is quite as strong for sustaining vehicular traffic as the pavement base (concrete) used elsewhere upon the street, is not sustained in actual practice and experience.

This form of track construction was used quite extensively in this city for paving certain main thoroughfares, particularly Frankstown Avenue, Smithfield Street, North Highland Avenue and certain other streets of the city, the only difference in construction being six inches of ballast under the ties, instead of eight inches as used at the present time. The pavement in the railway area upon these streets has settled, together with the tracks, and it is evident that this type of foundation for both tracks and paving is inadequate to support the superimposed load.

Mr. Larned's objection to the use of a concrete foundation under the ties, on the theory that it will crack and disintegrate, due to impact, is a good argument for either increasing the thickness of the concrete foundation or reinforcing same. If the impact of the load will cause the disintegration of a concrete foundation, the question may well be asked as to the effect of this impact upon a yielding and unstable foundation of broken stone or ballast.

The selection of the proper type of pavement for a street with car tracks, under Mr. Larned's theory, would require two different types of pavement, one type within the railway area and one type outside, because of the more intense traffic in the railway area. If it is determined, after careful consideration, that an asphalt pavement best meets the average needs of traffic for a certain street, there is no reason why the same type of pavement should not be laid within the railway area. The question is not whether the intensity of traffic is greater in the railway area or outside thereof, but what type of pavement is best suited to meet the requirements of traffic for the whole street.

COTTON ROPE FOR POWER TRANSMISSION

By J. Melville Alison*

I wish to express my indebtedness to the Executive of the Engineers' Society of Western Pennsylvania for this opportunity of addressing you on the subject of cotton ropes for power transmission and of presenting a few phases of a subject which are given close attention and consideration by engineers engaged in this class of work in England.

I feel that I am entitled to say that with us this subject is given closer technical and practical consideration than it has hitherto been given on this side, particularly from the ropemakers' standpoint.

My particular issue, however, is to engage your interest, first in the rope drive and second in cotton as a material for ropes for power purposes, as against manila or any other material, and further, in a scientifically constructed rope for this special application.

The outstanding features in comparing the practice in England and in America in this matter may be briefly stated as follows:

1. Cotton has entirely supplanted any other material for transmission work in England—manila is of the dim and distant past.

2. The ropemaker is consulted as to plant layouts, speeds, sheave diameters, centers, grooving, etc., and his opinion is deferred to.

3. Guarantees of maintenance are required and given in almost all installations.

4. The manila and steel rope manufacturers employ cotton ropes for transmitting their power.

5. The efficiency and longevity of cotton ropes have commanded the employment of this material in the manufacture of transmission ropes.

*Engineer, William Kenyon & Sons, Dukinfield, Manchester, England.

My main argument, therefore, might be that while it is admitted on this side that the rope drive was originally adopted from English practice, the engineering faculty have not come along astride with us.

It is necessary for me to satisfy you at the outset why cotton should dominate other materials. Longevity and a higher factor of efficiency need be my assurance to you. The longest life we have is of ropes installed in September, 1878 (in 24-hour day work), and still doing service, but it is common to find cotton ropes doing night and day duty for periods of twenty years and over. A higher initial cost is readily overlooked. In rolling mill practice we get up to ten or more years for hot roll work, and fifteen or more in cold roll tin plate mills.

I do not propose to elaborate the subject but to keep to main facts or issues, and if possible stimulate a lively discussion, from which so often comes the enlightenment we seek.

In England possibly the rope drive is utilized much more freely than in America, but on the other hand, the installations here, are, in many instances, much larger than in England. It is difficult to comprehend why cotton ropes have not been more freely adopted in this progressive country, when we consider England is daily exporting large consignments to all parts of the world. In Canada many cases could be cited of firms, who, after experimenting, as it appeared to them, in replacing manila by cotton ropes, continued to employ the latter, irrespective of the higher initial cost.

I propose this evening to engage your attention in various features which must be reckoned with in rolling mill practice, and endeavor to show how better results may be obtained by observing what one might call first principles.

Cotton vs. Manila: In combating the question of cotton or manila for transmission ropes, one must not lay too much stress upon initial cost, for although cotton is dearer than manila, its superior *resilience, grip* and *groove impact* add so greatly to driving force that up to one-third more horsepower may be transmitted. Further, its prolonged life, being reckoned at approximately three to one, will reduce apparently excessive first charges to an insignificant item.

Tensile Strains: The tensile strain of a driving rope does not enter largely into the problem, else manila would undoubtedly hold the field, but its fibers are of so harsh and wiry a nature, that they do not take kindly to the successive twisting and bending operations, nor do they cling to the sheaves with the tenacity of the softer material. Having little natural resilience, the strands scrub one upon the other, setting up internal abrasion, which not only proves an inconstant quantity, but also invariably leads to repeated tightenings.

Three vs. Four (or more) Strand Ropes: Rope of three, four or even seven strands is sometimes employed, but since the contest lies mainly between the three and four strand, it will suffice if I endeavor to demonstrate the advantage held by the three strand over the four or any other construction.

Examining the section of a three strand rope, Fig. 1, we obtain an equilateral triangle by connecting the centers of each strand, demonstrating the triangulation of the strains, a principle adopted by all engineers in erecting angular constructions, such as bridges, etc. In a rope of this construction we have a trinity

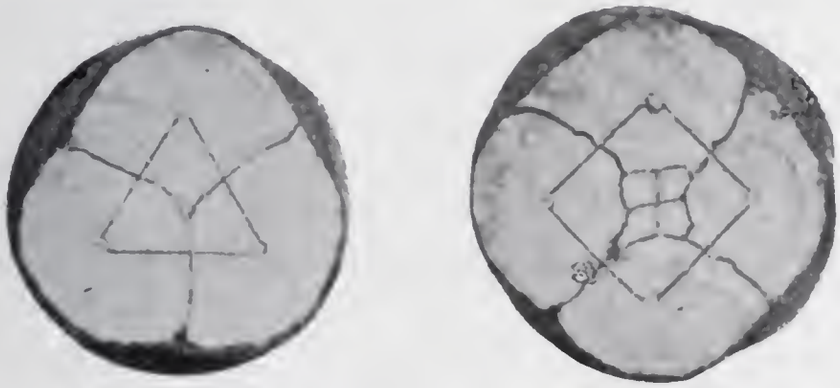

Fig. 1. Sections of Three and Four-Strand Ropes.

of elastic spirals, so supple that they will bend to and fro without disturbing their formation. With the four strand rope, adopting the same method of connecting the strand centers, we obtain a square and an illustration of the parallelogram of forces from the four centers. Again, the four strand rope cannot be constructed without a supporting core, and since it is indispensible to its construction, its collapse must mean the dislocation of the whole structure, and as the core represents only about one-fortieth of the area, it may be reasonably assumed that the superior

force exerted by the alternate contraction and extension of the spiral as the rope passes over the sheaves, must tend toward the breaking up of this core, the period of endurance being limited by its elasticity and the tension at which it is laid. This is what actually takes place.

Spiral Elongation: This will probably be the more readily grasped by referring to Fig 2 which shows a three and four

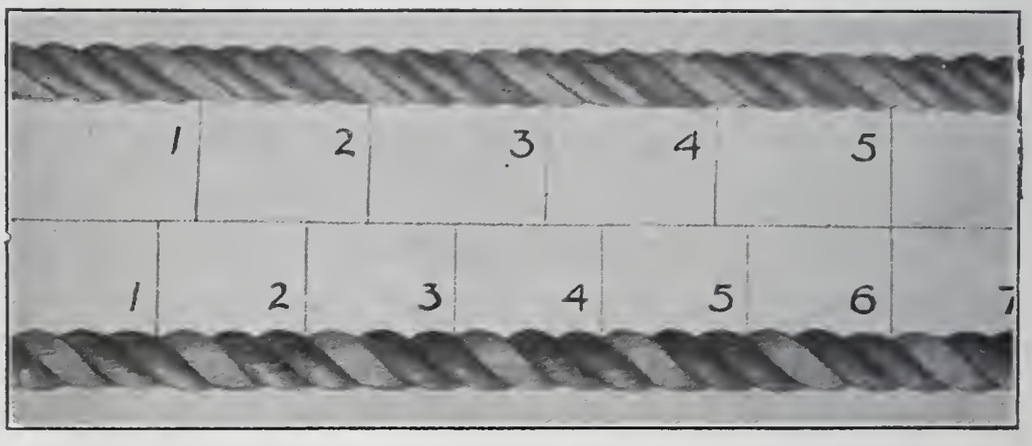

Fig. 2. Relative Elongation of Three and Four-Strand Ropes.

strand rope in parallel, with the turns of one strand indicated by the figured lines. Thus the turns of the three strand gradually gain upon the four in the proportion of one in five or in other words, six turns of the three strand occupy the space of five turns on the four strand, i. e., in ropes of the same thickness. The strand spiral of a seven strand rope is nearer the straight line, being almost double the length of a three strand rope. It will, therefore, be acceptable that the medium engaging the greatest number of turns should prove to be the most resilient and more capable of disposing of the shocks and stresses set up in rolling mill work than any other. Again, as affecting the bending capacity of the rope, another important difference is observable—only two strands appear between every turn of a three strand, while three occupy the spaces between every turn of a four strand.

Grooving: In laying out a groove it should always be borne in mind that a rope is to all intents and purposes an elastic wedge and reaches its highest driving capacity when it is pressed to the shape of the groove itself. This cuneiform ought, therefore, to be anticipated for if the sides of the groove are merely shown

as tangents to the circle, representing a given size of rope, and this is so with all American illustrations I have seen, then there is always the danger of making the groove too shallow so that when the compression takes place, and possibly after a short term of running, the rope is liable to find its way to the bottom of the groove, when gripping is considerably weakened and slipping takes place, the true indication of which is heated sheave rims. Grooves with curved sides have proved not only an impedance to driving force, but also a stimulus to destructive rolling action which is the very antithesis of good practice, and should, therefore, always be discouraged.

Hence, curves being disallowed, permit only the angular groove, and we contend that the rope should decide the angle of the groove and not the groove the rope.

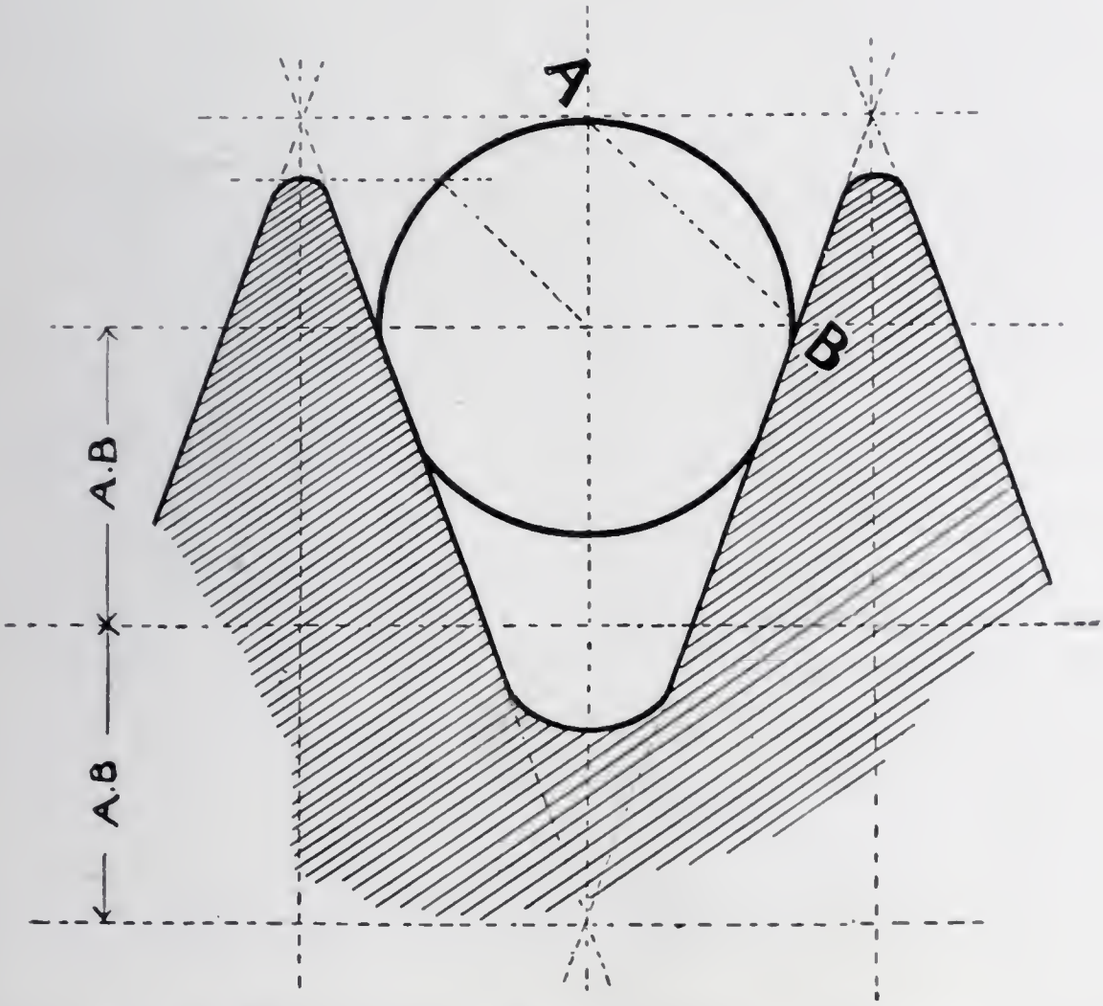

Fig. 3. Method of Laying Out Grooves in Sheaves.

Without use of the protractor, the groove demanded by a given size of rope, may be set out as shown in Fig. 3.

First set a circle of equal diameter to the rope, draw the vertical and horizontal center lines. The chord of the arc *AB* is then marked off. This becomes the unit of measurement and when laid off downward along the vertical line from the center of the circle, indicates the center of the curve of the bottom of the groove. Laid off a second time from this center, the apex of the inverted angle of the groove is determined. This angle always comes out at about 40 deg. whatever the size of the rope may be. Extend the lines of the angle through *BB*, cutting off segments of the circle on the way, until they intersect the upper horizontal line at *CC*, which points fix the radii of the mid-flanges. This groove may be taken as a standard for ropes over 1-inch diameter and also shows the approximate actual compression which takes place in a rope at work.

The value of good grooving cannot be too strongly advanced. A further great benefit to be obtained in successful transmission is by polishing the grooves. It is difficult to understand why the engineer has not seen to this being done here, since it must be a grievous fact to him to know that his second set of ropes will do better than his first, pointing to the fact that the first set are expected to polish the tool marks from the grooves.

Fixed or Revolving Ropes: It has been a matter of education in England to get the engineer to agree as to whether the fixed-wedged or revolving rope is the better driving medium. The wedged rope with its angular formation gains in groove contact over the revolving rope and contact means power. Further, the wedged rope cannot have the tendency to slip which the revolving rope would have, and also the life of the revolving rope is considerably reduced. The cause of ropes revolving is difficult to ascertain, but it is computed that the life of a rope is reduced by at least one-third when it revolves.

Ropes which are underworked will very often tend to revolve, a golden rule in rope transmission being that ropes like work to do.

Perhaps the most apt illustration of a wedge-shaped medium is the drive on a motorcycle, where a V-shaped belt is fitted to a V-groove, without, however, the belt reaching bottom, yet obtaining the greatest possible groove contact and impact.

Longevity: As to the life of cotton ropes much, of course, depends upon their size and the conditions under which they have to work. All things being equal, durability may be gauged by sectional area, and the most economical diameters range from 1½ in. to 1¾ in., more of the latter being used in England than any other size. For rolling mill work, however, it so often becomes a matter of sheave widths, that 2 in. ropes are generally used. A remarkable case of longevity may be mentioned of 24 cotton ropes 1¾ in. diameter employed to transmit 820 h.p. at a velocity of 4396 ft. direct from the engine fly wheel 28 ft. in diameter, in a Lancashire cotton mill. These were fixed in September, 1878, and are still running in 24-hour a day service, a period of over 38 years. Another set has been working 28 years, on an average of 20 hours per day, and appear little the worse for wear. The sample I show now, was removed from a drive after 19½ years service.

Such cases of longevity lead to the conclusion that fatigue of material due to constant activity does not readily manifest itself in well-made cotton ropes. Their quick recovery from driving strain is suggested as the cause, since they pull down on the working side and bulge out to their normal diameter, immediately upon passing to the idle or slack side of the drive.

English vs American System: There are advocates of both systems on this side of the Atlantic, but it is rather a pleasure and comforting to find that the engineers in this district are in agreement with us as to the best system, especially in rolling mill practice. I need, therefore, take up little time in arguing why we in England are satisfied that the multiple rope system is the better in all-round practice. Immunity from stoppage is the most important factor, since it is seldom that more than one rope gives way at a time. The offender may be laid aside to await a favorable opportunity for replacement. An admission made to me by one of the leading authorities of the American system was that while all his experiments had been made with manila rope he had the impression he could get still better results with a good cotton rope.

Short Centers: For evidence of the fact that by adding sufficient rope to make up any deficiency in contact, driving may be

sucessfully accomplished when sheaves are almost touching, we need only refer to the case of an engine in Scotland, Fig. 4, where spur gearing was removed and rope sheaves fixed on the same centers, permitting only a clearance of 8 in. between sheave rims. A load of 360 h.p. is comfortably transmitted with 16 ropes 1¾ in. diameter. At a mill in the north of France the sheaves are so close that a finger would scarcely pass between them.

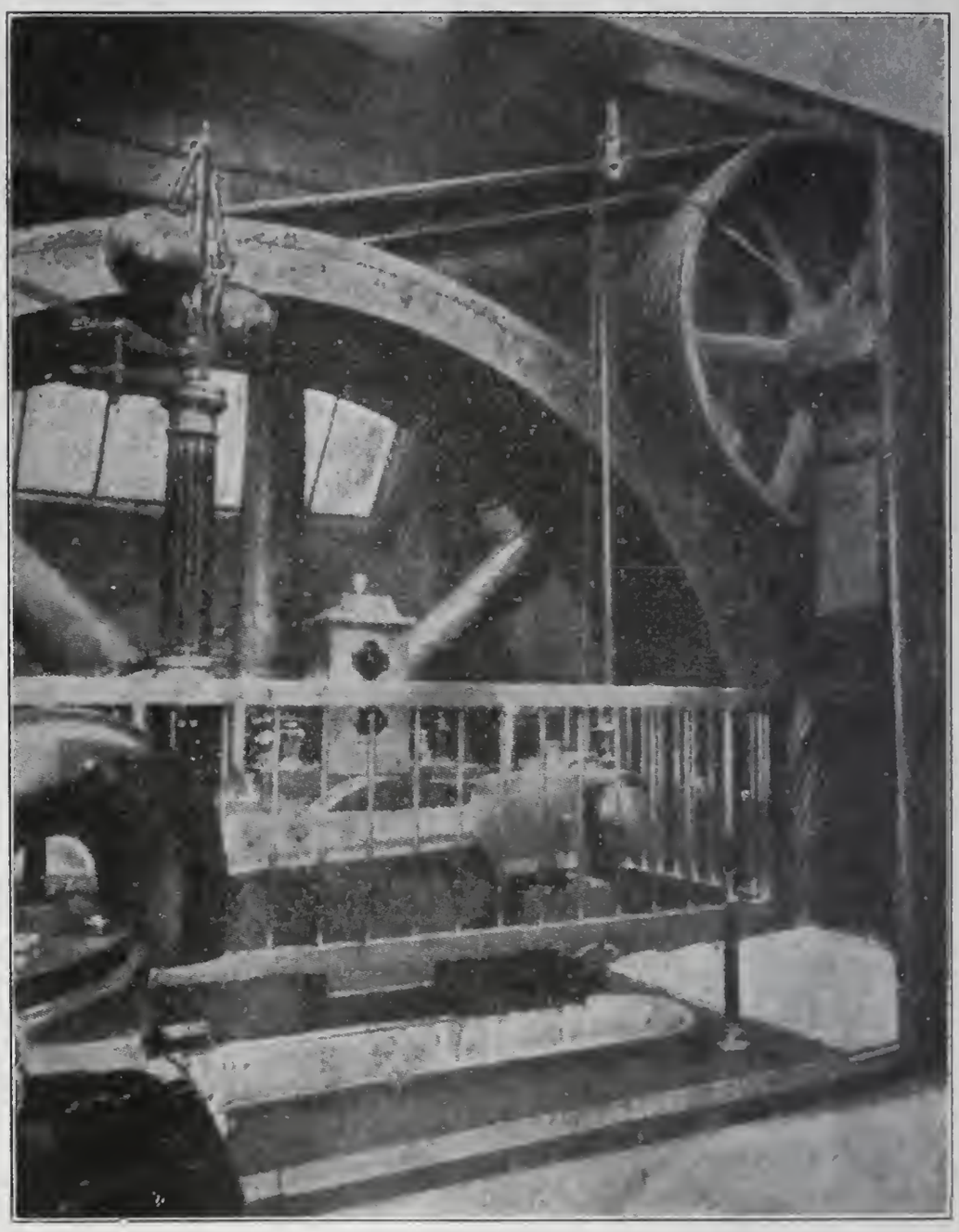

Fig. 4. Short Center Rope Drive.

At the present time a drive is being fitted for the Armstrong-Whitworth Company of Canada, at Montreal, in which the sheaves are 108 in. and 72 in. on a rolling mill plant, with only

15 ft. centers and grooves for 12 1¾ in. ropes. This drive is being fitted under guarantee of maintenance from the rope-makers, who originally were consulted on the scheme.

Over Roping: Over roping certainly retards efficiency. The fault sometimes manifests itself by the slack changing with the pulling side, and at other times by the ropes traveling across the grooves or even leaving the pulleys altogther. When such troubles arise it is best to remove one or several ropes if need be, without interfering with the splicings. Pass them over both pulleys and tie them well back to avoid revolving shafts. They can then be readily put back to work as the others give out. We have known instances where half the original number were taken off before satisfactory driving was obtained. This state of things frequently arises, even under fairly regular loads, when actual requirements come below the calculated power.

Over or Under Driving: While it is, and has been, generally accepted that the slack side of the drive should come on top, this position is not always obtainable, nor is it under all circumstances desirable. With an erratic or fluctuating load such as obtains in rolling mill practice, we recommend the slack to come on the bottom. The variable load of the mill tends to set up considerable oscillation in the ropes and if the slack is above, may cause the ropes to ride or even jump off the sheaves. On the other hand, if the slack is below, any tendency of the rope to wander from its appointed track is held very largely in check by the pull on the tight side, also gravity and the weight of rope will control the oscillations.

Rope Guard: If, however, ropes persist in wandering from their appointed track, we recommend the erection of a rope guard, in comb fashion, which should be placed approximately 10 percent off the centers away from the driven sheave. In rolling mill practice in England this is very freely adopted.

Sheave Diameters: Sheave diameters have a very important bearing upon the question and while in England the minimum standard is taken as 30 times the diameter of rope, in America 40 to 50 times is accepted. Here again cotton scores over manila, since its softness readily admits of superior bending properties which the native harshness of manila and almost entire absence

of resilience compel a higher minimum sheave diameter to which ropes of this material can be bent over. This power table is calculated upon an average contact arc of 170°.

Centrifugal Force: Groove impact also acts in opposition to centrifugal force, which has proved so potent a factor in belt driving, that whatever is done by way of compounding with narrower belts, adhesive dressings, or squeezing out the inevitable air-cushion, it will assert its retarding influence at a velocity fixed roughly at about 3000 feet per minute, when the power calculated on the basis of width must be discounted in proportion to the increase in speed.

As affecting the rope drive, however, many tables are compiled whereby a steady decrease of transmitted power over 4800 feet per minute is shown, until we find ropes at 7000 feet capable of transmitting only half the load of the same rope at 4800 feet.

While few cases of rope transmission exceed a velocity of 5000 feet, possibly because of the necessity for specially constructed sheaves, those of higher speeds totally disprove the theory of centrifugal detraction at the higher velocities, but rather reveal a larger ratio of increase than the advancing figures of Table No. 1 indicate. We have drives in England and France running at over 7000 feet per minute, and transmitting the higher calculated horsepower, but I think all are outdone by a drive which I encountered in Cleveland where the ropes are running at 7800 feet per minute as illustrated in Fig. 5. The driving sheave is 14 ft. 4 in. diam., making 168 rev. per min. with driven sheave 4 ft. 7 in. diam., and fitted with 19 2 in. ropes to transmit approximately 1400 h.p. The driven sheave only shows a 27½ times diameter of rope but is giving comparatively good service. This will prove a unique illustration to friends in England, but seems to leave us farther in the dark as to centrifugal force.

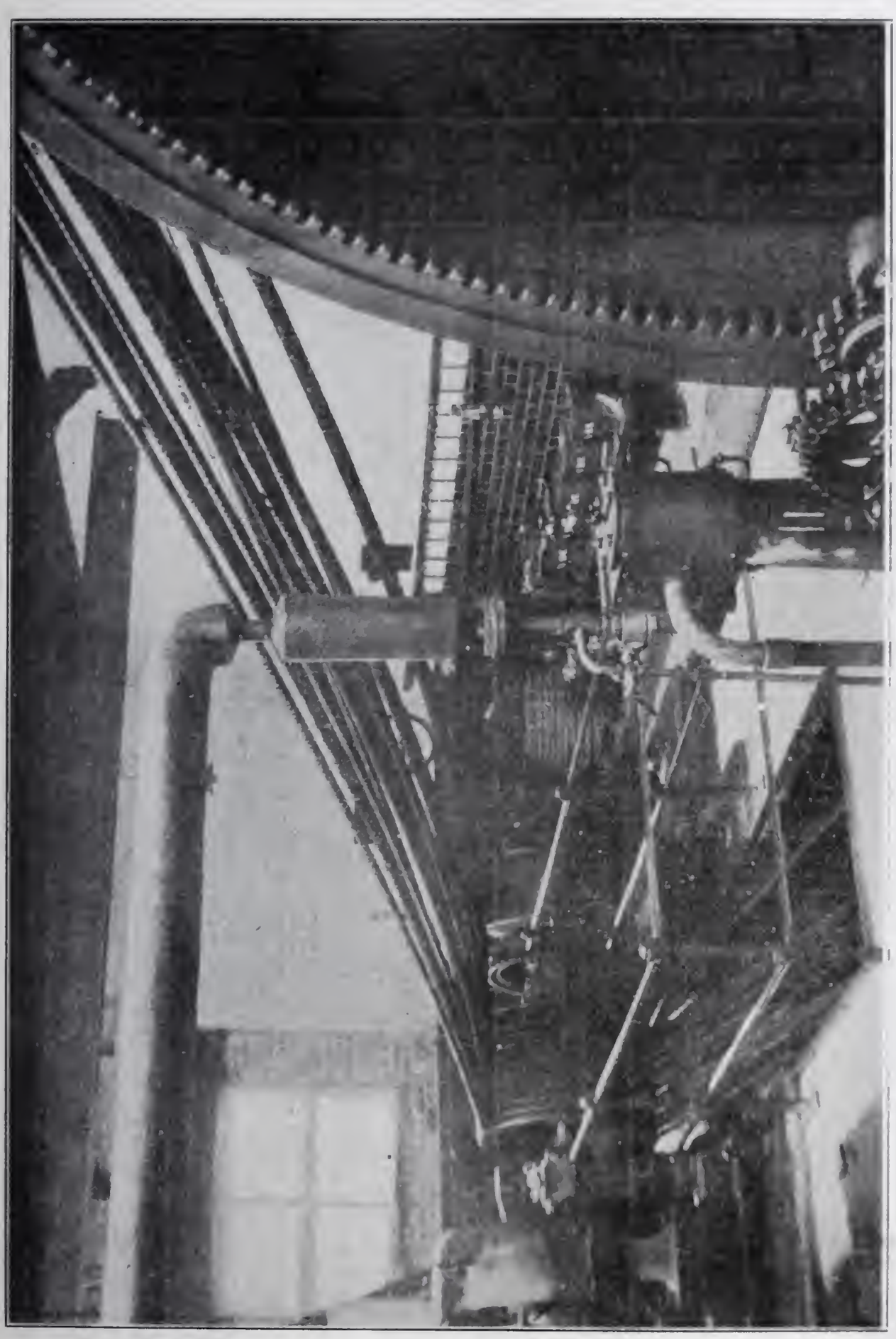

Fig. 5. High Speed Drive With Unusual Reduction.

TABLE No. 1

Table of Horsepowers Which Good Three-Strand Cotton Driving Ropes Will Transmit (Allowing a Good Margin of Safety), Running Upon Pulleys Not Less Than Thirty Times Their Respective Diameters.

Rope Dias.	1″	1⅛″	1¼″	1⅜″	1½″	1⅝″	1¾″	1⅞″	2″
Minimum diameter of smallest pulley	2′ 6″	2′ 10″	3′ 2″	3′ 5″	3′ 9″	4′ 1″	4′ 5″	4′ 9″	5′ 0″
Velocity in feet per minute									
1000	3.3	4.1	5.1	6.1	7.4	8.6	10.	11.5	13.
1100	3.6	4.5	5.6	6.7	8.1	9.5	11.	12.6	14.3
1200	3.9	4.9	6.1	7.3	8.9	10.3	12.	13.8	15.6
1300	4.2	5.3	6.6	8.0	9.7	11.2	13.	14.9	16.9
1400	4.6	5.7	7.1	8.6	10.4	12.	14.	16.	18.3
1500	4.9	6.1	7.6	9.2	11.1	12.9	15.	17.2	19.6
1600	5.2	6.6	8.1	9.8	11.9	13.8	16.	18.4	20.9
1700	5.5	7.	8.6	10.4	12.6	14.6	17.	19.5	22.2
1800	5.8	7.4	9.1	11.	13.4	15.5	18.	20.7	23.5
1900	6.2	7.8	9.6	11.6	14.1	16.3	19.	21.8	24.8
2000	6.5	8.2	10.1	12.2	14.9	17.2	20.	22.9	26.1
2100	6.8	8.6	10.6	12.8	15.6	18.1	21.	24.1	27.4
2200	7.1	9.	11.1	13.4	16.3	18.9	22.	25.3	28.7
2300	7.5	9.5	11.6	14.	17.1	19.8	23.	26.4	30.
2400	7.8	9.9	12.1	14.7	17.8	20.7	24.	27.6	31.3
2500	8.1	10.3	12.6	15.3	18.5	21.5	25.	28.7	32.6
2600	8.4	10.7	13.1	15.9	19.2	22.4	26.	29.9	33.9
2700	8.7	11.1	13.6	16.5	20.	23.3	27.	31.	35.2
2800	9.1	11.5	14.1	17.1	20.8	24.1	28.	32.2	36.5
2900	9.4	11.9	14.6	17.7	21.5	25.	29.	33.3	37.8
3000	9.7	12.3	15.1	18.3	22.3	25.8	30.	34.5	39.1
3100	10.	12.7	15.6	18.9	23.	26.7	31.	35.6	40.4
3200	10.4	13.2	16.2	19.6	23.8	27.6	32.	36.8	41.8
3300	10.7	13.6	16.7	20.2	24.6	28.4	33.	37.9	43.1
3400	11.	14.	17.2	20.8	25.3	29.3	34.	39.1	44.4
3500	11.3	14.4	17.7	21.4	26.	30.1	35.	40.2	45.7
3600	11.7	14.8	18.2	22.	26.7	31.	36.	41.4	47.
3700	12.	15.2	18.7	22.6	27.5	31.9	37.	42.5	48.3
3800	12.3	15.6	19.2	23.2	28.2	32.7	38.	43.7	49.6
3900	12.6	16.	19.7	23.8	29.	33.6	39.	44.8	50.9
4000	13.	16.4	20.2	24.5	29.7	34.5	40.	46.	52.2
4100	13.3	16.9	20.7	25.1	30.4	35.3	41.	47.1	53.5
4200	13.6	17.3	21.2	25.7	31.2	36.2	42.	48.3	54.8
4300	13.9	17.7	21.7	26.3	31.9	37.1	43.	49.4	56.1
4400	14.3	18.1	22.2	26.9	32.7	37.9	44.	50.6	57.4
4500	14.6	18.5	22.7	27.5	33.4	38.8	45.	51.7	58.7
4600	14.9	18.9	23.2	28.1	34.2	39.6	46.	52.9	60.
4700	15.2	19.3	23.7	28.7	34.9	40.5	47.	54.	61.3
4800	15.6	19.8	24.2	29.4	35.7	41.4	48.	55.2	62.7
4900	15.9	20.2	24.7	30.	36.4	42.2	49.	56.3	64.
5000	16.2	20.6	25.3	30.6	37.1	43.1	50.	57.5	65.3
5100	16.5	21.	25.8	31.2	37.9	43.9	51.	58.6	66.6
5200	16.9	21.4	26.3	31.8	38.6	44.8	52.	59.8	67.9
5300	17.2	21.8	26.8	32.4	39.4	45.7	53.	60.9	69.2
5400	17.5	22.2	27.3	33.	40.1	46.5	54.	62.1	70.5
5500	17.8	22.6	27.8	33.6	40.9	47.4	55.	63.2	71.8
5600	18.2	23.1	28.3	34.3	41.6	48.3	56.	64.4	73.1
5700	18.5	23.5	28.8	34.9	42.3	49.1	57.	65.5	74.4
5800	18.8	23.9	29.3	35.5	43.1	50.	58.	66.7	75.7
5900	19.1	24.3	29.8	36.1	43.8	50.8	59.	67.8	77.
6000	19.5	24.7	30.3	36.7	44.6	51.7	60.	69.	78.3
6100	19.8	25.1	30.8	37.3	45.3	52.6	61.	70.1	79.6
6200	20.1	25.5	31.3	37.9	46.1	53.4	62.	71.3	80.9
6300	20.4	25.9	31.8	38.5	46.8	54.3	63.	72.4	82.2
6400	20.8	26.4	32.4	39.2	47.6	55.2	64.	73.6	83.6
6500	21.1	26.8	32.9	39.8	48.3	56.	65.	74.7	84.9
6600	21.4	27.2	33.4	40.4	49.	56.9	66.	75.9	86.2
6700	21.7	27.6	33.9	41.	49.8	57.7	67.	77.	87.5
6800	22.1	28.	34.4	41.6	50.5	58.5	68.	78.2	88.8
6900	22.4	28.4	34.9	42.2	51.3	59.4	69.	79.3	90.1
7000	22.7	28.8	35.4	42.8	52.	60.3	70.	80.5	91.4

Effect of Moisture: Cotton ropes are also less susceptible to atmospheric changes than manila for the reason that moisture more readily evaporates through the fibers, thus rendering them practically immune from internal mildew which so often is apparent in a discarded manila rope.

Arc of Contact With Slack Above: Before dismissing the consideration of pulley diameters, it will be well to notice another phase of the same question, viz., that which deals with the arc of contact.

It needs but little reasoning to prove that rope contact reaches its maximum when both pulleys are equal in size, but when un-

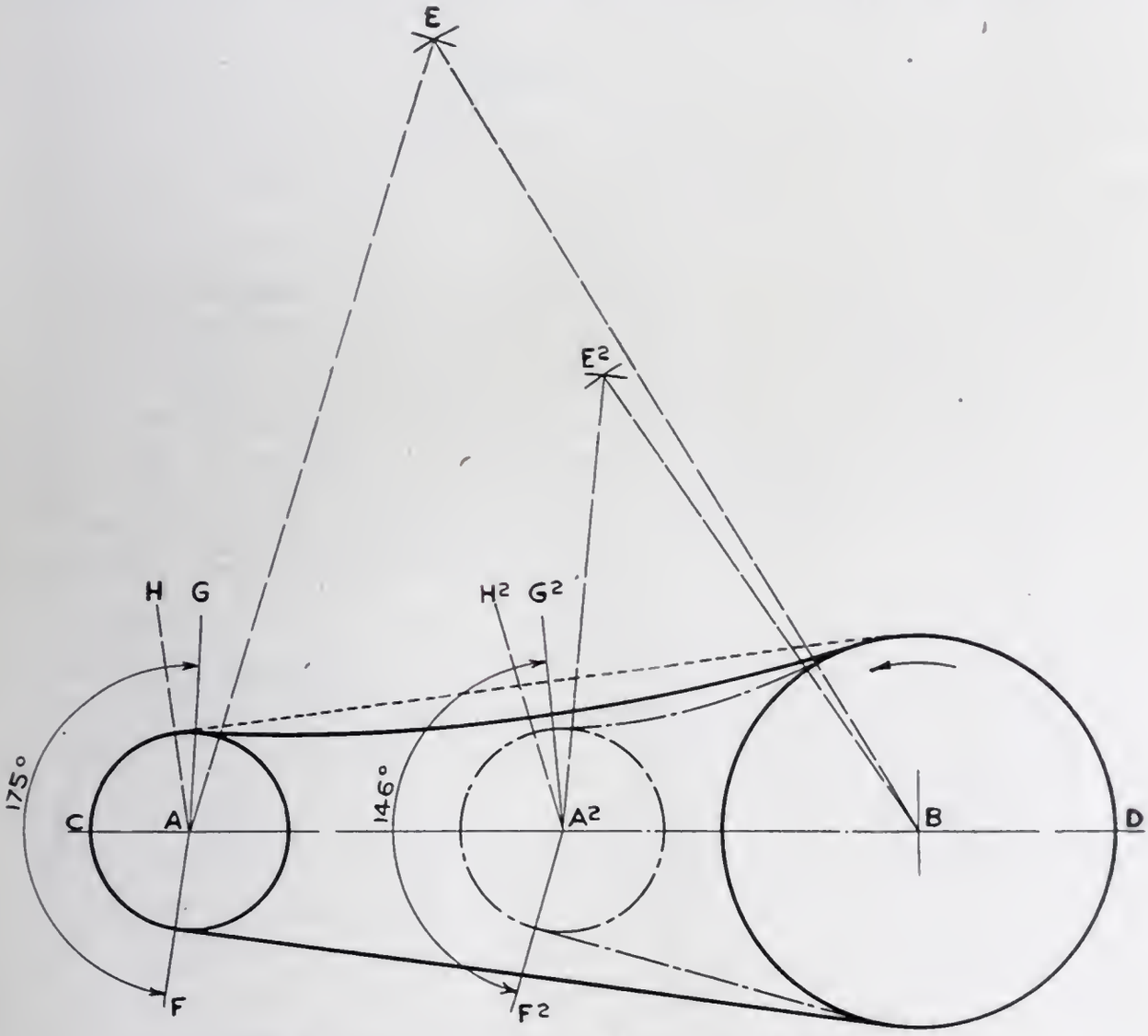

Fig. 6. Arc of Contact With Slack Above.

equal the utmost quantity realizable is that carried by the smallest pulley whether it be driver or driven. The full value of this assessment, however, also depends upon the center distances, as

may be readily inferred by reference to the geometrical formula, Fig. 6.

First, measure the length of the two radii crossing at *E* from *A* to *D* off point *B*, and from *B* to *C* off point *A*. A line carried through the center at *A* gives *FE*. The line *AH* is gained by taking the vertical of the top pulley line, while equally dividing the angle *AHE* by *C* produces the angle *FAG*, which represents an arc of 175 deg. By bringing the small circle to the second position and repeating the same formula the arc FAG_2 is constructed and gives only 146 degrees.

Arc of Contact With Slack Below: The formula is somewhat altered in order to ascertain the arc of contact for any dis-

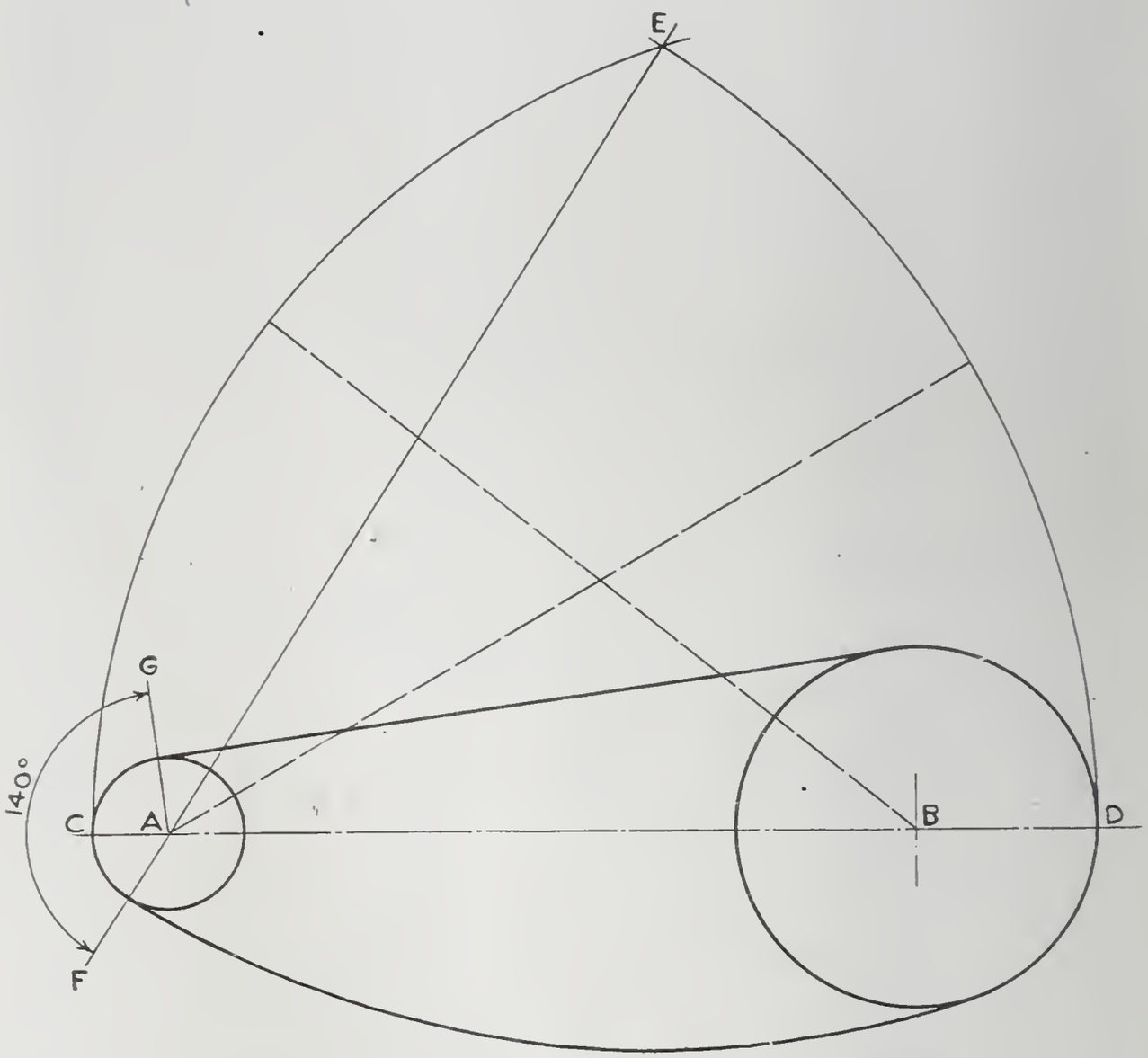

Fig. 7. Arc of Contact With Slack Below.

tance of centers with slack below. Therefore, mark the distance from *A* to *D* and *B* to *C* at *E*, which gives the curve radius for

the under slack and constructs the angle FAG by the lines EF and AG, the latter vertical with the upper line over top of circle, thus declaring an angle of 140 degrees. (See Fig. 7.)

This formula will be found useful for ascertaining the depths of rope pits, by what may be termed the ultimate slack.

Generally speaking, it is advisable to discount the transmitting value of the ropes by the amount of difference between the actual arc of contact and 170 degrees, upon which Table No. 1 is based, but when the pulleys are comparatively large, these differences may be neglected.

While an effective working tension of about 200 lb. per sq. in. of rope section may be calculated upon, this figure may, in some cases, be profitably exceeded. To quote an instance, a large sheet rolling mill, when first installed, was driven by 26 ropes 2 in. diameter by electric motors and to provide against a peak load of 1500 b.h.p. was helped by the momentum of two heavy fly wheels making 35 r.p.m. or a peripheral velocity of 3516 ft. Tests conducted under working conditions revealed a high rate of resistance, which diminished as the load rapidly advanced from 150 to 900 h.p. This was considered due to over roping at the lower power. Six of the ropes were accordingly removed. Running with only 20 ropes lowered their average friction from (say) 5.8 to less than 3 percent, brought about steadier transmission, and materially improved the output.

Inter-Stranded Cotton Driving Rope: Allowing the claims I have put forward in favor of the three-strand rope, without further advocacy of the general principle involved, it may be logically contended that if such a rope possesses constant equality throughout, if the yarns are equal in counts, number, tensile strength and tension, each one following its appointed track without deviation, and are all of the best procurable quality, then we have arrived at a point bordering on perfection in the making of driving ropes, and their manufacture and application has been a close study for over 50 years.

This rope is made expressly for power transmission, from the finest selected American yarns. Each of the three strands is made up of a succession of sheaths or layers of yarns, which may be peeled off until the center thread is reached. The rope

is machine built, under hydraulic tension, so that a perfect and combined tension is secured to each thread, from the moment these threads are led to the machine. The crinkling effect to

Fig. 8. Even Lay in Interstranded Rope and Crinkling in Ordinary Rope.

be found more or less in all rope made by the ordinary method is thereby eliminated. (See Fig 8.)

As previously mentioned, the triangulation of strains is secured in three strand ropes and in this particular rope is maintained to the individual threads. In effect this construction means that with the rope at work each thread takes its relative proportion of duty and again in wearing only the external layer will show abrasion, leaving the next layer intact. This feature is of significant value, since I could quote to you many instances, where say a 1¾ in. rope, after years of work is reduced in diameter, but has still sufficient life left in it to enable it to be removed to a drive where ropes of about 1½ in. diameter may be in use.

There is no limit to length in constructing this rope other than may be controlled by convenience in transportation.

Splicing: All that I have said relative to the making of cotton driving ropes and their application to transmission of power would be of little value without some reference to the question of splicing.

This is so important to the well-being of the system in general that rather than have installations spoiled by indifferent workmanship expert splicing mechanics, properly trained to this duty, are sent out from England to all parts of the world.

We have experimented with different devices of metal and other couplings, with a view to dispensing with splicing, but nothing has yet been found, which, in England, would be considered against the long splice. This is usually calculated at about 82 times the diameter of the rope. I wish to offer you some comparative examples of rolling mill work, with relation to the life obtained from cotton rope in England.

An installation with which I was personally associated was fitted with 18 ropes 2 in. diameter on a driving sheave 10 ft. 6 in. diameter at 110 r.p.m., and a driven sheave 30 ft. diameter at 38.15 r.p.m. With this peripheral speed of 3636 ft. per minute the ropes were calculated to do 846 h.p., allowing a fair margin of safety, and leaving a balance of 154 h.p., or about 15 percent, upon a momentary peak load of 1000 h.p. to be carried through by the momentum of the fly wheel. This was on a 6 stand hot roll tin plate mill. Here the ropes lasted 7 years,

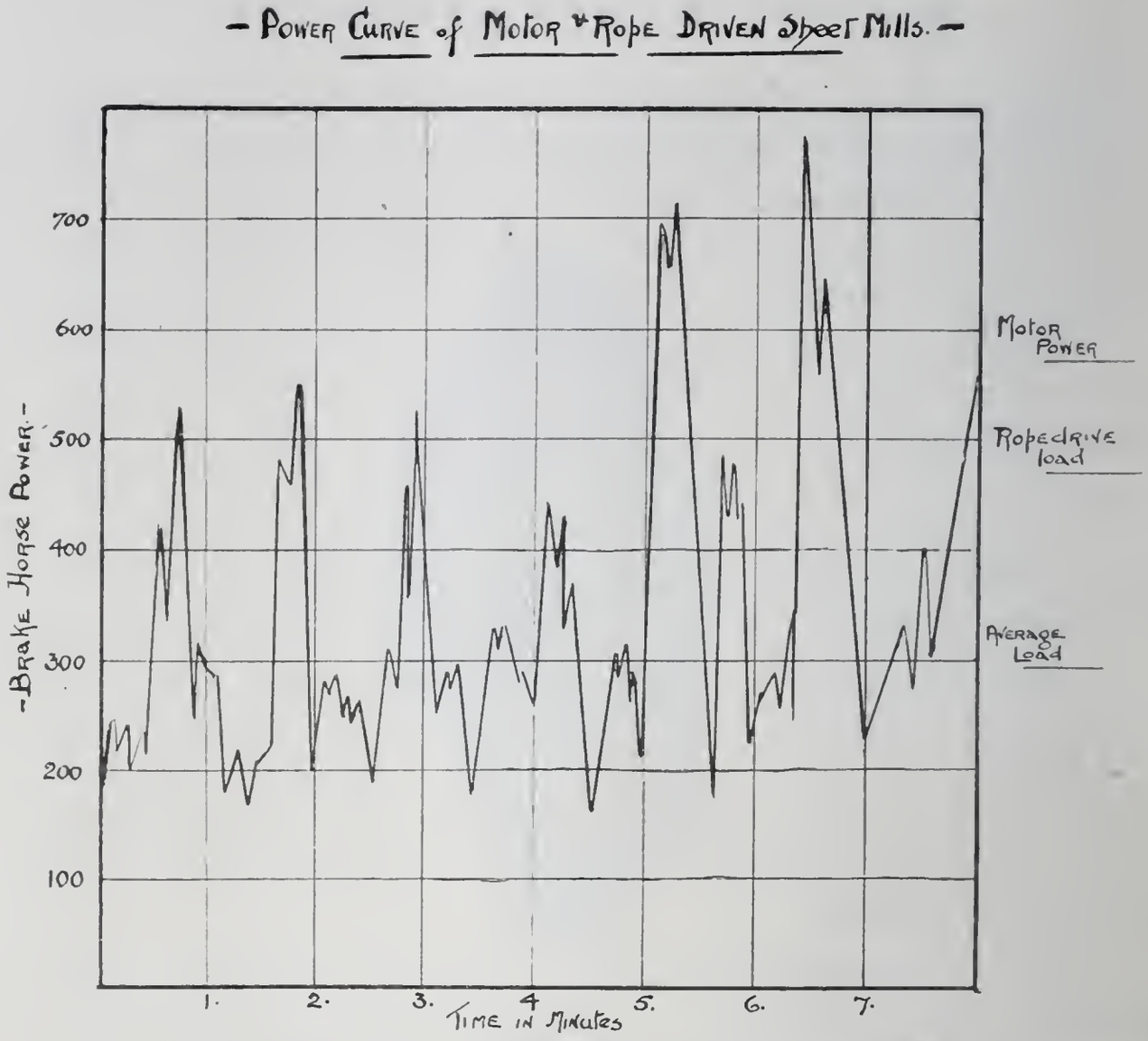

Fig. 9. Power Curve for Motor-Driven Sheet Mills.

Fig. 10. Mill Sheave, 36 Ft. Diam., 150 Tons, in Hot Roll Drive.

but underwent various hardships, such as standing in a flooded pit for 2 weeks, and were also subject to some very inferior take-up splicing because the proprietor would not face a few dollars expense to have the work done by an expert. Fig. 9 is a power curve for a drive of this character.

This layout need be reckoned favorable to long rope life, although it was due to the instigation of the ropemakers that the number of ropes was increased from 14 to 18, after careful calculation of the relative average and peak loads.

Fig. 10 is an illustration of the mill pulley in another hot sheet mill drive, where 16 2 in. ropes are employed to drive a 6-stand plant. The engine is of the "Uniflow" type with driving sheave 8 ft. diameter at about 145 r.p.m. and a mill sheave

Fig. 11. Motor-Driven Sheet Mills.

36 ft. diameter and weighing 150 tons, making about 33 r.p.m. While this drive has given fairly good rope life, in that the present ropes are on as installed in September, 1910, the over run of the heavy mill wheel appears to cause a very heavy lashing of the ropes at starting and stopping.

In 1908 a sheet mill drive, shown in Fig. 11, was put down in the north of England by a firm who had considerable experience in continental practice. In this 25 2 in. ropes were fitted to drive a load varying from 750 to 1000 h.p. and at times reaching even more than this, at a peripheral speed of 3400 ft. with sheaves 6 ft. and 30 ft. diameter respectively. The original ropes are still doing duty and more recently the plant has been duplicated.

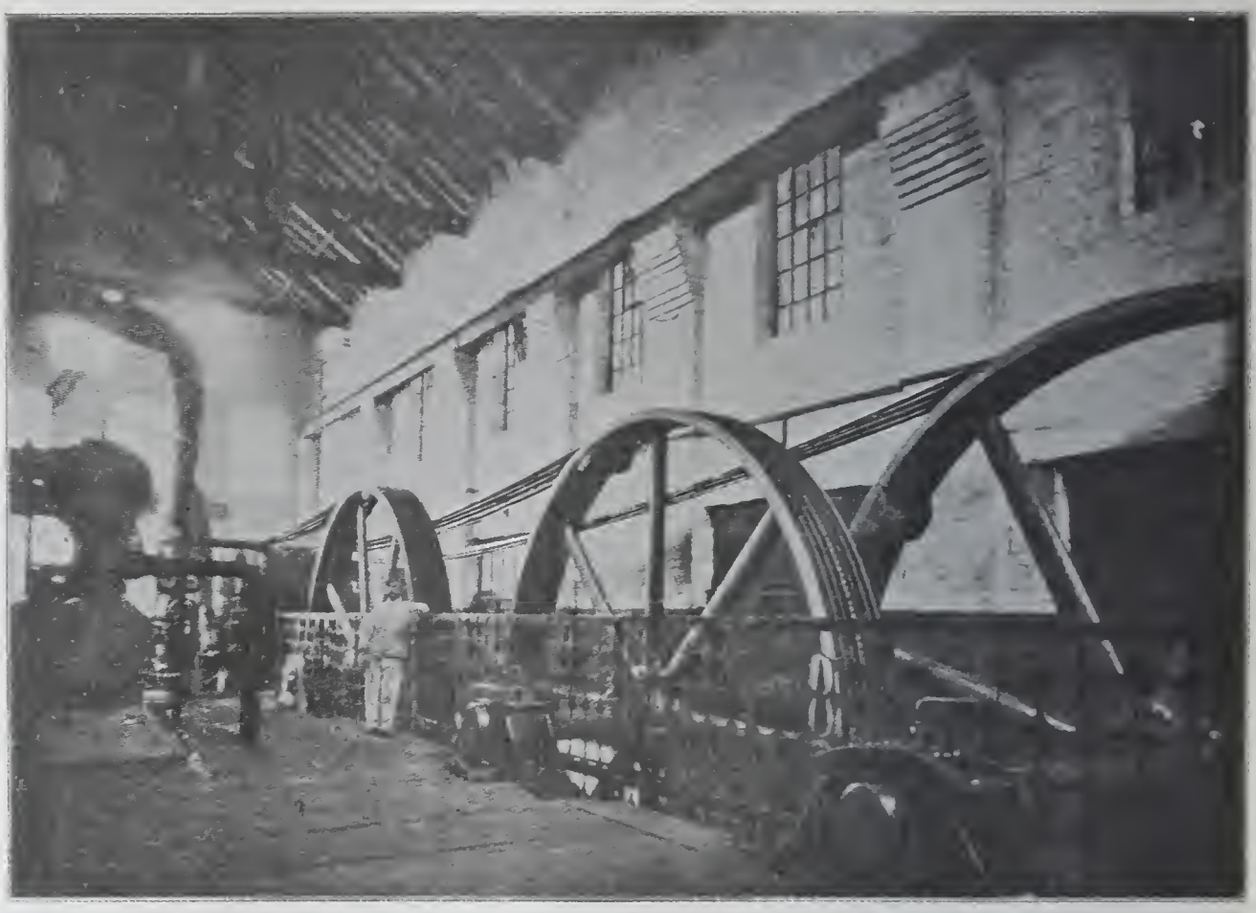

Fig. 12. Three-Train Cold Roll Drive.

Fig. 12 is of a 3-train cold roll drive, each with 6 2 in. ropes, running from a driving sheave 10 ft. diameter weighing 15 tons at 80 r.p.m. on to driven sheaves of 16 ft. at centers 34 ft., 43 ft. 6 in. and 59 ft. 6 in. There are a large number of drives similar to this in England and Wales, and all may be said to give excellent rope service, varying from 10 to 15 years.

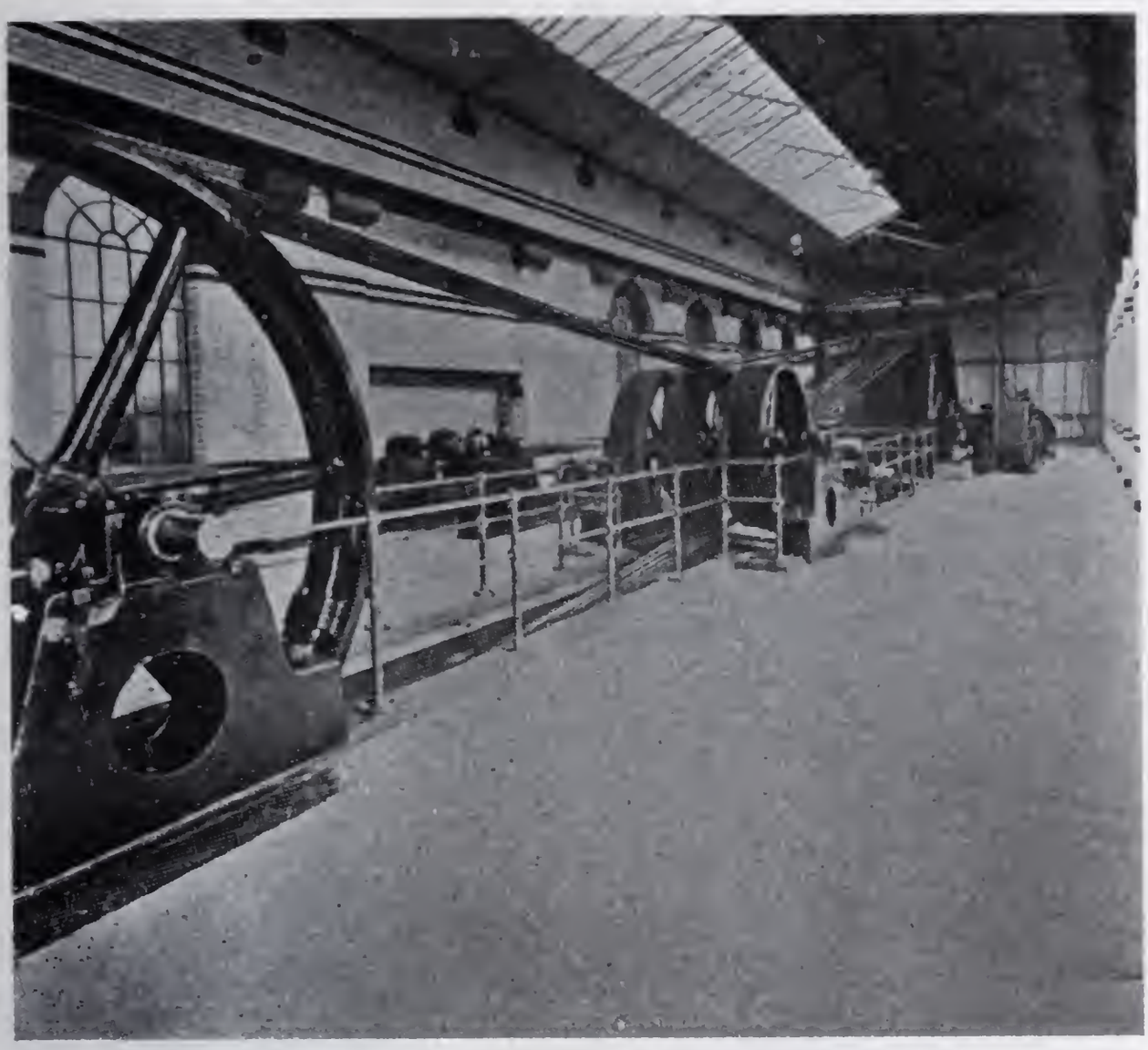

Fig. 13. Wire Rod Mill Drive.

Another opinion held by one of our largest consulting engineers in England with steel mill practice, is that the rope driven mill will produce a better finished sheet than will the gear mill.

I am sorry to say that one of the first rope driven sheet mills to be installed in South Wales is not to be reckoned as giving ideal conditions for rope. Thanks to a misguided erection foreman, the shafts were laid down out of line and to-day No. 1 rope on driving sheave runs into No. 2 groove. The driving sheave, 8 ft. diameter, is grooved for 24 2 in. ropes, with driven sheave 28 ft. diameter. Considerable difficulty was experienced in keeping the ropes in their grooves, no doubt due to the faulty alignment, so the number was reduced to 16 and a rope guard fitted, and the present set has been on now about 7 years. Here they are driving a 5-stand plant, with 2 on one side and 3 on the other side of the mill wheel.

In another drive six 1¾ in. ropes are employed to drive two 15 in. sets and one 7 in. set of rolls. The different rolls are mounted as they may be required for manufacturing tin bars, light rails, merchant bars, etc. The driving sheave is 18 ft. at 100 r.p.m. and the driven 6 ft. diameter. The duty is represented at 350 b.h.p. from a 400 h.p. engine. This drive is very satisfactory and gives a long rope life.

Fig. 13 is a rope driven wire drawing mill at William Cooke's Mills in Sheffield, which has proved a highly successful installation.

The rope speed would be about 5000 ft. per minute, with 1¾ in. ropes driving forward to two lines of rolls, with the engine shaft taking the other. About two years ago, I had to inspect the drives, the engineer being afraid one set of ropes was giving way. The whole of the drives was doing splendidly in spite of their seven years continuous night and day service. The ropes on one drive were slack enough to be taken up, and this I advised, but the engineer explained they were on very urgent war orders and could not afford any stoppage and it was ultimately agreed to have a spare lot for the drive sent forward and immediately he had trouble, he could have splicers sent on the job at once, and obviate any possible stoppage. So far as I know these ropes have not yet been fitted.

There are many features of the rope drive upon which I have not touched, since they are not in direct application to rolling mill practice, but a number of slides which I have with me will shortly illustrate the extent to which rope driving under the English system has been used in England.

I cannot close my talk without some brief reference to the opinions I have formed of your rolling mill rope drives in the Pittsburgh district. While many of the installations are on a larger scale than in England, you treat the drive so far as the rope to power is concerned in liberal fashion, or need I say with an underwritten expression of "safety first." Your power factor is generally ample, but nevertheless, gentlemen, your rope costs per ton of output, or on any other basis, are high and were we in England to get the comparatively short life out

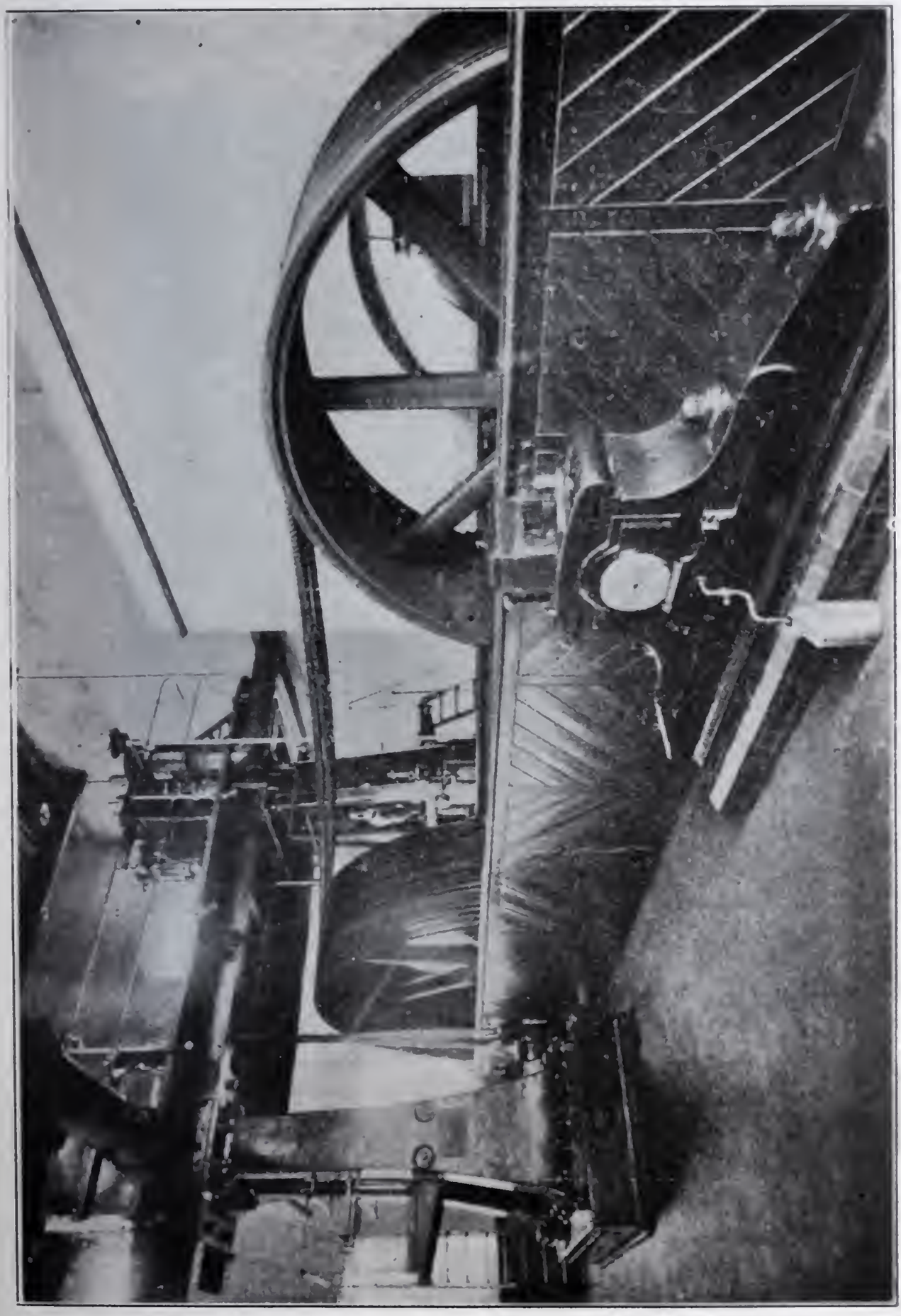

Fig. 14. Typical Mill Drive.

of ropes which you get here, I am afraid the mills would be laid down in some other fashion than as rope drives.

Fig. 15. Typical Vertical Drive, English System.

The rope driven mill in England is a harder proposition than here, the ratios generally being higher, due to higher speed engines and motors.

While I have learned of a drive here being re-roped every three or four months, I think your average life would be about 12 months to two years. Our average life would be over three times that.

I trust I have made out some case for driving by cotton ropes and I would close by inviting your attention in this direction, with the assurance that you will be amply repaid for any consideration or application you may give it.

DISCUSSION

PROF. W. TRINKS:* Not having used any cotton rope, I cannot contribute directly to the splendid paper of Mr. Alison. However, I can contribute indirectly by giving to the Society a dia-

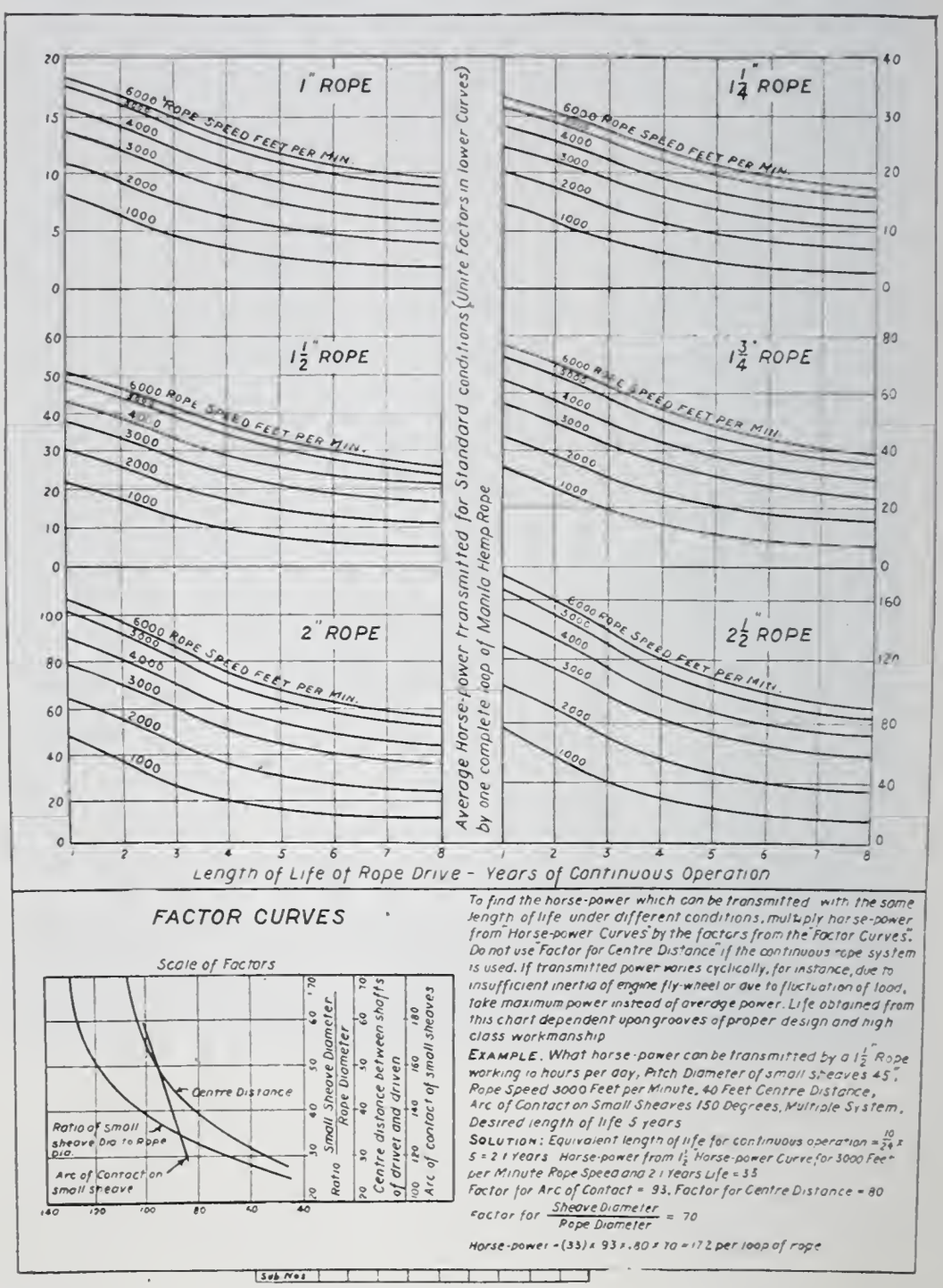

gram which I made several years ago for the Mesta Machine Company.† There is very little theory about this chart, because

*Professor Mechanical Engineering, Carnegie Institute of Technology.
†Published with the kind permission of the Mesta Machine Company.

the latter is based entirely upon practical observation. Length of life of rope, under varying conditions, was found from inquiries at almost all rolling mills using rope drives.

The mass of data thus obtained was carefully sifted and plotted. Kinks in the curves were smoothed out, because it was evident that in some cases the short life of the rope was due to improper finishing of the rope sheaves, or to lack of alignment.

The chart is particularly useful in determining the smallest diameter of rope sheave which can be successfully used. Evidently, smaller sheaves mean lower first cost, but greater cost of renewals and more frequent shutting down for repairs. The chart assists us in finding where the sum of the two costs is a minimum.

Now, if Mr. Alison can, either now or at some future time, give us a similar chart for cotton ropes, then we shall have a direct comparison which will be very helpful in the decision as to whether we shall stick to manila hemp or change over to cotton ropes.

Prof. S. L. Goodale:‡ I would like to ask in connection with these ropes if there is any preservative of any kind used in the manufacture of the ropes, and also if in the making of the ropes any difference has been found in their lasting power or their transmitting power according to whether one kind of lay is used or another, and what is the most successful lay of the rope?

A Member: I would like to ask Mr. Alison if any special method of lubrication of the fibers has been found necessary or advisable, and if so, of what character? We hear a great deal of lubrication of fibers referred to by leather belt people. There is just a possibility of some lubrication being necessary with ropes.

Mr. Alison: No, there is no sort of internal lubrication whatever, no oil or anything of that sort. There is only a black lead and tallow dressng, very finely applied on the outside of each strand.

‡Professor of Metallurgy, University of Pittsburgh.

A MEMBER: And is that applied frequently during the life of the rope?

MR. ALISON: The frequency of application is according to the industry in which the ropes may be used. When the ropes appear to become a little brown in color, it would be advisable to apply a little of the aforesaid dressing. Perhaps if I show you the construction of the rope you will appreciate this feature. Each layer is put on to run exactly in the course of the one underneath, so that we obtain an easy movement for each layer, when bending over the sheaves. With manila, if you look inside, there is a sawing movement between the layers, another cause of manila destroying itself. With this cotton rope, only the outside wears, and even if reduced in diameter, may be employed on a smaller size rope drive, thus obtaining longer life from it.

MR. H. A. RAPELYE:* Mr. Allen, can you contribute anything on the relative merits of rope transmission?

MR. J. C. ALLEN:† We have investigated to some extent the claims made for cotton transmission rope, enough to believe that it is worth giving a trial, and we hope to see it tried out on one of our eight rope drives. These each consist of 26 two-inch diameter ropes, 34 ft. to 54 ft. wheel centers.

MR. H. A. RAPELYE: What you have previously done, has it been done by manila or leather?

MR. ALLEN: Always done by leather.

MR. H. A. RAPELYE: I would like to ask whether the difficulties that Mr. Alison suggests have arisen with fractional loads with the English system of individual roping would be apt to occur with the American system of continuous strand rope?

MR. ALISON: I am sorry that we have not the equivalent practice to offer you on that. We have no American practice,

*Sales Engineer, Terry Steam Turbine Company, Pittsburgh.
†Chief Engineer, Carnegie Steel Company, New Castle, Pa.

that is the single rope practice, in England on work of this kind. Where the American endless rope drive is in use is on crane work. We never employ it in heavy construction work at all. But I should think it would be bound to observe itself and the rope fluctuations would be bound to be perceptible.

Mr. E. K. Hiles:‡ I understand the rope drive is used quite extensively in tin plate mills. I would like to ask just what led to the introduction of rope drives and what they replaced in tin mill practice, whether they formerly used leather belt or direct drive or what, and whether they have ever used cotton rope or if they always used manila rope.

Mr. George A. Rigby:* I am not in the tin plate business, but am with the Carnegie Steel Company, New Castle Works, who operate a bar mill and make the bars for the tin plate mills. This mill was built in 1898 and was originally started with eight rope drives of the English system, consisting of 26 two-inch six-strand ropes to each drive. We have been using manila since 1898 and our average life of rope is about three years. Recently Mr. Alison came along and undertook to show us greater efficiency with his cotton rope, so we have about concluded to try at least one drive equipped with his ropes.

Our first experience in rope drives was in the wire mill of the New Castle Wire Nail Company, in 1890, and later in the rod mill of the same firm. The rod mill was originally started with belt drive and they had considerable trouble with slippage, etc. A new addition was put in with rope drive, which proved very satisfactory and which led to the rope drive being used in the building of the bar mills.

Mr. Hiles: What is it that causes the failure of manila ropes?

Mr. Rigby: They just wear out. They wear out on the outside, as Mr. Alison explained in the picture.

‡Secretary, Engineers' Society of Western Pennsylvania.
*Master Mechanic, Carnegie Steel Company, New Castle, Pa.

MR. HILES: A straight reduction in the diameter of the rope?

MR. RIGBY: Yes.

MR. HART: Mr. Alison spoke of the ropes revolving in some cases and the advantage of the rope remaining one side up. If the rope starts to turn over, what do you do? Then in regard to slippage as against leather belts, I would like to know your experience.

MR. ALISON: We want to get the rope fixed. It is the bending of a rope that destroys it, and since the fixed rope only bends one way, it has this advantage in life over the revolving rope. If you have your rope revolving, the revolving taking place between the sheaves, it screws into the sheave and screws out. In rolling mill work, with the ropes showing the load fluctuations, the fixed rope will bite into the groove, whereas the revolving rope will screw in and screw out and create slippage. It is not always possible to get the rope wedged, but engineers in England would insist upon cutting off a revolving rope and resplicing it until it fixed, since it is apparent the rope is destroying itself when it revolves.

MR. HILES: I would like to ask concerning another phase of the use of ropes. In this country, in contractors' plants, manila and hemp rope are used almost exclusively for cable ways, haulage, derrick work and rigging of various sorts. What experience has been had with cotton rope for that sort of work? How would it stand up under weather conditions and rough usage and getting into sand and all that sort of thing such as is met with in a contractor's plant?

MR. ALISON: Manila rope is of higher tensile. For contractors' work they want the rope which will carry the greatest strain. In this particular cotton rope the tensile is up to about 80% of manila. As to effect of water, on the Manchester Ship Canal they use cotton ropes for towing lines, because cotton will

give off the moisture more readily than manila, and will not mildew or rot internally as manila does.

Mr. Frank L. Egan:† Mr. Alison has shown us a table of the horse-power different sizes of rope are capable of transmitting at various speeds up to 7000 ft. per minute. He states the power transmitted actually increases up to a speed of 7000 ft. per minute, and we know that it does increase beyond the speed of 5000 ft. per minute, usually considered the high point in the power curve. I would like to know how Mr. Alison explains this increase of power transmitted. Is it due to the wedging action of the rope in the groove? American engineers, I believe, consider 5000 ft. per minute as a good average for economy, taking into account cost of rope and drive complete and also upkeep on the entire drive.

Mr. Alison: Yes, the wedging action has a very great deal to do with it. But, as I mentioned in the paper, the best example of that drive is in Cleveland, 2 in. rope running 7800 ft. over 55 in. sheaves, that is 27½ times the diameter of the rope, whereas the American practice calls for 40 times, and that sheave should have been at least 80 ft. Yet it is doing well enough, and they are getting eighteen months to two years out of the rope. But centrifugal tension ought to have been at work to take those ropes clear off the sheave driving at a ratio of 3½ to 1. That is a very interesting instance to me and I shall take that back to England.

Mr. Egan: Mr. Hiles has asked about the wearing of manila ropes. We have a drive installed nine years ago. Rope 1⅛ in. diameter running continuous over driver and four driven shafts at different angles, transmitting 200 h.p. at about 5000 ft. per minute, 2100 ft. of rope and two tension carriages. This rope averages about one year in twenty-hour service and does not show any external wear. The inside of the rope chafes to a fine powder, so that it will shake out as dust when strands are opened. This drive would pay if rope life were only three months.

†In charge squad, H. Koppers Company, Pittsburgh.

Another drive was installed about 15 years ago to transmit approximately 2000 h.p. from a cross-compound engine to four line shafts for driving electric light and power generation, one continuous rope 1¾ in. diameter to each line shaft, or four in all. This drive was installed to save the old generators until a new franchise was granted four years later. Service was about 18 hours a day. Line shaft bearings and friction clutches made some trouble until replaced. This drive was so successful that it continued in service eleven years with the original four ropes. They were spliced twice to my knowledge, perhaps more. This was manila rope of high quality, and it was still capable of good service when drive was discarded.

In our practice we have used the 45-degree groove Mr. Alison recommends to the exclusion of all others. The groove is machined to pitch accurately, and no attention paid to polish. It is cheaper and easier to polish grooves with emory or carborundum sticks held in the groove by hand when drive is started and rope is being run light.

The practice of using three or four ropes multiple system for driving engine governors is not safe, as one rope breaking or running foul of others has in at least one instance broken governor shaft bracket and wrecked the drive. In early American practice some drives were installed with wood rim sheave, built in segments with the grain of the wood running in different directions. Naturally these grooves wore in such a way as to wear the rope rapidly and the drives failed. We replaced five such drives. I would like to ask if wood rim sheaves were used in English practice?

Mr. Alison: I do not think they have been. I would not say for certain, but I have never known of any drives in England where the wood rims were used. They would certainly show up better under cotton rope than manila, since the latter would scrub and soon show indentation in the wood.

Mr. Hiles: How is the wear on cotton rope manifested?

Mr. Alison: By the fibers outside breaking, due to the bending, as in any other rope.

Mr. Hiles: Do you have any internal wear due to friction, as they do with manila rope?

Mr. Alison: Well, look at this sample (a piece that has been in service for 19½ years) and see the inside of the rope. It is quite good, except that a little oil has gotten into it. You do not get the internal abrasions with three-strand rope that you would with a four-strand.

Mr. Hiles: Not as you do in manila rope?

Mr. Alison: No.

Author's Closure: Replying to Professor Trinks, I think his chart of durability of manila rope very helpful, and I should be very glad to contribute a comparative chart of cotton rope drives, but he sets me on a very wide search for such data. I shall endeavor, however, to obtain some such information on my return to England.

I hope to be able to demonstrate to him in the Pittsburgh district, on the rolling mills, what has been the broad contention of my paper—that cotton ropes are not only good for a much higher factor of efficiency, but they will also give a longer life and require less attention to take up, and show less liability to stoppage of the mills for removal or replacement.

SOME FUNDAMENTALS OF SCHOOLHOUSE DESIGN

By C. L. Wooldridge*

The construction of a modern schoolhouse presents so many sides to the engineering profession that it is impracticable to more than briefly touch the more important features in a single paper.

The Pennsylvania school law of 1911, commonly known as the School Code, provides that the Superintendent of Buildings in the school district of Pittsburgh shall be an engineer or architect, and as the office was to have charge of the operation of 145 buildings, as well as the design and construction of all new buildings, the Board of Education decided to select an engineer for the place.

I will not attempt to describe the operating side of our organization beyond giving you a few facts which indicate the scope of that work.

The School Board owns 169.3 acres of real estate within the school district. On this is erected buildings aggregating 96 720 000 cubic feet. To state it more graphically, if all the land between the two rivers and west of Smithfield Street were cleared off and had erected thereon a building eleven times the size of the Union Arcade it would be equivalent to the Pittsburgh school plant. The equivalent of 21 000 boiler h.p. is required to operate these buildings. The annual fuel bill amounts to $94 000, while the electric light and power bill equals $39 000. Three hundred and fifty janitors and cleaners are paid $280 000 yearly for the care of these buildings, and a daily average of 107 plumbers, steamfitters, carpenters, electricians, painters, etc., look after the repairs at an annual cost of $122 000.

The question of remodeling old school buildings, eliminating fire risks, bad sanitation, inadequate heating and ventilating, and poor lighting, is worthy of a paper by itself, and I will not touch on this at this time.

*Superintendent of Buildings, Board of Public Education, Pittsburgh.

Upon the passage of the School Code the Pittsburgh School Board adopted the plan of selecting different architects for each respective building.

These men work under a definite program furnished them by the Superintendent of Buildings. In this way we have obtained decidedly different types of architecture and yet the buildings are uniform in their standard educational features. For instance, we have built five new elementary schools in different sections of the city, all from the same program. The plans were prepared by five different architects and differ radically in appearance, yet the buildings are identical in capacity, appointments and equipment.

In selecting its architects the Board limits itself to men practicing in the City of Pittsburgh and endeavors to secure the highest type of professional service without any competition.

The architects are paid the customary percentage on the cost of the work, and as this is the standard practice throughout the country, I wish to point out some of the fallacies of such a system: Suppose an architect is to be paid six percent on the cost of a structure. After the contract is let and the amount of his compensation is established he finds that by changing his drawings at some cost to himself he is able to save his customer considerable money. He is actually penalized by having his fee reduced in this case. On the other hand, if the architect should make an error in his plans, for which the owner may in no wise be responsible, the contractor will get extra payment for correcting this error, the owner is penalized therefor, but the architect actually has his fee increased. Would it not be better for all concerned if the architect and owner, before the plans were drawn, should reach an agreement as to a lump sum which the architect should be paid for his services. I mention this at this time because the percentage plan frequently is used between the engineer and his client and the same argument will apply thereto. It is only due to the generally high moral standing of the architect and engineer as professional men that the practice in this respect is not badly abused.

In addition to the program, which will be discussed fully in this paper, the Superintendent of Buildings furnishes the archi-

tect with a complete location and topographical survey of the site and a report on the sub-surface conditions as established by complete exploration with a core drill.

We have found by experience that nothing can be taken for granted as regards the sub-surface conditions in the Pittsburgh district. For instance, at the Schenley High School we expected to encounter reasonably good soil, but after drilling all over the site to a depth of 90 feet we found the sub-surface composed of clay, which became consistently softer as the drill went deeper. As a result, this building rests on 1600 concrete piles, many of them 39 feet long.

At the Watt Elementary School the drill penetrated an abandoned coal mine which underlaid a large part of the site. In this case a shaft was sunk into this mine for more definite information. We have found that few, if any, records exist of old abandoned coal mines in the city, although these old workings are numerous and extensive.

The Program—While the requirements of the program are strict in many of its details, at the same time the utmost freedom is given the architect in his exterior design. The building is required by law for an express purpose, and it should present an appearance of dignity and should clearly express its function.

Story Heights—The Pennsylvania State law requires that every schoolroom or similar compartment occupied by pupils shall contain a minimum of 200 cu. ft. of air space per pupil. This requirement results in the necessity for unusually high ceilings. Thirteen and one-half feet in the clear is the proper ceiling height for all floors above the basement, and as the basement or ground floor of a modern school is used very extensively for educational purposes, the minimum clear height of this story is limited to 12 ft. As a rule, it will be found that most modern school buildings measure 15 ft. from floor to floor.

Entrances—Entrances for the pupils are required at the bottom of each stairway. The entrances should be placed at grade and not more than two steps should be exposed to the weather. At least one foot of entrance should be provided for each twenty occupants of the building. The distribution of these entrances is further discussed under stairways. An entrance should be pro-

vided into or convenient to the boiler room large enough to accommodate the largest piece of machinery or equipment which is liable to be removed from the building. This requirement may seem elemental, but it is one which is usually neglected. No stair entrance or exit should be of any less width than the stairway or corridor which it serves, and when an entrance serves both a stairway and a corridor it should be provided with separate pairs of doors directly in line with the respective points of travel. Many authorities on fire protection are in favor of providing converging walls to the doorway, thus eliminating pockets. I cannot agree with this point of view, as I believe anything which resembles a funnel should be avoided in handling crowds, and the separate pairs of doors accomplish this most effectively. The large monumental door so much used in the past has no place in a schoolhouse. It should be borne in mind that these doors are to be used by very small children. They should not be more than 3 ft. 2 in. in width, 7 ft. in height and 1¾ in. thick, and the door check should be so adjusted that a child can operate the door with little effort.

Stairways—Stairways should be separated as widely as possible and serve as centrally as possible a given unit or division of the building, and no classroom should be more than 60 ft. from it. The number of stairways required is, of course, governed by the size of the building, but the following rule may be safely applied: In a two-story and basement building there should be one stairway for each group of six classrooms per floor. In a three-story and basement building there should be one stairway for each group of four classrooms per floor. No building should contain less than two stairways. As modern practice is eliminating anything higher than three stories for public school purposes, the rule is not carried any further. I believe the only exception to this practice is to be found in the city of New York, where the schools in some cases are nine stories high. Stairways should be in two runs to each story, with a platform equal to the width of the stairs. Platforms wider than this are just as dangerous as though they were narrower. Five feet is the ideal width for a schoolhouse stairway, and the stair hall should not be less than 12 ft. in width and should not exceed 15 ft. For easy supervision an

open well is desirable. The rise of the steps should never exceed 6½ in., and the sum of the rise and the tread should not be less than 18 in. or more than 20 in. The height of the balustrade should not be less than 3 ft. 7 in., measured in line with the face of the riser. Both sides of the stairs should be provided with handrails, and wherever possible this handrail should be continuous from the top of the stairs clear through to the exit, this handrail to be set 2 ft. 3 in. above the step in line with the face of riser. The stairs should be screened off from the corridor with wire glass and steel, which will make each stairway a completely enclosed fire tower.

Corridors—The main corridors should never be less than 12 ft. in width, and many educators prefer them much wider. No branch corridor leading to a single classroom should be less than 6 ft. in width. For economical reasons the classrooms are usually placed on both sides of the corridor, cutting out daylight. If this is done the corridor should be run through to the light at both ends, which will usually give the required amount of light. Classroom doors opening into the corridor should have the upper panels glazed with clear wire glass, which will materially help the lighting and, from an administrative standpoint, is desirable. In recent years the lockers in high schools are frequently placed in the corridors instead of in general locker-rooms. If this practice is followed the minimum width of 12 ft., mentioned before, should hold good when the locker doors are open. In other words, 12 in. by 18 in. lockers placed on both sides of a corridor will require the corridor to be 17 ft. in width, unless the lockers are recessed in the walls.

Educational Rooms—The size of educational rooms varies with their function. The state law, however, requires that there shall be provided 15 sq. ft. of floor space for each occupant. As the maximum number of pupils which should be allotted to a single teacher is 48, the ideal size for this number will result in a room 24 ft. wide by 32 ft. 6 in. long, lighted from windows placed in the wall on the long axis of the room at the left-hand side of the pupils, and containing a free glass area equal to 20 percent of the floor area. The glass should be at least 40 in.

above the floor, and in order to get the required 20 percent it will be found that it is necessary to run the windows close to the ceiling. In no case should the width of the room exceed twice the height of the highest daylight. The modern school, in addition to the classroom, now contains many special departments, such as household economy, manual training, kindergarten, arts and crafts, nature study, music, application work, lecture-rooms, playrooms, etc. The above rules may vary in application to such rooms, but usually they can be applied successfully. The fenestration in a modern school puts a most difficult problem up to the architect. He is compelled by law to design what is literally a box full of holes. He is not allowed to mass his masonry to obtain an artistic result, and if he produces anything that looks better than a shoe factory it is due to unusual cleverness and ability.

Auditorium—The comparatively recent schoolhouse with the auditorium on the third floor has disappeared. This room should never be placed above the first floor and it is best to get it as close to grade as possible. As there is a feeling that the auditorium should be used for other purposes than assembly, such as gymnasium work, etc., the floor is frequently level and provided with loose seats. As this arrangement has many drawbacks, we have adopted the following plan for our future school auditoriums: The floor will be sloped, providing good vision. It will be seated with anchored opera chairs. The size of the stage will be greatly increased and will be fitted as a combination stage and gymnasium in full view of the auditorium. This plan has been tried in some western cities and is successful in every way. The chairs in the auditorium should not be closer than 30 in. back to back, and not more than 20 percent of the total number of seats should be less than 20 in. in width, and no chair should be less than 19 in. in width. As the stage extends the full width of the auditorium it is necessary that it should be connected by special stairway to the dressing rooms, which may be placed on the floor below, and which can serve as well for swimming pool dressing-rooms if such an undesirable department is included in the program.

Swimming Pool—Probably this is not the proper place to voice a protest against the growing use of the public indoor swimming pool, but there are a few things I want to say.

The swimming pool is a plaything which the public is demanding in practically every schoolhouse built today. It is exceedingly expensive to build, is expensive to operate, and I have never seen one yet where it is not harmful to the other departments in the building. The humidity is excessively high in and about such a room, and the architect usually fails in the isolation of such conditions. If any man here tonight were to enter his bathroom, and find that his child or other loved member of his family had washed their hands in the wash basin and had failed to pull the stopper, he certainly would not proceed to wash his own hands in that water, but would empty the basin and put in a fresh supply. Yet we do not hesitate to send our children into swimming pools containing water which has been bathed in by hundreds of other children of all kinds; and they not only swim in this water, but they allow it to get in their eyes, nose, ears and mouth, without any thought of what it may and does contain. I am of the firm opinion that the modern indoor school swimming pool, even if provided with filters, sterilizers, violet ray outfits and any other device intended to remedy the unsanitary condition of the water, is a decided and dangerous menace to the health of our children and should be suppressed by law.

Toilet Rooms—No fixed rule can be given for the proper location of toilet rooms. This should be governed by the method of administering the school. If the building is on the faculty plan, where the children go from room to room at the end of each period, the toilet rooms should be uniformly distributed through the building. If the school is operated in the usual manner, where the children dismiss for recess at fixed times, there should be toilets located on the ground floor and accessible from the playgrounds which will accommodate the entire school in an exceedingly short space of time, and these general toilets should be supplemented with small emergency toilets throughout the building. As a general rule, one closet should be provided for each 25 boys and one urinal for each 20 boys. One closet should be provided for each 15 girls.

Artificial Light—The question of artificial light is a very broad subject, and I will only state that we have found from experience that 600 watts distributed in six outlets in a room 24 ft. wide by 32 ft. 6 in. long will give adequate light under all conditions. These outlets should be arranged in two circuits, so that the row farthest from the daylight may be operated separately from the row nearest the windows.

Heating and Ventilating—The state law requires that the school building shall contain a heating plant adequate to maintain the temperature in the building at 70° F. under all conditions. It also requires that 30 cu. ft. of fresh air must be delivered per minute per pupil. In the School District of Pittsburgh we have the following general requirements:

Steam heat is used exclusively. Enough direct radiation is placed throughout the building to heat the building under average winter conditions without any help from the ventilating plant. We install sufficient indirect radiation in connection with the fan installation to meet the requirements of the code in the quantity of air delivered and to supplement the direct radiation in severe weather. The air is introduced from the outside, is raised to a point above freezing by means of tempering coils, is washed and humidified and then raised to the required temperature through reheating coils. All this indirect as well as the direct heating is automatically controlled by one of the customary thermostatic devices. The percentage of humidity in the air content is also automatically controlled.

During the past five years the Board of Education has completed seven new elementary schools and two new high schools at a cost of $3 168 721. The average cost of the general work has been 14.6c per cubic foot. The cost of the heating and ventilating has been 2.9c per cubic foot. The cost of the plumbing has been 1.2c per cubic foot and the cost of the electrical work has been .8c per cubic foot. The total cost of all buildings has been 19.5c per cubic foot. The Board is now making plans for two new high schools, four new elementary schools, and substantial additions to four existing high schools and one elementary school. Inasmuch as bids taken last December indicated an increase in the cost of construction amounting to 56 percent above contracts

let a year previous to that date, the Board has decided to delay letting contracts for any additional buildings until such time as prices begin to approach a normal condition.

DISCUSSION

Mr. John A. Ferguson:* After having heard this excellent paper tonight and the statements contained therein of the remarkable magnitude of the work included, the question of the design of school buildings, especially for the City of Pittsburgh, is one of modern engineering business problems. To provide facilities for the needs of modern teaching of pupils in the present-day instruction calls for serious thought and study to produce a building that will contain the necessary arrangements adequately provided and arranged in an efficient and satisfactory manner so as to comply with the requirements of the instructors and assist them in their work, as well as to anticipate the necessities of the future.

It is important that this last be given serious thought on account of the nature of the structures being built, as they are practically permanent buildings and, barring abuse and unforeseen accidents, should be available for service one hundred years or more from now. From this you will see the responsibility of those in charge and the necessity for true modern engineering and planning in the construction of school buildings.

The problem of laying out school buildings, aside from architectural considerations provided to make the appearance suitable for location and use, is divided into two principal headings:

1. The planning and laying out of the internal arrangement of rooms and corridors for convenience and suitability for the purposes intended, also to altering or changing conditions should it become necessary to use the building for other purposes than at first intended.

2. The planning of the structure itself for safety, fire resistiveness, permanency and low cost of maintenance. It is with the second subject that my remarks will deal principally.

*Secretary-Engineer, Building Code Committee of Council, Pittsburgh.

Before attempting to make the design and calculations for strength of the building, it is preferable to lay out the structure for safety. The principal items in building construction are fire resistiveness and safe entrance and exit afforded occupants, the principal item for safety being the matter of exits. Their location and arrangement can be varied to suit conditions, but a few general principles are of vital importance.

1. There should not be less than two exits from any building. This is to avoid being closed in when a fire or other accident occurs, cutting off the exits. At times, owing to the peculiar shape of buildings, many more exits are necessary to allow egress from building in case of fire.

2. There should be an exit at the end of each corridor, since it is impossible to determine in advance which way people will travel along a corridor; and should corridors have dead ends without exits, the occupants would be shut off from means of egress with disastrous results.

3. Exits from upper floors should never open upon the same hallway, as exits below the first or ground floor. This principle is true, as most of the manual training and other courses are taught in the basement, and the rooms in which these courses are taught usually contain a considerable amount of inflammable material and are, consequently, a considerable source of fire danger. Even though these rooms are shut off from corridors and hallway doors by efficient partitions and doorways, the doors might be left open, allowing the smoke or flame through, thus hindering or preventing exit through hallways common with those above. In view of this, it will be seen that exits from basements should be at least as efficient as those of the upper stories, as occupants do not have the added freedom of exit by jumping. They are absolutely closed in without sufficient exit.

While there is little material to burn in the modern school building, and none in the structure, to the uninitiated it would appear that the very extensive system of precaution now being used for safe exit is hardly necessary, yet when you reflect how confused and panic stricken adults become at an alarm of fire or other danger, in the case of children we must multiply this many times, so that the necessity for these precautions is apparent.

The speaker of the evening has detailed amply the matter of construction and arrangement. However, it will be well to emphasize and pay strict attention to his remarks against contractions of exits in the direction of travel and of placing obstructions which are apt to stop ready and easy progress in case of fire or other panic. Fire-resistive construction of corridors cannot be made too safe.

4. *Construction.* In view of the fact that the maintenance of an institution of such magnitude as this cannot be provided for without a serious drain on the city, due to its excessive cost, permanence of construction, in spite of added first cost, seems to be the only desirable aim, and only incombustible and permanent materials should be used in the structure. It makes no difference whether the building be one story or more.

The usual practice of separating the boiler room from the building proper, as employed by those charged with the construction of school buildings in Pittsburgh, appears to me to be of first importance; not necessarily from the standpoint of fire, for we rarely hear of fires in coal bins, although in case of oil, if used as fuel in the future, these fires may possibly occur. Aside from the fuel used in boiler rooms and power houses, there is absolutely nothing to create or sustain a fire; consequently, there should be no danger from fire.

However, the high-pressure boilers for power, light and other purposes are a serious menace where so many children are concerned. To depart one moment, any man in this audience tonight who is a father will back up my statement that he would give his own life for the lives of his children. Why, then, would he needlessly and thoughtlessly risk their lives where there is a chance of explosion through carelessness in operation of high-pressure boilers? Such things are not allowed in theaters or assembly halls of any kind, and it is, in my opinion, decidedly questionable to allow them in office and other buildings in the city. The writer is not in sympathy in any way, and certainly would refuse to be responsible for the construction of any schoolhouse including a power plant, no matter how carefully planned, laid out or enclosed. I know this view is slightly divergent from that held by many, but positively I cannot understand the laxness of those

who advocate the inclusion of high-pressure plants within school buildings.

The question of the proper height of school buildings is one not yet determined, but it is true the lower they are the better; as the higher they are, the greater the danger and more uncertain the exit conditions. It is a well-known fact that exit conditions are more uncertain in higher buildings. There are only a few cities in the country where it is necessary to build such buildings as high as eight and ten stories; certainly not at the present time in Pittsburgh, and we should not consider such high buildings, no matter how adequate the construction of elevator or other exit service may be. School buildings in Pittsburgh, in my opinion, should not exceed three stories in height, and if possible, not more than two.

Responsibility for the design of school building rests with those charged with their design and construction. This means the architect or the school board, or both. All too frequently, these gentlemen do not feel or apprehend the responsibility of their position. The lives of our kiddies are dependent upon their skill and ability. They should know and be able to throttle the desire for cheapness of construction at the expense of safety to patrons. They should state wherein the danger lies and stand squarely on the proposition that the lives of the young are just as dear as the lives of adults, and more necessary to the state.

If it ever devolves upon me to determine the responsibility for loss of life through fire and the punishment to be meted out, I would accept no excuse of ignorance on the part of those charged with the work, as I believe that carelessness or ignorance is criminal. We have finally reached the point of our jurisprudence where reckless automobile drivers are prosecuted criminally for negligently causing the death of another, and it is proper to mete the same punishment to those who violate our building laws and thus cause the death of innocent people. Previously law has followed the thought of the people that fire and panic are the acts of God; hence no one should be held accountable. People commonly feel that it is perfectly logical to hold those responsible for criminal negligence in case loss of life is due to their carelessness, but do not seem to be able to bring

themselves to the point of solving the problem. They seem to think the problem is without solution. However, it would not be without precedent to even execute or take the life of those responsible for death of another in a building law. Such a law is 6000 years old where life is payable by life in the well-known and wonderful code of laws written by Ham-u-Ra-bi in the time of the Phoenicians. The building code is short, brief and to the point, but explains the existence of their buildings to this day. I will quote one of the six sections: "If a builder build a building and the building fall down and kill the owner thereof, *they shall kill the builder.*"

This was extended to such a point that the builder was required to make good, injury for injury, to the extent that if the owner's wife were killed through his negligence, his wife's life would be forfeited, or his servant for the servant of the owner; consequently, builders erected buildings to stand in those days and the owners had to accept and not dictate what was to be taken as safe.

I wish to ask the speaker several questions. What width of stairway would be calculated for the exit of one row of pupils; is it 18 or 20 or 22 inches, for instance? How many pupils would be permitted for each item of stairway of the aggregate width throughout the building to occupy floors served by those stairs? That is an interesting matter in regard to building code possibilities. Aside from that I cannot think of any further discussion.

Mr. Wooldridge: Replying to Mr. Ferguson's questions, we require our stairways to be 5 ft. in width, with the idea that they will be used by two pupils marching abreast. Under this condition each pupil can grasp the handrail and there is very little danger of their falling. If the stairway is made wider and more than two pupils march abreast, only the two outside ones can grasp the handrail and, consequently, the danger of the others falling is increased.

Member: How long does it take to empty a schoolhouse under those conditions?

Mr. Wooldridge: We try to have our stairways and exits in the school buildings so arranged that the building can be emptied in a maximum of one and one-half minutes. We have some buildings which can be emptied in thirty seconds.

Prof. H. R. Thayer:* I notice that the author gives the rule that one riser plus one tread should equal a certain amount. I prefer the rule that the sum of two risers plus one tread should lie between 24 and 25 inches.

Further, I wish to inquire concerning the author's experience with acoustics. What has he ascertained in regard to its cause and effect? Would he be kind enough to give details of the construction of the swimming tanks, and has this construction been successful in avoiding leaks?

Mr. Wooldridge: I believe the rule using the height of two risers will bring you approximately the same result as our rule of requiring the sum of the riser and tread to be between 18 in. and 20 in. and limiting the height of the riser to 6½ in.

As to Mr. Thayer's question on acoustics, I am familiar with only a few general principles which can be applied. I do not feel that I am competent to discuss the subject fully. We all know that soft surfaces are better for the acoustical properties of a room than hard ones. Therefore it is safe to use soft wall plaster, upholstered chairs, etc. In general, I think it will not cost any more to complete your auditorium or other room and after the work is finished if the actoustics are bad have it remedied by an acoustical engineer, than it would be to employ one in the beginning, in order that he may be able to incorporate his various devices in the original construction.

In regard to swimming tanks, we first build a reinforced concrete tank, using one of the well-known concrete hardeners. Inside of this tank we apply five layers of waterproofing fabric in the customary way. At this point the pool is filled with water and tested and any leaks stopped. When it has been rendered water-tight the enameled brick lining is placed. Pools constructed

*Assistant Professor, Structural Design, Carnegie Institute of Technology, Pittsburgh.

in this way should not leak. If any leaks do develop they are usually very small and it is not long until the vegetable growth which develops in small leaks in concrete work will gradually cause the leak to fill up and stop.

Mr. L. P. Blum:* I would like to ask what is the objection to too wide landings.

Mr. Wooldridge has told us the requirements of the state code with reference to ventilation, etc. I presume those requirements do not affect buildings in use at the time of the passage of the code.

Mr. Wooldridge: In regard to the width of the landing, if you provide a wide landing you have the children descending the stairway at a certain velocity and when they reach a landing wider than the stair they are apt to spread out and slow down, which is a bad condition. It is best to keep them moving at a uniform speed, and that is why music is so desirable in dismissing them.

As to ventilation, the law states that if you alter a building to the extent of $4000 the alteration must include the change in ventilation so that each pupil is furnished with 30 cu. ft. of air per minute.

Mr. W. R. C. Rowan:† I wish merely to state then that notwithstanding the impression of some very able persons to the contrary, it is perfectly possible not only to entirely correct defective acoustical conditions in buildings, but also to make such provision in the preparation of plans and specifications in advance of construction as will absolutely assure good acoustical properties. The room in which we are now sitting is a typical illustration of our ability to predict in advance of construction just what the acoustics will be. About a year ago the firm with which I am connected, the Mazer Acoustile Company, made a report on this room, after carefully going over the plans and specifications, in which the parties interested were advised that the hearing condi-

*Blum, Weldin & Co., Pittsburgh.
†Secretary and Sales Manager, Mazer Acoustile Company, Pittsburgh.

tions would be very bad if not controlled by the proper treatment and stated exactly the duration of audibility which might be expected. As Mr. Wooldridge has very properly said, you gentlemen are perhaps the best judges as to whether this room is or is not acoustically right. If you can hear clearly every syllable of a speaker without difficulty and without overlapping by the reverberation from previous syllables, then there should be no criticisms and the acoustics are good. If, on the contrary, you are under a constant strain in your efforts to hear the words of a speaker, the acoustics are certainly defective.

I thank you, Mr. Chairman and gentlemen, for the privilege of taking the floor, but do not wish to say anything further at this time, as it may appear too much like personal advertising. I shall, however, be very glad to answer any questions which any of you gentlemen may care to ask.

Mr. H. M. Eastman:* One of the reasons given by the speaker for objecting to the placing of swimming pools in public school buildings was the humidity caused thereby. I would like to ask if this humidity shows itself in causing deterioration of the structure, or merely in making the atmosphere uncomfortable?

Mr. Wooldridge: It depends a great deal upon how much woodwork is in the adjacent rooms. My recommendation to any one building a swimming pool is to eliminate all woodwork in the swimming-pool room and as much as possible in the rooms adjacent thereto.

Mr. H. M. Eastman: Are all the swimming pools in the public school buildings of Pittsburgh located in the basement?

Mr. Wooldridge: Yes, on account of the difficulty in construction.

Mr. G. H. Danforth: I notice in the pictures the wall columns are shown as being of what might be called double or twin

*Structural Engineer and Draftsman, Keystone Works, Jones & Laughlin Steel Company, Pittsburgh.

construction, which seems to me to be rather an extravagant proposition.

Mr. Wooldridge: The matter of getting vent ducts located in a high school building is usually difficult. In an elementary school where there are cloakrooms the problem is easy, as a section of the cloakroom may be used for duct space. In a modern high school, however, the coatrooms do not exist, and it is usually best to take the ducts up through an inside wall which we call a breather wall, and this results in the columns of which Mr. Danforth speaks. It is true that they are difficult to erect. Of course this only applies to a building using a combination of outside bearing walls with interior structural columns.

Mr. L. P. Blum: I believe most engineers do not object to obtaining knowledge even from a man who is in business. Our visitor says there are certain principles of acoustics of which he hesitates to speak, through his business connection. I do not think it would injure us if he would give us at least the general principles underlying this subject.

Mr. Rowan: I feel that this is very much of a presumption on my part, and I hesitate to say anything in this gathering where I am merely a visitor. However, since you have requested it, I shall be very glad to give you a brief outline of this interesting science. The concern which I have the honor to represent, the Mazer Acoustile Company, of Pittsburgh, Pa., has been in the business of correcting and controlling acoustics for the past eight years. Our president, Mr. Jacob Mazer, was the first man, so far as we can ascertain, to receive the title of Acoustical Engineer, and the first big building where this work was undertaken in the United States was the Rodeph Shalom Temple, on Fifth Avenue, Pittsburgh, where Mr. Mazer corrected the acoustical defects in 1909, after that congregation had spent something like $30 000 in various experiments, none of which gave them any material relief. A visit to this magnificent building today, or a reference to any of the prominent gentlemen who are members of that congregation, will convince you of the excellent results which Mr.

Mazer obtained there. Since then we have been doing similar work in buildings of every kind throughout the United States and Canada, and have been uniformly successful in satisfying our clients. Some of the prominent buildings which have been treated under Mr. Mazer's direction are: The House of Representatives, Washington, D. C.; the House of Commons, Canadian Parliament Building, Ottawa, Canada; Houston Municipal Auditorium, Houston, Tex.; Dayton Soldiers' Memorial, Dayton, O., etc., and we have just recently completed our work in the Denver (Colo.) City Auditorium, seating 13 000 persons, and in the House and Senate Chambers of the Cheyenne (Wyo.) State Capitol Building. In our own vicinity, you will find the Acoustile system in the court houses at Uniontown, Butler, Coudersport, Smethport and Scranton, Pa., as well as numerous other buildings of various types.

To more specifically answer the gentleman's inquiry, I would like to state the acoustical defects in rooms of this kind are almost entirely due to what we call excess reverberation, or a multitude of echoes, caused by the large quantity of hard surfaces exposed on the walls and ceilings of the room, which unduly prolong the sound instead of permitting its quick decay, which is essential for good hearing conditions. Naturally, we must first obtain certain data before we can determine just what the acoustical conditions will be from a certain plan or what they are in a room already erected. We must have the volume of the room in cubic feet and the total area of all exposed materials in the room, such as wood, plaster, glass, carpet, etc. Each of these materials is known to have a definite absorbing efficiency with regard to sound, and by multiplying the area of each by its proper co-efficient and adding these results we determine the total amount of sound absorption existing in the room, which constitutes one of the factors in a formula which will give us the duration of audibility in the room, or, in other words, the length of time in seconds and fractions of seconds which sound may be expected to continue after it has left its source. This duration of sound should not be more than about one and one-half to two seconds for good hearing conditions. To illustrate what this means, the average speaker will utter about four syllables to a second, and if you have a duration

of audibility of five seconds it means that you will continue to hear deflected portions of the first syllable during the utterance of the following twenty syllables. As Mr. Wooldridge has very properly stated, the introduction into the room of any additional material, such as carpet, furniture, etc., will have a tendency to reduce the reverberation, and thus improve the acoustics. Just how much will be accomplished by this can be accurately calculated. The most practicable material to use, however, in the correction and control of excess reverberation is a properly designed wall and ceiling covering, by the use of which we substitute, for the hard plaster surfaces having an absorption of approximately only two percent, a material with an absorbing power thirty to forty times as great as plaster, and, of course, can determine exactly how much of this to use, and where it should be located. We always, of course, take into consideration also the number of persons who will use the auditorium at one time, as the bodies and clothing of the audience have a high absorbing power, and must be included in our calculation.

Acoustical engineering is a science which has been highly specialized and, as in all engineering lines, one must combine a long, practical experience with the theories in order to obtain uniformly satisfactory results. Each room must be considered separately, and there are oftentimes factors entering into the problem which do not appear to the casual observer. These variables, however, are not very great in importance, provided the question of excess reverberation is properly controlled. One gentleman here expressed the view that the beams in a ceiling have much to do with the hearing condition. As a matter of fact, they do not materially affect the problem, and the introduction of rounded corners, another much-exploited but erroneous so-called cure, only serves to concentrate the sound at certain spots in the room, and is usually harmful rather than beneficial.

The basis of our Acoustile construction is a specially made felt about 1 in. thick, and in rare cases 2 in. thick, and the exposed surface of Acoustile is a definite weight canvas very carefully stretched upon the supporting frames before they are erected, and afterwards painted or decorated as desired. There is a slight air space between this canvas membrane and the felt

which is underneath. In the early stages of our work, it was believed necessary to have the surface covering of a porous nature, but we discovered long ago that if the membrane was properly constructed it could be painted in any manner, there being no need of retaining its porosity. As a matter of fact, we get greater absorption without having it porous. This can only be done, however, if the fabric is stretched upon the supporting frames before they are secured to the ceiling or wall. It is also possible to use a surface of burlap, rep or tapestry, but these are obviously not sanitary or fire-proof, and are usually not as satisfactory as the painted surface.

Prof. H. R. Thayer: I have noticed that rooms of apparently similar construction often possess widely divergent acoustical properties. Is there any scientific explanation for this? Is it true that arched surfaces give rise to more interference than flat ones, and does the location of the resonant surfaces make any difference?

Mr. Rowan: As to the comparative acoustical conditions in rooms with arches and rooms having square surfaces, generally speaking, I would say this makes but very little difference. The statement is often made that the acoustical conditions are improved by "breaking up" the surfaces in the room. Architects usually mean by this the introduction of arches, pillars and alcoves, and while such rooms are usually better, acoustically, than those having large, plain areas in the ceilings and walls, it is undoubtedly due, not to the different shape of the surfaces, but rather to the greatly increased amount of exposed areas in the room, all of which contribute their quota to the total absorption of sound without proportionately increasing the volume in the room, thus effecting a reduction in the reverberation. Further than this, the shape of a room has but little to do with its acoustical properties, and we advise architects to lay out their designs in any manner desired, and then let us consult with them as to the treatment of the proper wall and ceiling surfaces where our material may be used instead of plaster or other hard substances. Good acoustics can thus be assured in a room of almost any dimensions or shape.

Answering the inquiry as to the character of the surfaces adjoining the platform, or the speaker, these should be hard, reflecting materials, particularly in large rooms. The decrease in the intensity of the sound is in inverse proportion to the square of the distance from the source of the sound. For example: The intensity of sound 50 feet from a speaker is only four percent as great as it is at a point ten feet from the speaker. To overcome this rapid decrease in the intensity it is necessary to reinforce the initial sound with such deflected portions of that sound, that is, the parts of a sound which strike the hard surfaces and are then deflected towards the hearers which will reach the ears of the audience at about the same time as the initial sound. On the contrary, such deflected portions of the sound as roam about the room for perhaps several seconds before reaching the ears of the listeners interfere with the clear hearing of later sounds and should be eliminated. This is what we mean by excess reverbration.

Mr. H. H. Rankin:* I would like to ask Mr. Rowan if there is anything to be gained by stringing wires overhead in an auditorium? I have noticed wires strung in such a manner in a number of churches.

Mr. Rowan: The use of wires to correct acoustical defects is absolutely of no value. In the Rodph Shalom Temple, Pittsburgh, for example, which I have previously mentioned, they had strung over 35 miles of wire back and forth across the ceiling without obtaining any benefit. These, of course, were subsequently taken down. One of the gentlemen mentioned that rooms having admittedly good acoustical conditions have been copied with exactly opposite acoustical results. This is to all appearances a fact, but in our experience we have found that in all such cases a careful analysis of the exposed material in the room disclosed the fact that they were of quite a different nature in their sound-absorbing efficiencies, and the cause of the trouble in the second room was quite easily ascertained by the methods which I have previously described to you. For example: In one case

*Civil and Mining Engineer, Pittsburgh, Pa.

they had, perhaps, used an old-fashioned hair plaster, possibly on a wood lath; and in the second case, perhaps, a hard patent plaster right against the brick or tile wall, which would give very different conditions. Also, there may have been more wood and other absorbing material present in one case than in the other. To the inexperienced observer, these differences would not be apparent, but the principles of this science have been quite definitely established, and such phenomena are no longer mysterious.

I thank you, Mr. Chairman and gentlemen, for the privilege of making these remarks, and assure you our company will be at your service at any time, and will be glad to give any of the members of this Society all of the information at our disposal on the subject of architectural acoustics.

BROAD RAILS VERSUS DEEP RAILS

By George H. Barbour*

Those distinctively American principles that govern the construction of railroad track as now practiced by all the steam roads in the world were evolved and demonstrated between the years 1828 and 1833, at the very inception of the art, when ground was broken on the Baltimore & Ohio, the Baltimore & Susquehanna, the Camden & Amboy, the New Castle & Frenchtown, the Mohawk & Hudson, the Saratoga & Schenectady, the Charleston & Augusta, the Boston & Providence, the Boston & Lowell and other isolated and unrelated roads; which, with the exception of the Baltimore & Ohio, were projected like our modern trolley lines simply to satisfy local needs or to form links in otherwise easily available lines of transit, and without thought of connecting distant points.

In that restricted field, backed by meager capital, without precedent or previous experience, a few pioneer American railway engineers, most of whom remain nameless and unknown, instituted that notable mechanico-structural achievement, not generally understood, at once resilient and reliable, through which the dynamic energy of a train dies out in static pressures on the soil, a fortunate combination, indispensable to railroad operation, in which the equipment on its track constitutes a flexible superstructure upon an elastic roadbed.

Ballasted wooden crossties were first used in 1830, on both the Baltimore & Ohio and Camden & Amboy, and in 1831 on the Saratoga & Schenectady, instead of the stone crossties and individual stone pedestals previously employed, to support the wooden stringers to which the strap iron rails were spiked.

The first locomotives were rigid four-wheelers brought from England, some equipped with four driving wheels and others with one pair of driving wheels and one pair of front carrying wheels. One of the latter installed by the Mohawk & Hudson in 1831 was so severe upon the fragile track that Mr. John B. Jervis, who was chief engineer of that road, as well as of the Saratoga & Schenec-

*Mechanical Engineer, Pittsburgh, Pa.

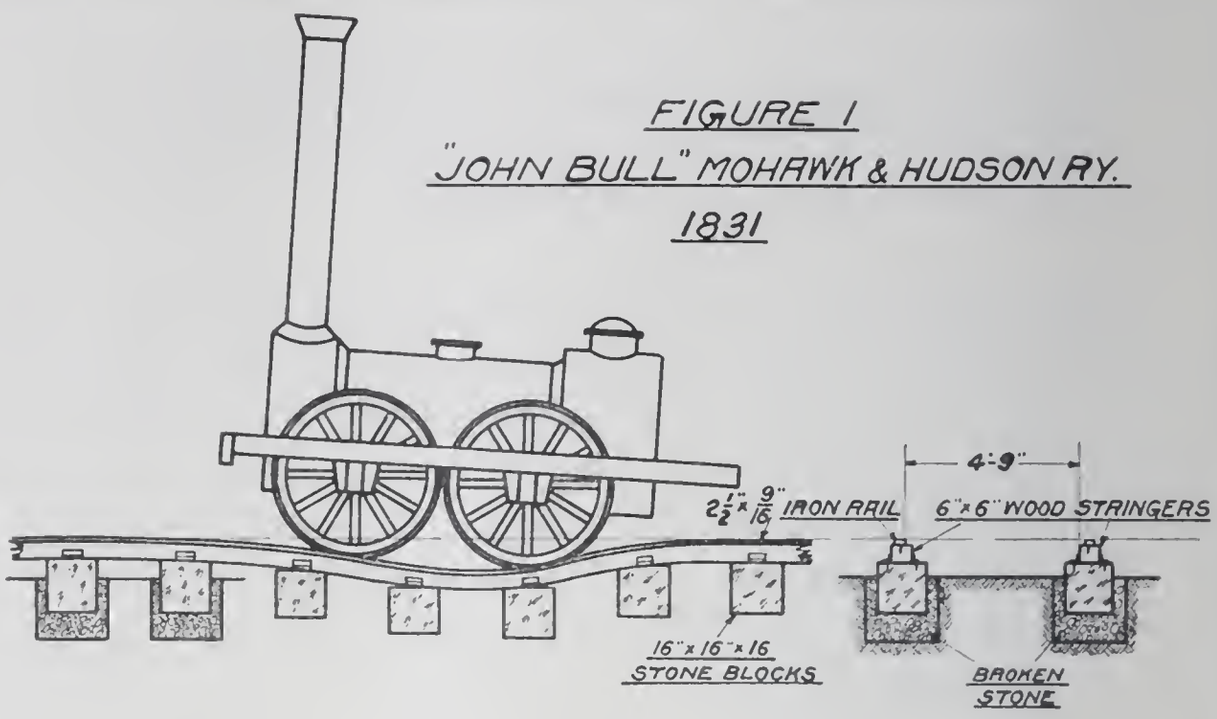

FIGURE 1
"JOHN BULL" MOHAWK & HUDSON RY.
1831

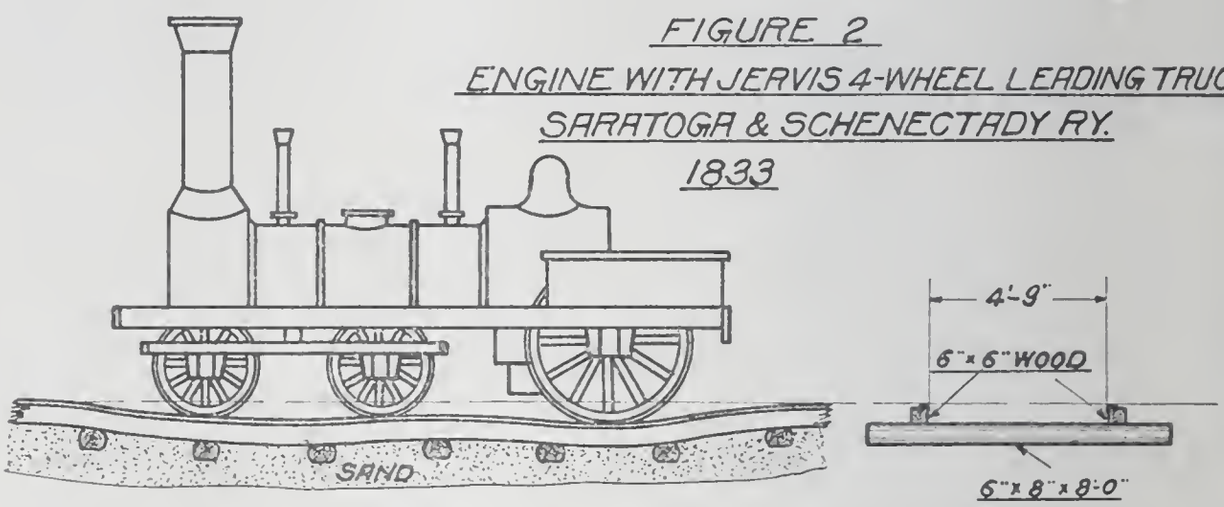

FIGURE 2
ENGINE WITH JERVIS 4-WHEEL LEADING TRUCK
SARATOGA & SCHENECTADY RY.
1833

tady, substituted a four-wheel leading truck, arranged for both vertical and lateral flexibility, for the rigid pair of carrying wheels. The action of the engine with its running gear thus extended, its front guided and its weight further "subdivided, distributed and constrained" by additional wheel contacts upon the rails, was found to be so much easier upon the track, and its ability to negotiate the slight grades and easy curves then in use so improved, that its construction was extensively copied, and with the addition, a few years later, of another pair of driving wheels it became the precursor of the American eight-wheel or 4-4-0 type of engine.

Figure 1 represents the rigid English locomotive mounted on its stone pedestal track.

Figure 2, an 1833 model equipped with the Jervis flexible leading truck, on ballasted wooden crossties.

Those interested in the earlier forms of steam road track and its equipment with their subsequent development are referred to that admirable article by Mr. A. W. Thompson on "The Magnolia Cut-Off Improvement on the Baltimore & Ohio Railroad," published in the December, 1914, Proceedings of our Society, Volume XXX, No. 9; while for the purposes of my argument I proceed to a comparison of steam road track conditions at two widely separated periods of its development—the early eighties of the last century and today.

Back in the good old days of 70-pound rails on 7 x 9 in. by 8½ ft. crossties, spaced 30 in. on centers, with the Typical Consolidation Locomotive loading of four 24 000-pound axle loads on 4½ ft. centers, designed by Mr. Wilson for the Pennsylvania Railroad, there was transmitted to each of the supporting crossties, considering the weight of the driving wheels distributed uniformly over 18 ft. of track,

$$\frac{4 \times 24\,000}{7.2} = 13\,333 \text{ lbs.};$$

and, through the bases of the crossties to the ballast, a pressure of

$$\frac{13\,333}{9 \times 102} = 14.5 \text{ lbs. per sq. in.};$$

while the rail was subjected to a maximum vertical bending moment of

$$\frac{6667\ (15 \times 39^2 + 45 \times 9^2)}{54^2} = 49\,063 \text{ inch lbs.},$$

producing a stress in the extreme fibers of its flange of

$$\frac{49\,063}{8.87} = 5543 \text{ lbs. per sq. in.}$$

Today, with the 100-pound, A. R. A. type B rail on the same crossties, spaced 22 in. on centers, with Cooper's E-60 Typical Consolidation Locomotive loading of four 60 000-pound axle loads on 5 ft. centers, considering the weight of the driving wheels distributed uniformly over 20 ft. of track; there is distributed to each of the supporting crossties,

$$\frac{4 \times 60\,000}{10.91} = 22\,000 \text{ lbs.}$$

and, through the bases of the crossties to the ballast, a pressure of

$$\frac{22\,000}{9 \times 102} = 24 \text{ lbs. per sq. in.;}$$

while the rail is subjected to a maximum vertical bending moment of

$$\frac{11\,000\,(11 \times 49^2 + 33 \times 27^2 + 55 \times 5^2)}{60^2} = 158\,409 \text{ inch-pound}$$

producing a stress in the extreme fibers of its flange of

$$\frac{158\,409}{15.7} = 10\,090 \text{ lbs. per sq. in.;}$$

or, for both ballast pressure and fiber stress, almost double the amounts obtaining in the early eighties of the last century.

These calculations are based on a "fixed" span equal to the center to center distance from one driving wheel to the next, 54 in. (Figure 3) for the Wilson and 60 in. (Figure 4) for the Cooper loading; considering the wheels as the abutments and the pressure of the crossties on the ballast as the loading; and one of the driving wheels being located midway between a pair of crossties, as that is the point of maximum lateral bending moment, under which conditions the flanges of the rail experience tension at the wheel contacts and compression between them. This conforms to the principle, not generally appreciated, established and enunciated by Dr. P. H. Dudley, Consulting Engineer, New York Central Lines, "that the wheel load spacing of the equipment controls the spans of the bending rails on the flexible crossties in the ballast, rather than their spacing under the rail;" in other words, THE RAIL AS A GIRDER SHOULD SATISFY THE SPAN FROM WHEEL TO WHEEL RATHER THAN THE SPAN FROM CROSSTIE TO CROSSTIE.

But what of the spans no rail yet produced or contemplated could satisfy as a girder; such, for instance, as the 18 ft. one influenced by the weight of the four 24 000-pound axle loads of the Wilson, and the 20 ft. one influenced by the four 60 000-pound axle loads of the Cooper Typical Consolidation Locomotive loadings? Considering the four 12 000-pound wheel loads of the

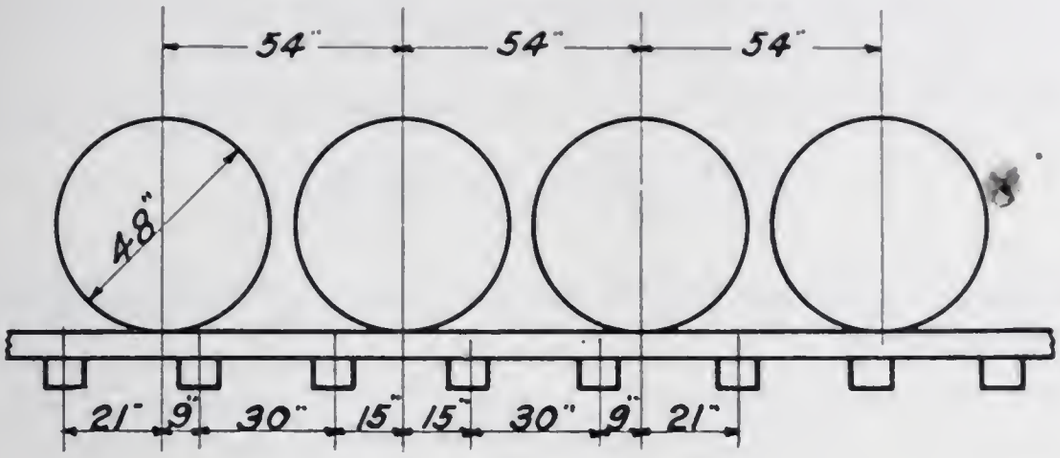

FIGURE 3

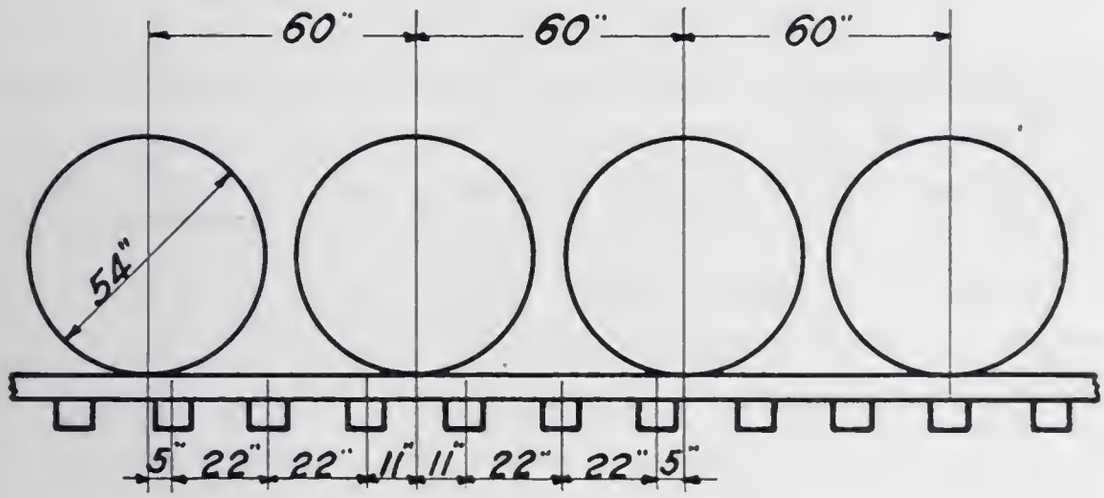

FIGURE 4

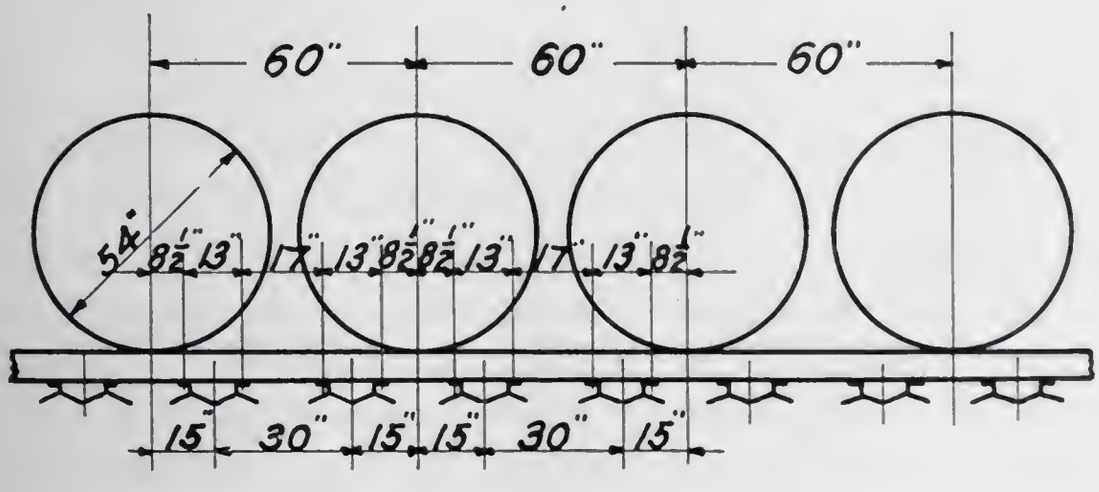

FIGURE 5

former as an uniformly distributed load of 48 000 pounds on a "fixed" span of 18 ft. without intermediate supports, there would be produced a maximum vertical bending moment of

$$\frac{48\,000 \times 216}{12} = 864\,000 \text{ in. lbs.},$$

resulting in a stress in the extreme fibers of the flange of the 70-pound rail of

$$\frac{864\,000}{8.87} = 97407 \text{ lbs. per sq. in.};$$

and were such a stress conceivable, in a maximum vertical deflection, of

$$\frac{216^2 \times 97\,407}{32 \times 29\,000\,000 \times 2.22} = 2.12 \text{ in.};$$

while, considering the four 30 000-pound wheel loads of the latter as an uniformly distributed load of 12 000 lbs. on a "fixed" span of 20 ft. there would be produced a maximum vertical bending moment of

$$\frac{120\,000 \times 240}{12} = 2\,400\,000 \text{ in. lbs.},$$

resulting in a stress in the extreme fibers of the flange of the 100-pound rail of

$$\frac{2\,400\,000}{15.7} = 152\,866 \text{ lbs. per sq. in.}$$

and a maximum vertical deflection of

$$\frac{240^2 \times 152\,866}{32 \times 29\,000\,000 \times 2.63} = 3.61 \text{ in.},$$

which proves conclusively that the girder strength of the rail is of little benefit for such extended spans.

Accepting as a reasonable assumption, or at least as a ratio readily convertible where exact data is obtainable, a vertical compressibility for the ballast in the relation of 1 inch for each 100 lb. per sq. in. pressure on the bases of the crossties, and considering the locomotive simply as a structure with each axle load sustained by its proportion of the crossties, those of the early eighties would depress

$$\frac{13\,333}{9 \times 102 \times 100} = 0.145 \text{ in.};$$

while those of today would depress

$$\frac{22\,000}{9 \times 102 \times 100} = 0.24 \text{ in.}$$

below the trackmen's surface under the weights of their respective locomotive driving wheels. These results do not differ materially from those obtained by Dr. Dudley, who by means of his autographic indicator recorded the "transitory depression under the moving locomotive from the trackmen's surface of the rails, crossties, ballast and subgrade to their loaded position in the equilibrium depression with specific deflections under the wheel contacts" and, by means of his autographic Stremmatograph, measured specific unit stresses in the fibers of the rail.

Figure 3 illustrates the wheel contacts of the Wilson drivers in relation to crossties spaced 30 in. on centers; Figure 4 the wheel contacts of the Cooper E-60 drivers in relation to crossties spaced 22 in. on centers; Figure 5 the same Cooper E-60 drivers in relation to 20-inch crossties spaced 30 in. on centers, of which more anon, and Figure 6 illustrates the undulatory vertical curves in the rail resulting from the compression of the ballast under the wheel loads of a modern locomotive.

Admitting that the reactions of the flexible superstructure of the locomotive through wheel contacts upon the elastic roadbed produce such undulatory vertical curves as are illustrated in Figure 6; and at the same time convinced that the girder strength of the rail has but little effect upon the extended spans they influence, it may be premised, from the principle that loads on a girder invariably produce deflections with their fiber stresses, that inversely, deflections resulting from said transitory depressions are bound to be accompanied by their appropriate fiber stresses.

Therefore, assuming the vertical sweep or deflection for the 18 ft. influenced by the weight of the driving wheels of the Wilson loading to be 0.0725 in. or half their depression below the trackmen's surface; and that for the 20 ft. influenced by the weight of the driving wheels of the Cooper loading in like manner to be 0.12 in., and using the deflection formula for a uniformly loaded

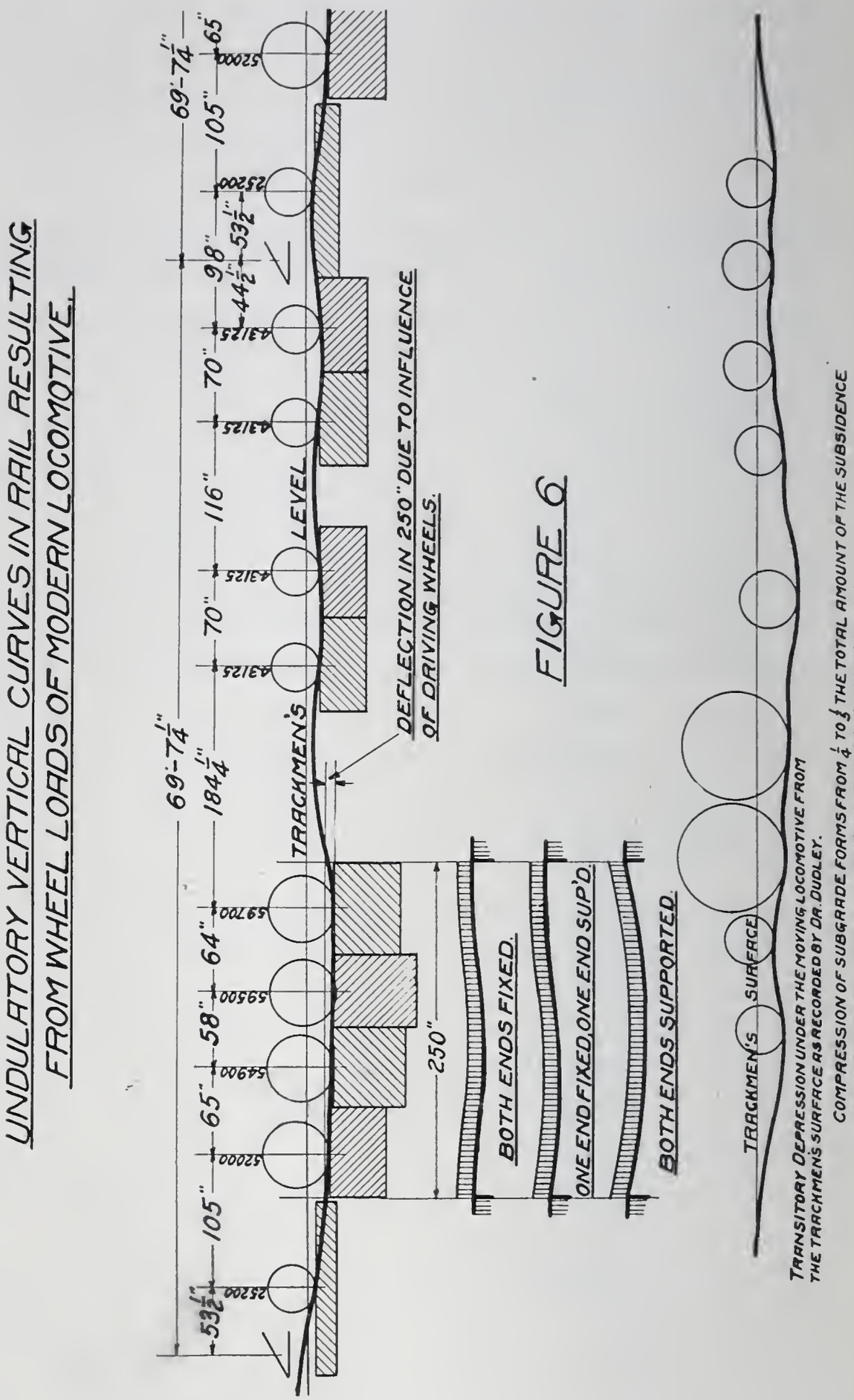
UNDULATORY VERTICAL CURVES IN RAIL RESULTING FROM WHEEL LOADS OF MODERN LOCOMOTIVE.
69'-7 1/4"
105"
65"
52000
25200
53 1/2"
98"
44 1/2"
43125
70"
116"
184 1/4"
64"
59700
59500
54900
LEVEL
TRACKMEN'S
DEFLECTION IN 250" DUE TO INFLUENCE OF DRIVING WHEELS.
250"
BOTH ENDS FIXED.
ONE END FIXED, ONE END SUP'D.
BOTH ENDS SUPPORTED.
TRACKMEN'S SURFACE
TRANSITORY DEPRESSION UNDER THE MOVING LOCOMOTIVE FROM THE TRACKMEN'S SURFACE AS RECORDED BY DR. DUDLEY.
COMPRESSION OF SUBGRADE FORMS FROM 1/4 TO 1/3 THE TOTAL AMOUNT OF THE SUBSIDENCE OF THE RAILS FROM THEIR UNLOADED TO THEIR LOADED POSITION.

FIGURE 6

span with one end fixed and one end supported, whose curve is most nearly approximated, there would result in the fibers of the flanges of the rails a stress per sq. in. of

$$\frac{0.0725 \times 23.15 \times 29\,000\,000\,y}{216^2} = 1043\,y$$

for the Wilson loading, and

$$\frac{0.12 \times 23.15 \times 29\,000\,000\,y}{240^2} = 1\,399\,y$$

for the Cooper loading; where y = the vertical distance from the center of gravity of the rail to the fiber in question, producing in the extreme fibers of the flange of the 70-pound rail a stress of

$$1043 \times 2.22 = 2310,$$

and in the extreme fibers of the flange of the 100-pound rail one of

$$1399 \times 2.63 = 3780 \text{ lbs. per sq. in.}$$

but these results are for track in perfect condition, and are bound to be multiplied for winter heavings and for track out of surface and alignment; which leads me to propound the principle, not generally accepted, that SERIOUS STRESSES ARE INDUCED IN THE RAIL BY THE HEAVING AND THE WEAVING OF THE TRACK.

In structural designing, for crane runways and the like, subjected to rolling and swinging loads, it is the practice to assume a percentage of the moving load as a lateral thrust, 20% being a customary figure. But, owing to steam road wheels being single flanged, the whole load on an axle, 24 000 lbs. in the case of the Wilson and 60 000 lbs. in the case of the Cooper loading, may affect one rail. Twenty percent of 24 000 is 4800, and of 60 000 is 12 000 lbs. These lateral thrusts would produce maximum lateral bending moments of

$$\frac{4800 \times 30}{8} = 18\,000 \text{ in. lbs.}$$

in the former case and of

$$\frac{12\,000 \times 22}{8} = 33\,000 \text{ in. lbs.}$$

in the latter; and being applied say one-half inch below the tops of the rails, also would produce torsional or polar moments equal

to the lateral thrust times the vertical distance from its point of application to the center of gravity of the rail:

$$4800\,(2.4 - 0.5) = 9120 \text{ in. lbs.}$$

for the Wilson loading, and

$$12\,000\,(3.01 - 0.5) = 30\,120 \text{ in. lbs.}$$

for the Cooper loading. The bottom corners of the flanges of the 70 and 100 lb. rails have the following section moduli:

	Vertical	Lateral	Polar
70-lb. A. S. C. E.	8.87	2.02	7.60
100-lb. A. R. A. B.	15.70	3.68	14.12

so now we can combine the stresses to which steam road rails are subjected in the formula,

$$\text{Stress in any fiber} = 1.25\left(\frac{Mv}{Sv} + \frac{Mh}{Sh} + \frac{Mp}{Sp} + Cy\right)$$

where 1.25 includes 25% for impact; Mv, Mh and Mp are respectively the maximum vertical, lateral and polar bending moments; Sv, Sh and Sp, respectively the vertical, lateral and polar section moduli for the fiber in question; C is the transitory depression factor, say 1050 for the Wilson and 1400 for the Cooper loading; and y is the vertical distance from the center of gravity of the rail to the fiber in question. By means of this formula, we can compare the stresses in the extreme fibers of the flanges of the 70-pound and 100-pound rails, as follows:

$$\text{70-lb. rail, } 1.25\left(\frac{49\,063}{8.87} + \frac{18\,000}{2.02} + \frac{9120}{7.6} + 1050 \times 2.22\right) = 22\,466$$

$$\text{100-lb. rail, } 1.25\left(\frac{158\,409}{15.7} + \frac{33\,000}{3.68} + \frac{30\,120}{14.12} + 1400 \times 2.63\right) = 31\,090$$

IN THE FACE OF SUCH AUGMENTED STRESSES, WHAT BECOMES OF THE CONTENTION THAT INCREASE IN RAIL FAILURES IS DUE TO DETERIORATION IN RAIL MANUFACTURE?

The matter of lateral thrusts is one of grave dispute, Mr. Cushing for the P. R. R. having obtained on normal track results ranging from 8500 lb. at a speed of 75.5 miles an hour to 13 000

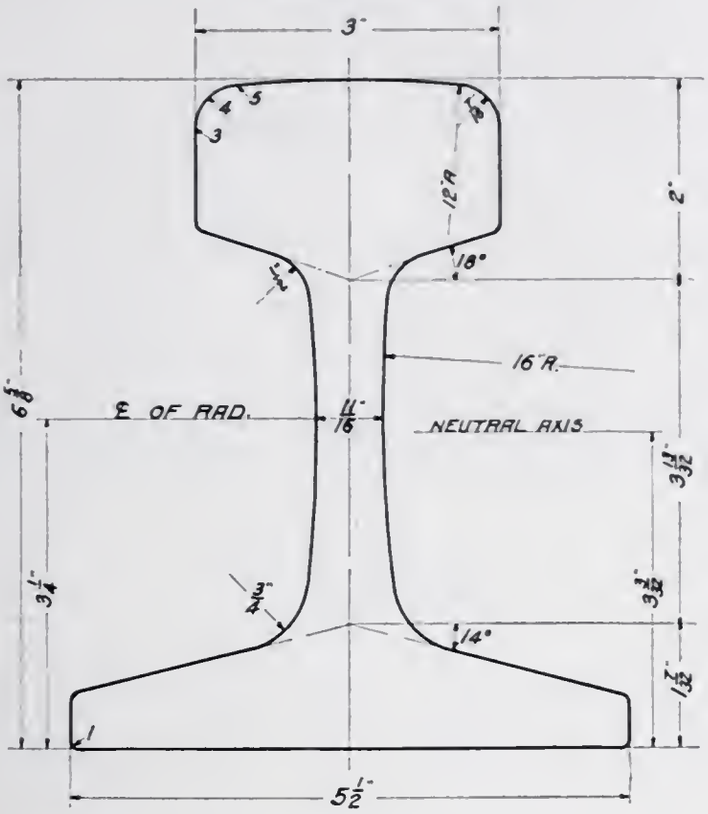

FIGURE 7

lb. at 87.7 miles an hour, while Mr. George L. Fowler (*Railway Age Gazette,* June 11 and August 20, 1915) obtained several of 15 000 lbs. on normal track, and over 30 000 lbs. in several instances on a sharp curve. But from the nature of his apparatus, recording by the blow of a hard ball on a soft plate, I am convinced that his results include impact. And note when his 15 000 for normal track is divided by 1.25, my 12 000 lbs. is obtained.

To meet these increased fiber stresses heavier rails are required, and several steam roads already have adopted generously augmented sections, such as the Pennsylvania Railroad's 130-pound and the Lehigh Valley's 136-pound rails. The bottom corners of the flanges of these two rails have the following section moduli:

	Vertical	Lateral	Polar
130-lb. P. R. R.	23.56	5.05	20.94
136-lb. Lehigh Valley	28.86	5.09	23.51

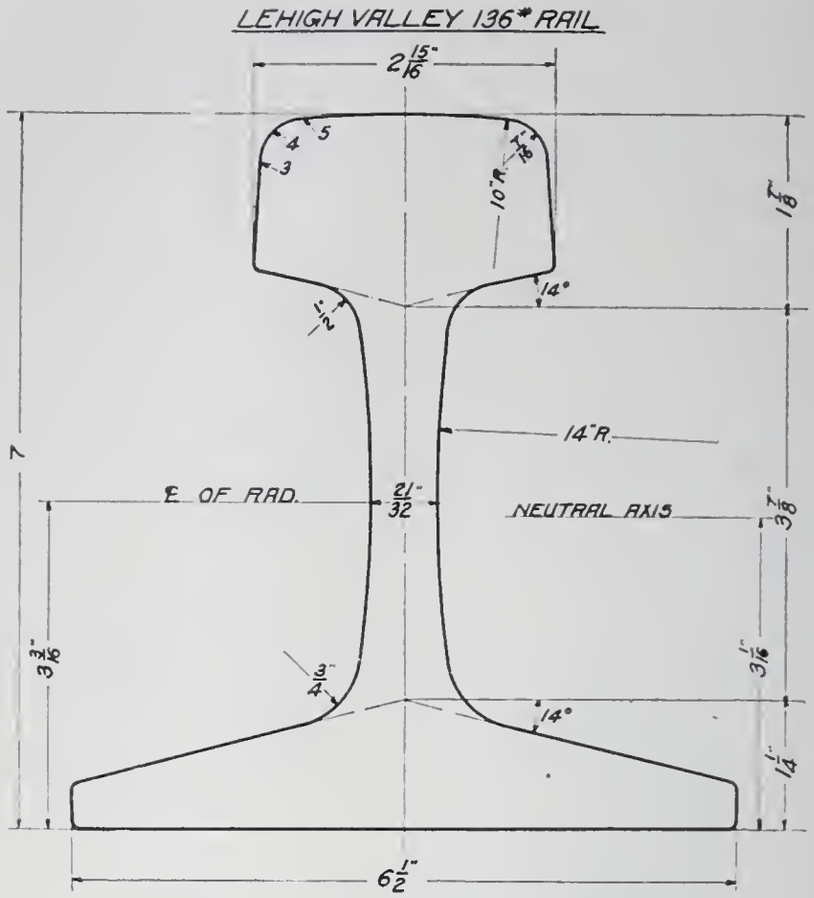

FIGURE 8

and polar moments: For the 130-pound rail, of

$$12\,000\ (3.53—0.5) = 36\,360,$$

and for the 136-pound rail, of

$$12\,000\ (3.94—0.5) = 41\,280 \text{ in. lbs.},$$

based on the Cooper loading; which, using the formula, give stresses in the flanges of the

130-lb. P. R. R.—

$$1.25\left(\frac{158\,409}{23.56} + \frac{33\,000}{5.05} + \frac{36\,360}{20.94} + 1400\times 3.09\right) = 24\,151$$

136-lb. L. V.—

$$1.25\left(\frac{158\,409}{28.86} + \frac{33\,000}{5.09} + \frac{41\,280}{23.51} + 1400\times 3.06\right) = 22\,515$$

But should the transitory depression factor be trebled to cover winter heavings and track out of surface, the 100-pound, 130-pound and 136-pound rails would compare as follows:

$$100\ lb. = 31\,090 + 2 \times 1.25 \times 1400 \times 2.63 = 40\,295$$
$$130\ lb. = 24\,151 + 2 \times 1.25 \times 1400 \times 3.09 = 34\,966$$
$$136\ lb. = 22\,515 + 2 \times 1.25 \times 1400 \times 3.06 = 33\,225$$

and were we in addition to double the lateral thrust for the condition of a sharp curve, would compare as follows:

$$100\ lb. = 40\,295 + 1.25\,(8967 + 2133) = 54\,170$$
$$130\ lb. = 34\,966 + 1.25\,(6535 + 1736) = 45\,305$$
$$136\ lb. = 33\,225 + 1.25\,(6483 + 1756) = 43\,524$$

my object in investigating for such severe conditions being to develop how they compare as the elastic limit of rail steel is approached.

136# SQUAT RAIL

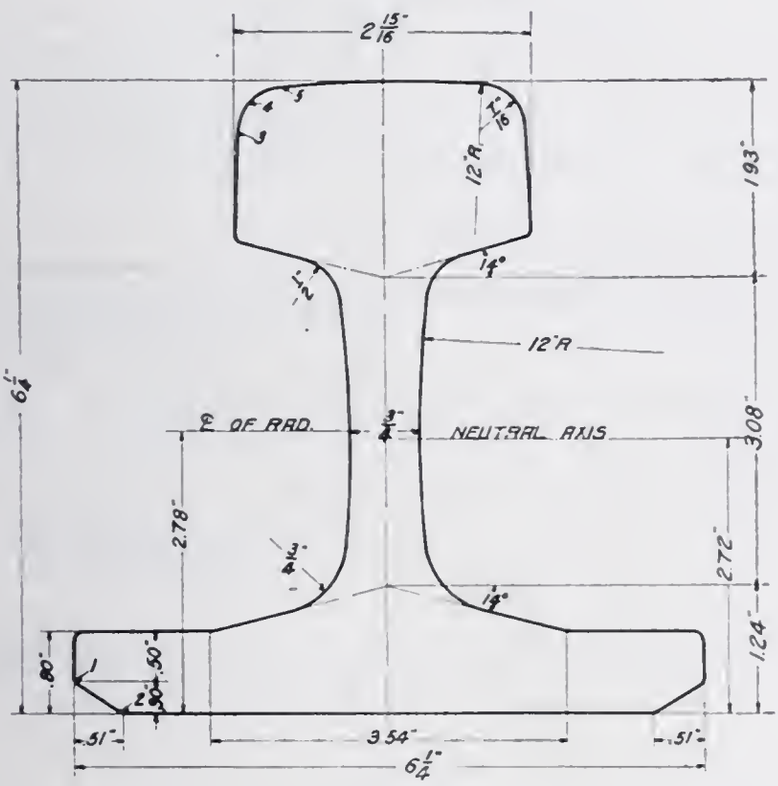

FIGURE 9

As an improvement, the 136-pound squat rail illustrated in Figure 9 was designed; the flange of which has the following section moduli: Vertically, 27.01; laterally, 5.92; polar, 21.23; and whose polar moment is

$$12\,000\,(3.53 - 0.5) = 36\,360;$$

whose flange stress for normal conditions is

$$1.25\left(\frac{158\,409}{27.01} + \frac{33\,000}{5.92} + \frac{36\,360}{21.23} + 1400 \times 2.42\right) = 20\,675$$

for treble depression is

$$20\,675 + 2 \times 1.25 \times 1400 \times 2.42 = 29\,145$$

and for double lateral thrust in addition is

$$29\,145 + 1.25\,(5574 + 1713) = 38\,254,$$

showing it to be 14% stronger than the Lehigh Valley 136-pound rail.

To reduce the pressure of the crossties on the ballast, and thereby the transitory depression of the track, the 20-inch crosstie illustrated in Figure 10 was designed; which if 8 ft. 11 in. long and spaced 30 in. centers, would transmit through its base to the ballast,

$$\frac{30\,000}{20 \times 107} = 14 \text{ lbs. per sq. in.};$$

half of which, or 0.07 in., would represent the deflection for the 20 ft. span influenced by the four driving wheels of the Cooper loading. Hence by the deflection formula,

$$\frac{0.07 \times 23.15 \times 29\,000\,000\,y}{240^2} = \text{the depression factor or } 816\,y$$

As the crossties are 30 in. centers, the maximum vertical bending moment becomes

$$\frac{15\,000\,(15 \times 45^2 + 45 \times 15^2)}{60^2} = 168\,750 \text{ in. lbs.};$$

and as the fastenings on the crossties are 13 in. centers, the maxi-

20" TIE

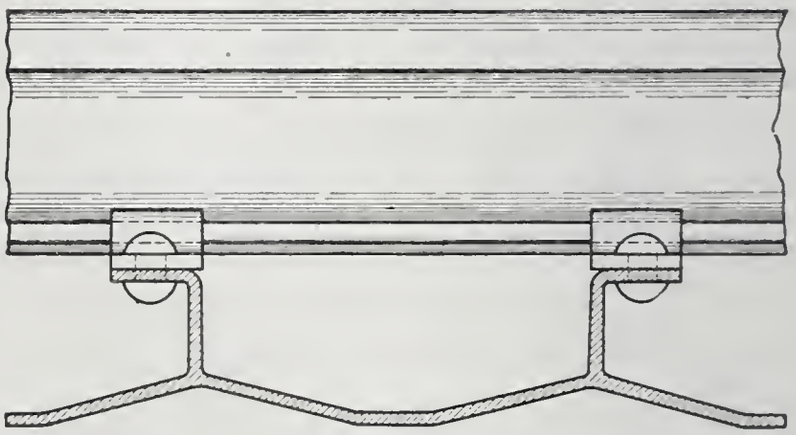

FIGURE 10

RIVETED JOINT & FASTENING

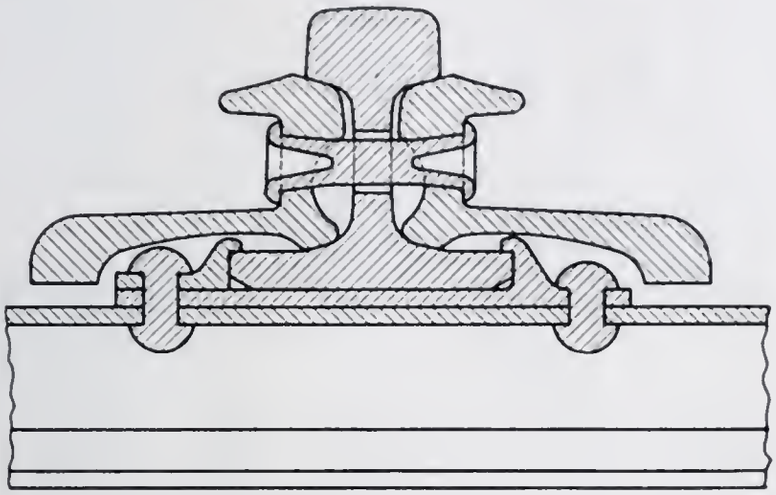

FIGURE 11

mum lateral bending moment becomes

$$\frac{12\,000 \times 17}{8} = 27\,625 \text{ in. lbs.}$$

Substituting in the formula, the following flange stress is obtained for the 136-pound squat rail on 20 in. crossties, 30 in. centers,

$$1.25\left(\frac{168\,750}{27.01} + \frac{27\,625}{5.92} + \frac{36\,360}{21.23} + 816 \times 2.42\right) = 18\,253 \text{ lb. per sq. in.}$$

and for the condition of double lateral thrust in addition to treble transitory depression factor,

$$18\,253 + 1.25\,(4666 + 1713 + 3950) = 31\,164 \text{ lbs. per sq. in.},$$

or 40% stronger than the 136-pound Lehigh Valley rail on its 7 x 9 in. x 8½ ft. crossties, 22 in. centers.

Figures 7, 8 and 9 are cross-sections respectively of the 130-pound P. R. R., 136-pound Lehigh Valley and 136-pound squat rails. The 136-pound squat rail has the outside bottom corners of its flanges chamfered; which, notwithstanding the loss in cross-section, increases its strength about 2½%, compared with the same rail unchamfered, under the particular combination of vertical, lateral and polar and depression stresses to which steam road rails are subjected. Figure 12 is a tabulation setting forth a comparison of the stresses in fibers 1, 2, 3, 4 and 5 for the 130-pound P. R. R., 136-pound Lehigh Valley and 136-pound squat rails, under the conditions of Cooper's E-60 loading and on 7 x 9 in. x 8½ ft. crossties, 22 in. centers.

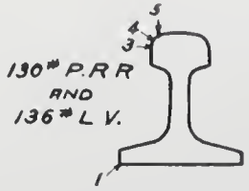

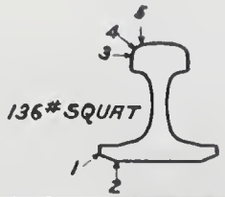

COMPARISON OF FIBER STRESSES IN 130# P.R.R.–136# LEHIGH VALLEY AND 136# SQUAT RAILS. UNDER COOPER'S E-60 LOADING AND ON 7"×9"×8'-6" WOODEN CROSSTIES, 22" CTRS.

	FIBER No 1				FIBER No 2		FIBER No 3				FIBER No 4				FIBER No 5			
	SECTION MODULUS	130# P.R.R.	136# L.V.	136# SQUAT	SECTION MODULUS	136# SQUAT	SECTION MODULUS	130# P.R.R.	136# L.V	136# SQUAT	SECTION MODULUS	130# P.R.R.	136# L.V.	136# SQUAT	SECTION MODULUS	130# P.R.R.	136# L.V.	136# SQUAT
VERT. BEND'G. MOM.	23.56	6724					23.95	6614			21.73	7290			20.92	7572		
$11000(11\times\frac{49}{2}+33\times\frac{27}{2}+55\times\frac{5}{2})$	28.86		5489				25.53		6205		23.43		6761		22.65		6994	
$\frac{}{60}$ =158409	27.01			5865	24.03	6592	21.50			7368	19.51			8119	18.78			8435
LATERAL BEND'G. MOM.	5.05	6535					9.27	3560			10.15	3251			13.11	2517		
$\frac{12000\times 22}{8}=33000$	5.09		6483				11.74		2811		12.93		2552		17.06		1934	
	5.92			5574	7.07	4668	13.26			2489	14.60			2260	19.37			1704
POLAR MOMENT																		
12000(3.53-0.5)=36360	20.94	1736					25.58	1422			23.95	1518			23.82	1526		
12000(3.94-0.5)=41280	23.51		1756				28.04		1472		26.35		1567		26.10		1582	
12000(3.53-0.5)=36360	21.23			1713	22.24	1635	25.11			1448	23.42			1553	23.23			1565
TRANSITORY DEPRESSION FACTOR	VERT. DIST. FROM C OF G TO FIBER				VERT. DIST. FROM C. OF G TO FIBER		VERT. DIST. FROM C. OF G TO FIBER				VERT. DIST. FROM C. OF G TO FIBER				VERT. DIST. FROM C. OF G. TO FIBER			
1400 ×	3.09	4326					3.04	4256			3.35	4690			3.48	4872		
1400 ×	3.06		4284				3.46		4844		3.77		5278		3.90		5460	
1400 ×	2.42			3388	2.72	3808	3.04			4256	3.35			4690	3.48			4872
SUMMATION No 1		19321	18012	16540		16703		15852	15332	15561		16749	16158	16622		16487	15970	16576
ADD FOR TREBLE DEPRESSION		8652	8568	6776		7616		8512	9688	8512		9380	10556	9380		9744	10920	9744
SUMMATION No 2		27973	26580	23316		24319		24364	25020	24073		26129	26714	26002		26231	26890	26320
ADD FOR DOUBLE		6535	6483	5574		4668		3560	2811	2489		3251	2552	2260		2517	1934	1704
LATERAL THRUST		1736	1756	1713		1635		1422	1472	1448		1518	1567	1553		1526	1582	1565
SUMMATION No 3		36244	34819	30603		30622		29346	29303	28010		30898	30833	29815		30274	30406	29589
25% FOR IMPACT		9061	8705	7651		7656		7337	7326	7003		7725	7708	7454		7569	7602	7397
GRAND TOTAL		45305	43524	38254		38278		36683	36639	35013		38623	38541	37269		37843	38008	36986

FIGURE 12

A great objection to the use of such a low rail as here advocated is its small fishing distance, which is not sufficient for properly proportioned splice bars attached by means of the customary track bolts, for the minimum height of a rail is determined largely by the clearances necessary for the manipulation of the track bolt nut, the diagonal of which establishes the minimum distance from the track bolt center to the flange of the splice bar; and any device that will permit an appreciable reduction of said distance is worthy of consideration.

The addition of a top flange to the splice bar also is desirable, as the latter then can be designed with the minimum fishing distance for a given strength and having its center of gravity nearer the neutral axis of the rail, with a vertical flexibility more closely approximating that of the rail. However, it could not be attached by means of ordinary track bolts, as there would not be clearance for the nut wrench; nor would an ordinary rivet be practicable unless its shank or body portion were encased in a pipe separator or were of greater diameter than its head portions, neither of which expedients would permit subsequent tightening of the joint.

To overcome these difficulties a hollow rivet was devised, in using which the splice bars can be driven home at the pressure desired by means of a compressor or riveting bull suspended from the boom of a derrick car and obtaining its air from a locomotive; the headed end of the rivet forced into its countersink and then its opposite end expanded and headed, while for tightening the joint the splice bars again can be compressed by the same bull and the same rivets further expanded and headed, all of which can be done cold and would require but a medium-sized compressor or riveting bull, or the whole equipment might be mounted on a handcar. When replacements became necessary, the rivets readily could be backed out by the same bull or, for quick repairs, by means of a screw punch or similar device, which also could accomplish the expanding and heading of rivets. True, such backed-out rivets would have to be scrapped and new ones driven in their places, but such a loss would be insignificant in comparison with the benefits to be derived from the use of squat rails.

Figure 10 illustrates the 20 in. crosstie, and Figure 11 the riveted joint and fastenings.

When the rail is so seriously stressed by such slight undulations, when what is denominated a low rail turns out to be indeed a high one in comparison with the 60 to 100 pounders that served so valiantly in the past, when all this calculating, comparing and devising has succeeded in shortening those critical vertical distances from its center of gravity to its most imperiled fibers by but insignificant decimals of an inch, it may readily be appreciated how essential is the perpetual and proper maintenance of the roadbed, and what danger is involved in running from hard to soft spots, from embankments to bridges and ledges, and over ballast frozen in spots, which latter probably accounts for the preponderance of winter rail failures.

All the romance of the rails clings to the knights of the punch and lever, conductors and engineers, while the lonely trackwalker and lowly trackmen, rain and shine, winter and summer, must watch and ward, resurface and realign, through quagmire and forest, desert and canon, unceasingly and all unnoticed and unsung.

And at this very moment, perhaps, in Flanders, in Picardy, in Champagne, fierce offensives hesitate and halt, while anonymous armies of section hands and trackmen strive feverishly against time to advance, over gaping craters and blasted trenches, those rail heads upon which victory depends.

And we, in our hour of peril, to head the Nation's railway mobilization, choose one whose career as chief of a great railway system and as patriotic arbitrator but exemplifies the insight into human affairs and the practical railroad experience acquired when he served as a humble section hand at the munificent wage of a dollar a day. Will you not join in a rising tribute to the Prince of Railroaders, Daniel Willard?

DISCUSSION

Mr. Gustav Lindenthal:* The pith of the paper appears to be that a rail with a heavier and wider base than that used in the rail of the 130 and 136 pound section, respectively (P. R. R. and L. V. sections), offers greater lateral strength for resisting side pressure and side blows in combination with the vertical pressures and impact.

The paper also shows a new form of steel tie and rail fastenings to such new form. It also discusses the deflections of the rail and the compressibility of the stone ballast when the heavy wheel loads from drivers deflect the rail below the trackmen's level. The reasoning in the paper is accompanied by computations of strength and deflections on certain assumptions.

It is, of course, true that the steadily increasing wheel loads, which have already reached 35 000 lbs. per driving wheel, make heavier rails necessary. Such rails should also be able to resist the lateral impact upon them, which has been observed to be quite large.

While theoretical discussions of this kind are often helpful, the most reliable information as to sufficiency of strength in rails must be obtained from experience.

Since fractures in rails occur with ordinary good steel, it is a sign that the rails are too weak for their work. It will not do to lay the entire blame for fractures upon poor steel in the rails. That there is sometimes poor steel in them no one can deny, but fractures also occur in rails having perfectly sound steel. If the rail manufacturer furnishes a quality of steel that meets the rail specifications and the rails are still breaking, the only remedy is heavier rail, and it would appear that a rail to be proportionately as strong under the present driver wheel loads as it was 40 to 50 years ago should weigh about 200 lbs. per yard. If any railroad will get rails of 20 sq. in. cross section, it is pretty certain that fracture of rails would stop altogether.

As regards a strong form for resisting side thrusts, I believe that the inverted U rail (of the form herewith shown) would offer greater resistance and strength.

*Consulting Engineer, William St., New York, N. Y.

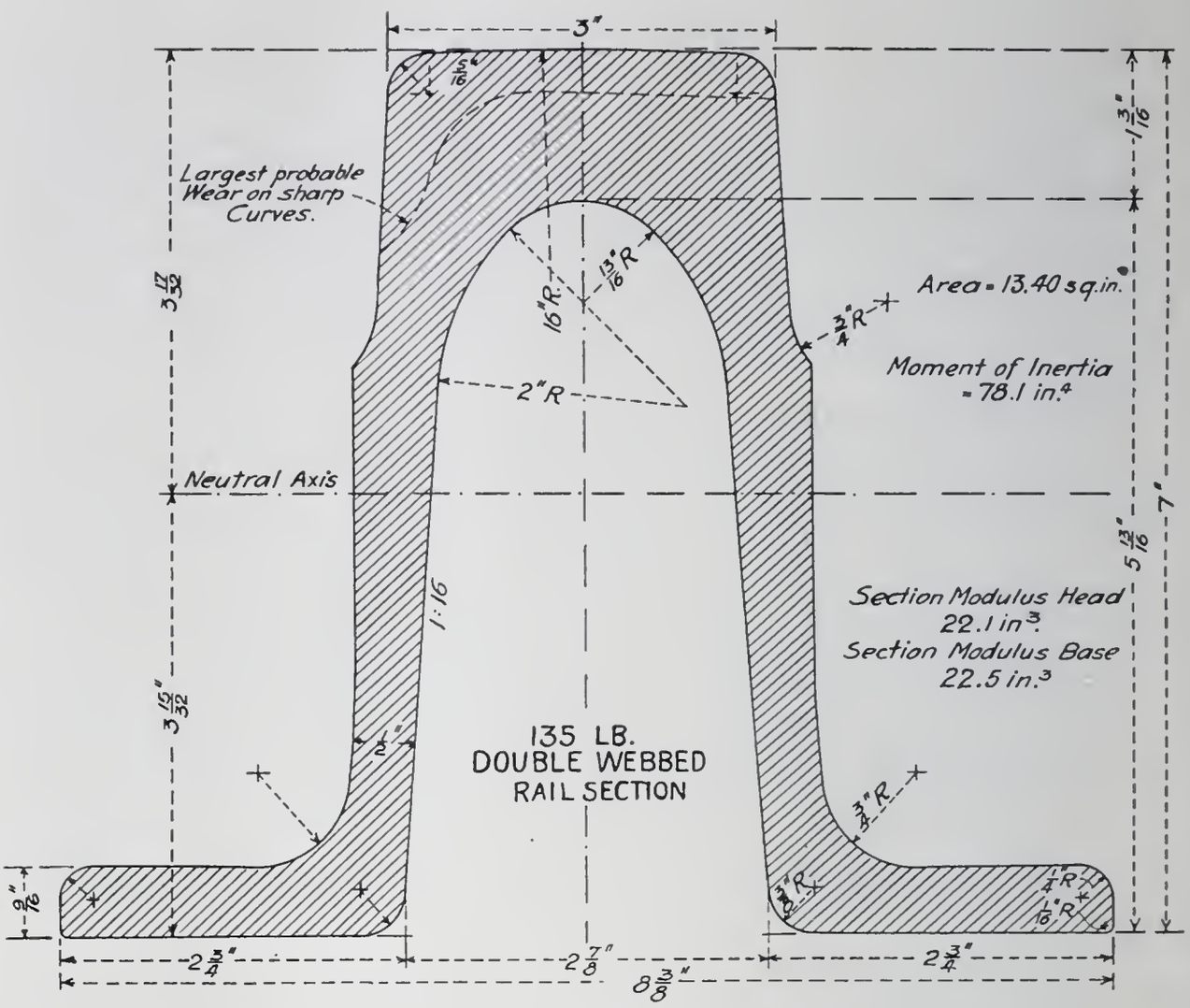

Fig. 1.

The form of steel tie shown in Figure 10, assuming that it can be readily made by rolling and pressing, would appear rather slight. In most experiments with steel ties the mistake has been made of having the metal too thin. It should not be less than 3/8 in. and would be much stouter with 1/2 to 3/4 in. thickness. A couple of years test with such ties would be instructive also in that respect.

The same is true of fastenings of rails to steel ties. Since rails must be able to slide on steel ties, the contact surfaces become worn, as shown by experience and prolonged tests. For that reason, it has been found advantageous to have between the rail base and the steel tie a plate of some form which can be removed when worn out without having to renew the whole steel tie.

As to the spacing of steel ties, their closeness will mostly depend upon facility of tamping, for which I believe trackmen want to have a minimum of eight inches. The fastening of the fish

plates to the rail by upset rivets rather than bolts is worthy of trial. Only practical experience with it in the track can show its fitness or want of it.

Mr. G. W. Vaughan:† The paper is based upon many unknown conditions, and a slight variation in any of these conditions would, of course, materially affect the results.

As a general fact, however, the chamfering of the rails raises the center of gravity of the section, which results in giving unit stresses on the upper and lower flanges a more uniform value, but not as economical.

It must be borne in mind that rails as manufactured are not an economical section theoretically. To make them an economical section theoretically would require too many changes in rolling stock. The most serious objection to squat rails lays in the lessened bearing area on the tie, which at the present time, as our rail-cut decks and ties give evidence, is not too great.

Concerning the joints. There would be some slight advantage theoretically if the broad flanges proposed on the angle bars were cut down to provide clearance for snow flangers. With the angle bars as proposed by Mr. Barbour it would be impossible, during winter months, to properly flange your track, which would result in very heavy track. The advantage, however, would be more marked in the suspended type of joint than in the supported joint.

There is no advantage in the tubular rivet, inasmuch as it becomes crooked when driven, unless made of soft iron and driven cold.

The temperature stresses could not be taken care of by rivets or any track changes made within any reasonable length of time, and in view of the above, I think that the splices and rails as recommended by Mr. Barbour are not of practical value.

Mr. George L. Fowler:* It gives me great pleasure to contribute what I can to the discussion of Mr. Barbour's able paper on "Broad Rails versus Deep Rails." In the matter of the ver-

†Engineer, Maintenance of Way, New York Central Railroad Company, New York City.

*Consulting Mechanical Engineer, New York, N. Y.

tical stresses to which he pays more particular attention, I can contribute little or nothing except in the way of an inference derived from my investigations of the intensities of lateral stresses. I can make no criticism of his mathematical analyses of those stresses, and my only suggestion would be to the effect that it is not altogether safe to depend upon such an analysis when not based upon actual investigations in the field. My own experience is that *a priori* assumptions of what a machine, locomotive or car will do are sure to be upset by field investigations. The reason is, of course, quite obvious, and that is the multiplicity of variables that enter into the production of the final resultant. Mr. Barbour does not, however, jump to unwarranted conclusions, inasmuch as he bases his calculations upon the work of Dr. P. H. Dudley.

Later he refers to the "grave dispute" concerning lateral thrust, and well he may call it "grave dispute," though I should prefer to say "grave uncertainty." In my own investigations on lateral thrust I used two types of apparatus. One, as Mr. Barbour describes, used a hardened steel ball resting on a steel plate. This covered a length of about 110 ft. of track and was used on tangents only. It took the whole locomotive and recorded the maximum or accumulated thrust. The other was a hydraulic scale that weighed and recorded the lateral thrust of each wheel as it passed and has been successfully used up to speeds of 65 miles per hour. I have confined its use, for the most part, to the outer rails of curves, though it has been used on a tangent track.

The ball and plate apparatus was practically the same as that used by Mr. Cushing, of the Pennsylvania Railroad, and, as should be expected, my results check very closely with his.

I will not weary you with a recital of details, but wish to say that in my work on a tangent track I put humps in one and both rails, elevating one rail above the other, and introduced various other modifications of bad track conditions.

On the normal standard level track, one thing stood out with striking and invariable prominence, and that was the apparent effect of track condition on the stress. If a light or heavy blow were received at any one point a similar blow would be received there invariably at every trial. The engines tried were Mikados,

ten-wheeuers, Pacifics and consolidations, and the speeds at which the apparatus was traversed were 30, 40, 50 and 60 miles per hour. Yet, regardless of speed or character of locomotive, the track received its heavy blows at the same points. If, then, this holds for lateral thrusts it seems safe to conclude that it will hold for vertical stresses also. Of course, lateral stresses increase with speed.

The work was too well advanced before this peculiarity was detected, else an attempt would have been made to determine what might be the track condition that induced a light or heavy blow. Certainly if I ever have another opportunity of continuing this investigation, that point will receive most careful attention. But, as it stands now, the track condition, it seems to me, should share with the locomotive the responsibility for imposed stresses.

In one case where I was investigating the effect of certain electric locomotives on the track, very heavy blows were delivered when the track had been distorted. Not being satisfied that this was altogether due to the locomotive weights, I analyzed the effect that should have been obtained from the gyroscopic action of the heavy revolving armatures and found that I obtained results so startlingly near to those actually measured that I would not dare publish them without further investigation.

To sum up the matter of lateral thrust on a tangent track I have come to the following tentative conclusions. I say "tentative" because the work has not yet been carried to a point where the conclusions reached can be said to have been demonstrated.

The probability is that the blow delivered or the stress imposed at any particular point is dependent more upon the condition of the roadbed than of the locomotive. This is shown by the marked similarity of the diagrams of any particular locomotive, whereon it will be seen that the heavy and light blows are apt to occur at the same unit respectively, regardless of the speed at which the engine may be running. This checks with observations made elsewhere.

There is no tendency for locomotives to nose, that is, go from one rail to the other at regular or irregular intervals, and in so doing to put a heavy pressure on one rail while there is a light one on the other. Nor is it usual when the engine or wheels come

up against the rail for the pressure to increase gradually over a number of ties. The maximum pressure is apt to follow a comparatively low pressure on the same rail. In fact, it is quite characteristic of the diagrams to show an excessively high pressure immediately succeeding an abnormally low one.

A goodly amount of side play in the axle boxes evidently serves to relieve the lateral thrust of the wheel on the rail. It is as though the wheels and axles were free to move from side to side of the track while the main body of the engine continued on in a straight line undisturbed by the side movement of the wheels.

Data regarding the relative ease of movement of engines fitted with wedge and swing link trucks respectively is not conclusive, but it seems to show that the swing link truck is the easier on the track.

Judging from the diagrams presented, the order of severity of stresses put upon the rails by the different classes of locomotives tested, indicate that they stand in the following order:

Ten-wheelers,
Mikados,
Pacifics,
Consolidations,

increasing from the first to the last.

As already intimated, track conditions are evidently of great importance in the development of the lateral stresses, but no data has been obtained showing what the effect of track deflection or yielding in detail may have upon the lateral stresses, nor was any determination possible from the data obtained as to the effect of rail joints. There were, of course, no low joints on the apparatus used.

As far as the riding qualities of the engine are concerned or the development of lateral stresses, a short hump or elevation of one rail has no appreciable effect, even though that rise be as much as ¾ in. With two humps, one on each rail and alternated, so that the engine is not on both at the same time, there is an appreciable rise in the intensity of the lateral stresses. With three humps, two on one rail and one on the other, alternated in the same manner, the engine will be given a rolling motion, which may become dangerous at high speeds, and which will produce a

very marked increase in the intensity of the lateral stresses on the rail.

Where one rail is elevated above the other for a considerable distance, giving the springs time to lift one side of the engine and come to a state of equilibrium, the effect is to cause the engine to strike against the rail, in which the hump is located, when it leaves the same. This may be followed by a rebound against the other rail. A widening of the gauge tends to increase the lashing of the engine and, with it, the intensity of the lateral stresses imposed.

Contrary to its effect on curves, there is no appreciable increase of lateral thrust caused by backing a consolidation locomotive over a straight track. This seems to hold, at least, for moderate speeds.

While no demonstrative evidence to that effect was obtained, the impression left by these tests is that the track conditions are the controlling elements in track stresses. As to just what these may be, in detail, no statement can be made.

From these tests, as well as from those made on curves, it is evident that no prediction is yet possible as to what will be the effect of any individual locomotive, at any speed on any track, curve or straight. It can only be assumed that the performance of the engine will fall within the limits that are characteristic of its type.

Turning to the investigations on curves, here I find that the characteristic curve of lateral thrust is parabolic and does not at all accord with the results that would be obtained from calculations using the ordinary formula for centrifugal action. It can be expressed by the formula,

$$y^2 = 2\,p\,x$$

in which

y = the speed in miles per hour.
$x + a$ = total lateral thrust in pounds.

That is to say, a constant must be added to the thrust obtained from the calculation. This constant, as well as the value of $2\,p$, varies with the type of locomotive as well as the radius of curvature. In regard to the latter effect I found $2\,p$ to vary nearly as the squares of the radii of the curves on which the investiga-

tions were conducted. The constant a varied from 11 800 with ten-wheelers to 17 750 for Mikados.

In regard to the value of $2\ p$, the less this value the more rapid is the rise in lateral thrust.

As to the effect of the several wheels of the locomotives, the leading truck wheel puts the greatest lateral stress on the rail, and there is a certain sequence of pressures that is peculiar to each type. As an example of this I submit a diagram of the lateral wheel pressures of the consolidation locomotive. Here it will be seen that the maximum thrust is delivered by the leading truck wheel, followed by the second driver, so that the intensities follow in this order of wheel arrangement: 1, 3, 2, 4, 5.

In addition to locomotive records, I obtained some of tenders and cars. As I was not investigating cars, these must be considered as possibilities rather than average results. The sleeping

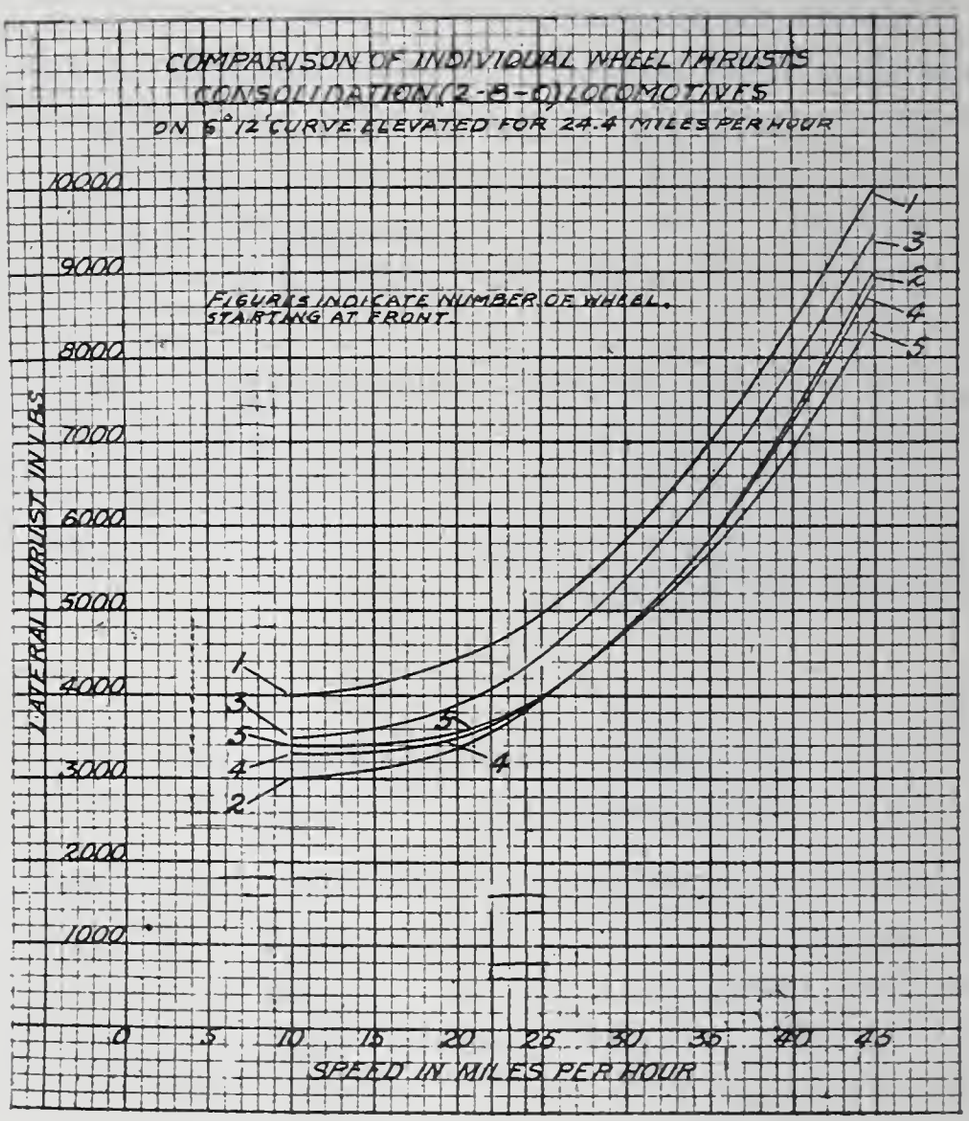

Fig. 1.

cars exerted the heaviest thrust, followed by the freight cars and tenders in the order named. I think the position of the tender in this regard is due to the fact that the work was done only 13 miles from the division terminal; that the run was mostly down grade, requiring the consumption of very little water and fuel, and that as a result, the center of gravity was high when the records were obtained.

As for the sleeping cars, the thrusts which are for individual wheels were invariably higher than those imposed by the locomotive at the head of the train, and a comparison will show that they are from two to three times as much. This cannot be attributed to low center of gravity, because if that of a standard sleeping car is taken as an average height of other cars, it was higher than that of any of the locomotives.

I attribute it to the construction of the truck with its low center plate, which may have the effect of causing a virtual lowering of the center of gravity effect. But of this I have no reliable information, other than that the thrust of the cars was higher than that of the locomotives hauling them.

In addition to the above, a few records were obtained from consolidation locomotives running backwards and of switching engines. These records emphasized very distinctly the excessive lateral thrust imposed when there is no guiding truck.

My records are not as yet comprehensive enough to base a final conclusion upon, but their general trend is sufficiently consistent to indicate a probability. They do show, however, that no predication can yet be made of the performance of any individual locomotive on a curve. The total thrust of the locomotive, as well as the individual wheel thrusts, are evidently dependent to a great extent upon the way in which the locomotive enters and passes the curve, though of this we have no information. Apparently the amount of lateral play in the axle boxes has an influence tending to increase the thrust, but the information is too meager to warrant the statement as a fact. There are indications also that the lateral thrust is greater when the engine is using steam than when it is not, but the data on this point is still too meager to serve as a basis for a final conclusion. As to the effect of the height of the center of gravity, all of the engines tested were too

nearly alike in this respect to warrant any inferences regarding it. I can only say that, when these results are compared with others obtained elsewhere, they show an increase in the lateral thrust as the center of gravity is lowered. Finally, the ratio of average increase of thrust along the lines of a parabolic curve cannot be regarded as having been proved, but the method by which the curves were drawn indicate that pressures do not tend to increase directly as the square of the speed, but by that square as modified by a constant, which is itself a function of the radius of curvature.

But to me one thing has been proved beyond peradventure, and that is that no mathematical analysis of the thrust of locomotives or cars on rails is possible, if that analysis is based on hypothetical conditions that have not been established by investigation in the field.

Mr. C. B. Bronson:* Mr. Chairman and Gentlemen—Dr. P. H. Dudley† was unable to be present this evening, so he has prepared a very interesting discussion of the important subject, which I will now read:

Mr. Barbour has stated well the credit due the early American engineers who, at the installation of the railroads, after a limited experience, had the discernment to see the correlated principles of flexibility of construction instead of rigidity between the track and the equipment which would permit of the application of larger locomotives and cars as the progress in railroad transportation required.

I have, as reporter for the International Railway Congress, Washington, D. C., 1905, spoken of the important work of Mr. John Bloomfield Jervis, upon the Mohawk & Hudson Railroad, in his installation of our distinct American practice.

To make a smooth riding engine after the injury to his track by Mr. George Stephenson's English engine "John Bull," Mr. Jervis designed for his engine a frame to receive under the front end his "guiding and swiveling four-wheel truck," and carry the one pair of drivers under the rear end of the frame. This subdivided the total load and extended the flexible wheel base by

*Assistant to Dr. P. H. Dudley.

†Consulting Engineer, Rail, Tires and Structural Steel, New York Central Lines, New York City.

more wheel contacts on the rails for the direct support of the compressible roadbed, requiring resurfacing of the track, once a year or oftener. Mr. Jervis was also Chief Engineer of the Schenectady & Saratoga Railroad, and only built three miles on stone blocks similar to the Mohawk & Hudson. Wooden stringers were laid upon crossties on the ballasted roadbed for the balance of the mileage, to provide the conjoint flexibility of construction of the roadbed, as well as for the locomotives and cars.

Mr. Jervis perceived in less than a year's operation of the Mohawk & Hudson Railroad the difference in principles required for the flexible roadbed and crossties to distribute the moving wheel load effects of the locomotives and cars, to the foundation supports of the track, from that of the designed and prepared rigid foundations for bridge abutments, piers and buildings.

Mr. Barbour, on page 2, presents a series of calculations in reference to the weights upon the ballast and unit fiber strains in different sections of the rail, and states:

"These calculations are based on the principle not generally appreciated, estabished and enunciated by Dr. P. H. Dudley, Consulting Engineer, New York Central Lines, that the wheel load spacing of the equipment controls the span of the bending rails on the flexible crossties in the ballast rather than their spacing under the rails."

He supplements the calculations mentioned by others in reference to different sections of rail; also the amount of depression from the trackman's surface, due to the loading of the locomotives used for the calculations. Then on page 3 he says:

"These results do not differ materially from those obtained by Dr. Dudley, who by means of his autographic indicator, recorded the transitory depression under the moving locomotive from the trackman's surface of the rails, crossties, ballast and subgrade, to their loaded position in the equilibrium depression with specific deflections under the wheel contacts, and by means of his autographic Stremmatograph, measured specific unit stresses in the fibers of the rails."

Mr. Barbour has not fully understood my statements in reference to the spans of the bending rail by the wheel load spacing, and applied them in his calculations. His illustrations, Figs. 1, 2 and 6, are not drawn with the specific deflections under the wheels which occur under the moving locomotives or cars in rails

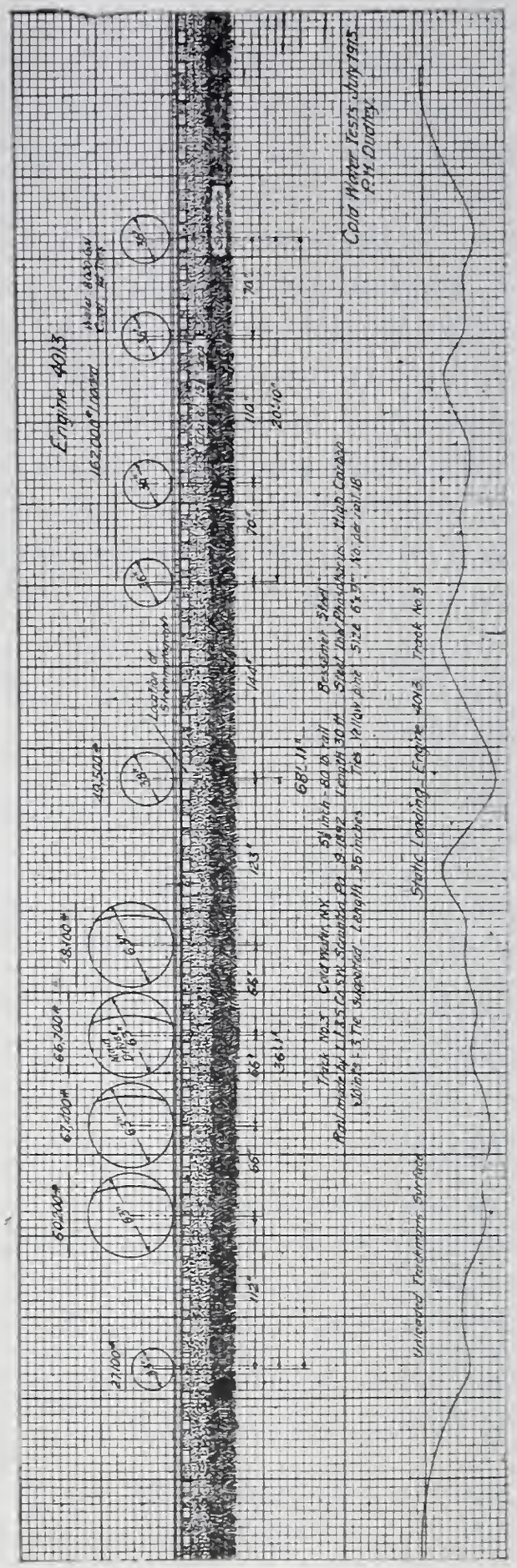
Engine 4013
Cold Water Tests July 1915
P.M. Dooley
Track No. 3
Static Loading Engine 4013
Unaccepted Performance Curves

Fig. 1.

in the track, as shown in Fig. 1 for Mikado type of locomotive, No. 4013, on a worn 5⅛ inch 80-pound rail, M. I. 26.3 in.^{4}, July, 1913.

The total load of the locomotive was 491 300 lb., subdivided as follows: 27 100 lb. on front pony axle, 60 200 lb. on front drivers, 67 400 lb. on intermediate drivers, 66 700 lb. on main drivers, 58 100 lb. on rear drivers, 49 500 lb. on trailer, and 20 250 lb. for each tender axle. The total length of the wheel base was 68 ft. 11 in., which distributed, though unequally, per wheel to 75 ft. of track on 80-pound rails, or more, for stiffer sections.

The static equilibrium depression below the trackman's surface on worn 5⅛ in. 80-pound rails, M. I. 26.3 in.^{4}, is shown in Fig. 4 for locomotive No. 4013 with the specific deflections in the rails under each wheel contact. The unit stresses in the base of the rail under the wheels are in tension, and in the wheel spacing between the wheels they are in compression. The trailer wheels with their load of only about five-sixths of the front drivers, but with the longer wheel spacing, produce the maximum depression and unit stresses of tension in the rail base.

The depression of the compressible roadbed forms from one-fifth to one-quarter or more of the total transitory depression from the trackman's surface for the 5⅛ in. worn 80-pound rail. There is a perceptible movement of the roadbed—adjustment of its pressures for the long wheel spacing—at speeds under ten miles per hour, but always with the specific deflections in the rails, crossties, ballast and roadbed under the wheel contacts.

The equilibrium depression of stiffer rails than the 5⅛ in. 80-pound is of less depth from the trackman's surface, while the unit stresses measured by my Stremmatograph will be for the same locomotive, speed and work nearly inversely proportional to the respective moments of inertia of the sections.

I furnish herewith tabulations (see Fig. 2) of Test No. 554. of the unit stresses measured under locomotive No. 4013, drawing a freight train of 91 cars, weight 3491 tons, on my 6 in. 100-pound rail, stone ballast, 7 x 9 crossties, at 28.8 m.p.h., which includes the unit stresses due not only to the wheel loads, but also to the expended tractive effort of the drivers to draw the train for the speed.

P. H. DUDLEY'S STRESSMATOGRAPH TESTS, COLDWATER, N. Y., JULY 31, 1913.

No. 554, TRACK No. 1.

Rail 6" 100-lb., 33-ft., M.I. 48.5 inches^4, S.M. 16.6 inches^3. 3-tie supported joints. Stone ballast 15" deep. Ties, yellow pine. Average age 6 years; size 6" x 9" x 8'; 18 per rail.

Engine 4013, L.S.& M.S. Mikado H7-A. Weight on drivers 252,400 lbs.; on truck 27,100 lbs.; on trailer 49,500 lbs.; on tender 162,300 lbs.; Weight of locomotive, 491,300 lbs.; number of cars, 91 - 3,491 tons. Speed 28.8 m.p.h.. Temp. in rail head 110° F.

	The extreme unit stresses in the base of one Rail, were as follows in pounds:-							Wheel Effect Bending Moments Inch Pounds.		
	(1) Per Wheel and Wheel Spacing	(0) Detail per wheel	(2) Sum per Wheel	(3) Trucks and Drivers of Engine. Tender and Cars.	(4) Engine and Tender	(5) Total for Locomotive or Cars	(6) Stress per pound of Static Load of Trucks and Drivers of Engine. Tender and Cars.	(7) Positive under Wheels	(8) Negative between Wheels	(9) Sum per Wheel
Locomotive — Engine — Truck										
Compression in front of truck	3,307	3,307		—	—	—	—	--	54,896	--
Tension under truck wheel	12,519	12,519	19,369	19,369	--	--	1.429	207,815	--	321,529
Compression between truck wheel and front driver	7,086	3,543 / 3,543								
Engine — Drivers										
Tension under front driver	13,227	13,227	18,187	--	--	--	--	219,563	117,628	301,904
Compression between front and intermediate drivers	2,834	1,417 / 1,417								
Tension under intermediate driver	17,715	17,715	21,730	--	--	--	--	294,069	47,044	360,718
Compression between intermediate and main drivers	5,196	2,598 / 2,598								
Tension under main driver	12,754	12,754	18,068	82,077	—	—	0.650	211,716	86,252	299,929
Compression between main and rear drivers	5,432	2,716 / 2,716		--	129,317	--	--		--	
Tension under rear driver	18,187	18,187	24,062	—	--	--	--	301,904	90,171	399,918
Compression between rear driver and trailer	6,377	3,189 / 3,188		--	--	--	--		--	
Trailer										
Tension under trailing wheel	20,785	20,785	27,871	—	--	--	1.126	345,031	105,858	462,659
Compression between trailer and front tender wheel	7,795	3,897 / 3,897		27,671	—	--			--	
Tender — F.										
Tension under front tender wheel	11,810	11,810	17,361	--	--	196,042	--	--	129,397	--
Compression between wheels front truck	3,307	1,654 / 1,653		33,540	--	--	0.827	196,050	--	288,196
Tension under rear wheel front truck	12,026	12,026	16,179	--	--	--	--	199,964	54,896	--
Compression between trucks	4,960	2,480 / 2,480		--	66,725	--	--		--	268,580
Tender — R.										
Tension under front wheel rear truck	9,448	9,448	13,227	—	—	--	--	156,837	--	219,969
Compression between wheels rear truck	2,558	1,279 / 1,279		33,185	--	—	0.818	--	43,127	--
Tension under rear tender wheel	14,172	14,172	19,958	--	--	--	--	235,255	--	294,061
Compression between rear tender wheel and first car wheel	4,487	4,487		--	--	--	--	—	74,485	--

Reduction of the sum of positive and negative bending moments to one pound of static load, for one rail.

Engine	Sum of positive bending moments	1,580,103.00	inch	pounds
--	-- of P.B.M. per pound of static load	9.61	--	--
--	-- of negative bending moments	566,550.00	--	--
--	-- of N.B.M. per pound of static load	3.44	--	--
Tender	-- of positive bending moments	788,106.00	--	--
--	-- of P.B.M. per pound of static load	9.71	--	--
--	-- of negative bending moments	282,300.00	--	--
--	-- of N.B.M. per pound of static load	3.48	--	--
Locomotive	-- of positive bending moments	2,368,209.00	--	--
--	-- of P.B.M. per pound of static load	9.64	--	--
--	-- of negative bending moments	848,850.00	--	--
--	-- of N.B.M. per pound of static load	3.45	--	--
--	-- of wheel effects	3,217,059.00	--	--

Fig. 2.

The measured unit stresses of tension in the base of the rail under the driving and other wheel contacts on the rails, and those of compression in the wheel spacing, do not confirm Mr. Barbour's assumptions or his drawing for the driving wheel base, or in fact, for the entire wheel base of the locomotive.

The detail of the measured unit strains to determine the unit stresses in the base of the rail under the wheel contacts and in the wheel spacing are given in Col. (1); their subdivisions of compression and tension per driver, in Col. (0), the sums per wheel in Col. (2), the amount per truck and drivers and tender in Col. (4), the total for the locomotive or cars in Col. (5), the stress per pound of static load of truck drivers of engine, tender and

cars in Col. (6), and the individual wheel effects, bending moments in inch pounds, in Cols. (7), (8) and (9). The bending moments are practically the only calculations in the tabulations. The details of the unit stresses are important in showing what occurs under each subdivided wheel load of the total load of the locomotives. The front truck wheel load of 13 550 lb., being the first to load the rail and start the transitory depression from the trackman's surface to its equilibrium depression, produced a unit stress of 12 519 lb. tension, and 3307 lb. of compression in front, and one-half of that between the truck wheel and front driver, 3543 lb. The rail and roadbed were nearly depressed for the driving wheel base, and with the constraint of the several wheels the unit stress per pound of static load was 0.650 lb. less than one-half for the truck wheel. The unit stress of 1.126 lb. per pound of static load on the trailer with the longer lever arms would now be expected; also that of the reduction to 0.82 lb. for the closer wheel spacing of the tender trucks.

Each driving wheel axle load through its wheel spacing constrains the bending rail either side, yet the individual axle load is a subdivision of the total load of the locomotive to be distributed underneath locally to the crossties, ballast and roadbed for its foundation support. This is entirely distinct from the accumulated effect of all the axle loads of the locomotive on a bridge. Cooper's bridge loading of locomotives does not apply in principle in track for the foundation support, but Jervis' principle of the subdivided distributed axle load does.

Each type of locomotive makes its own characteristic equilibrium depression with the specific deflections under its wheel contacts. The four-wheel front truck of all passenger locomotives, load, depress and constrain the rails for the driving wheels, which form part of the same wheel base.

The New York Central Railroad Company now has a large number of the Mohawk type of freight locomotives, 4-8-2-4-4 wheel base, and more have been ordered for high-speed freight service. The front four-wheel truck will depress the rail from the trackman's surface in a more favorable manner than is possible with the pony truck of the Mogul, Consolidation or Mikado types of locomotives.

I commenced my experimental investigations of the equipment on the track in 1875 with my autographic dynamometer, and in 1878 I made the track indicator which recorded the undulations from the central pair of wheels of a special six-wheel truck of 11 ft. wheel base. Mechanism was added in a short time to sum up all of the undulations per mile into feet and inches.

The eastern railways, where I was making most of my investigations, were laid principally with light steel rails, and in the tracks we found ten or twelve different sections of rails of six to twelve years' service.

The early light steel sections of 56 to 60 lb. were 3¾, 4 and 4¼ inches high. The 4½ in. series were 65-pound, 67-pound, and a 72-pound on the Boston & Albany Railroad. The deflections of the rails were large, and the joints low and worn, the crossties cut out under the rail seats, and it was impossible for the trackmen to maintain the standards desired by the officials.

The passenger locomotives did not exceed 25 000 lb. per axle load except in a few special cases where they had risen to 30 000 lb. The speed of the express trains was from 30 to 45 m.p.h. The freight locomotives of either the eight-wheel American, Mogul or Consolidation type did not have greater driving axle loads than 20 000 to 24 000 lb. The unit stresses in the limber steel rails were higher than now allowed, and the rails of all sections acquired permanent sets, which I classified in three definite forms.

To show to the trackmen where the undulations of the rails exceeded at first 5/16 in. for the 11 ft. wheel base, I made automatic mechanism to eject a colored fluid upon the rails or joints as the track indicator ran over the track. The trackmen could readily find these color spots on the rails and surface the track without reference to the diagrams. To the higher officials, the frequent color spots on the rails indicated that the light steel sections were too weak as girders for the traffic.

I designed the 5 in. 80-pound rail for the New York Central & Hudson River Railroad in 1883, and it was rolled and laid in 1884. Mr. William Buchanon designed the first 100-ton engine in 1889, the subdivided load being 40 000 lb. on the front four-wheel truck, 80 000 lb. on the two pairs of drivers, and 80 000 lb. on the eight-wheel tender.

The Empire State Express was inaugurated October 26th, 1891. My 6 in. 100-pound rail was rolled March 12th, 1892, and laid in the same month and year.

It is not necessary here to follow in detail the development of the equipment and its increased safety and efficiency of operation, as the stiffer rails as girders were installed upon the same roadbeds formerly laid with strap iron rails on stringers.

It required 50 years of railroad development to increase the driving wheel loads of 3000 and 6000 lb. to 10 000 and 12 000 lb., but only one-half of that time to increase them to 28 000 and 30 000 lb., and the freight train load of 150 to 200 tons to 3000 and 4000 tons on the stiff rails as girders in the track on the same roadbeds.

Some of the officials of the American railroad companies are surprised at the rapid deformation of the rail heads under the heavy loads on the present 33-inch cast iron car wheels. These have a coning of 1 in 20 for the narrow wheel tread of 1⅞ in., then a chamfer of 5/16 in. for the 1¾ in. width to the sand chill of the rim. The gauge side of the head of the rail is deformed and worn to nearly the contour of the cast iron wheel, while the outer portion of the chamfer pushes over the metal and builds up the outside corner square, and in a short time pushes it from the head of the rail, especially on the low rails in curves. (See Figs. 3 and 4.)

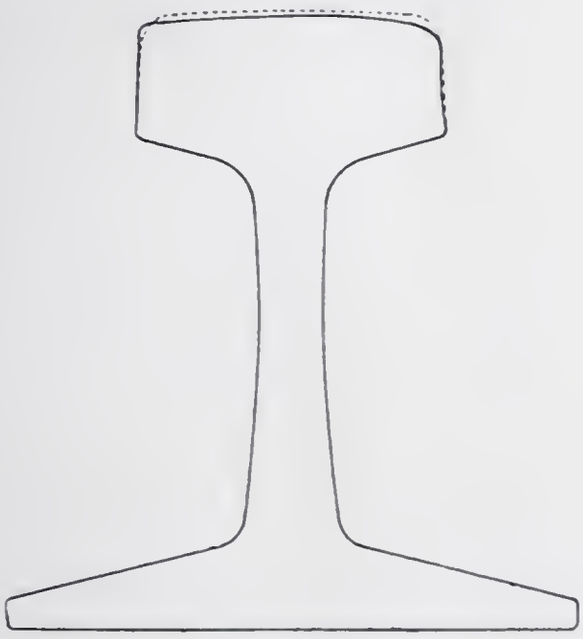

Fig. 3.

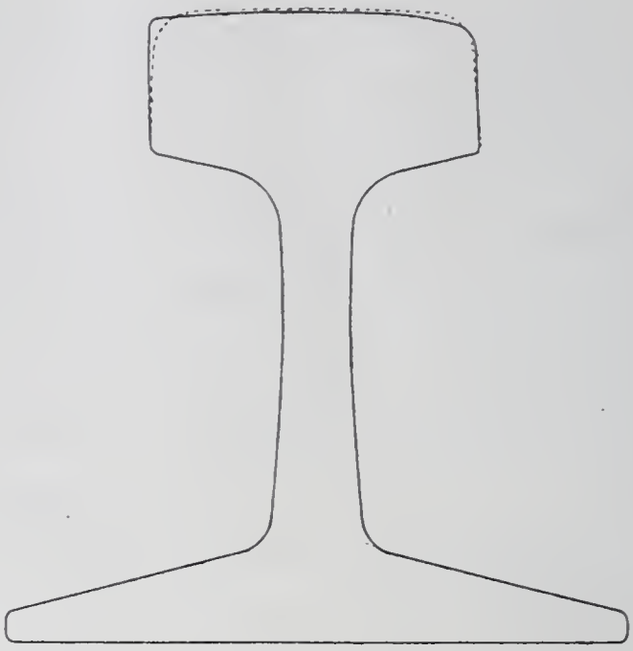

Fig. 4.

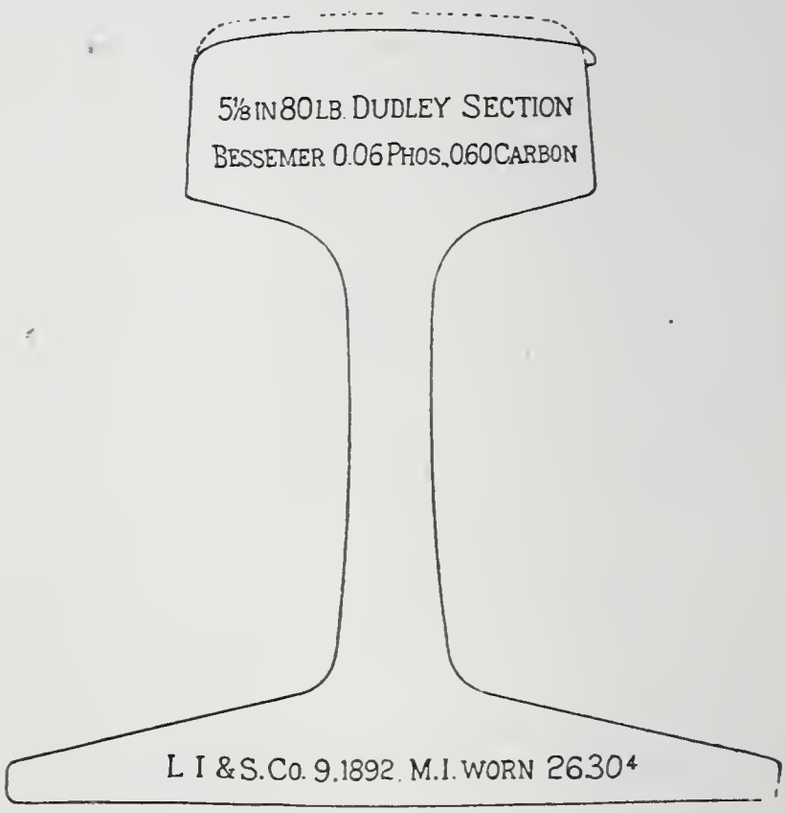
5⅛ IN 80 LB. DUDLEY SECTION
BESSEMER 0.06 PHOS. 0.60 CARBON
L I & S. Co. 9.1892. M.I. WORN 2630⁴

Fig. 5.

The wheel loads are concentrated on a narrow portion of the rail head often not more than one-quarter to one-half an inch in width, and the rail head does not wear as uniformly for its entire bearing surface as was formerly the case with the cast iron wheels of a contour of 1 in 38 extending the entire width of the rim. The uniform wear by the former 1 in 38 contour over the rail head is shown in Fig. 5 on 5⅛ in. 80-pound rails after 22 years of service, and by Fig. 6 on the 6 in. 100-pound rails after eight years of service. We have the records upon the 3 in. heads of the Boston & Albany 95-pound rail, which shows also a uniform wear over the entire rail head. The New York Central Lines have returned to the former contour of 1 in 38 for their cast iron wheel treads. The deformation of the rail heads has become so great that their life is being reduced to less service than should be the case.

Mr. Barbour states on the program for the meeting, "Increase in rail failures due to increase in fiber stresses rather than deterioration in rail manufacture." This is not at all confirmed on the New York Central Railroad. Rail breakages have been reduced in a ratio of about 1 in 20 by the substitution of basic open-hearth

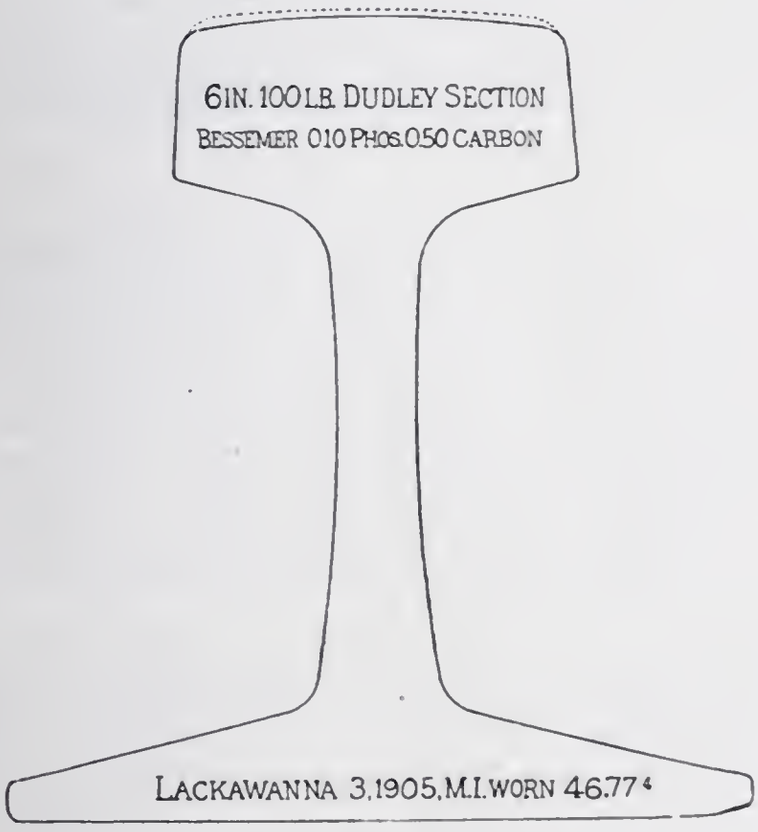

Fig. 6.

rails made under the New York Central Lines' elongation and exhausted ductility tests, in place of the former 0.10% phosphorus Bessemer rails. This is exclusive of interior transverse fissures which are due to defects in manufacture.

The progress in freight train loads and that of the speed and weight of the long distance passenger trains of eight to twelve Pullmans or coaches has been rendered possible only by years and years of experimental investigation of the results of service and the established principles utilized both for the track and locomotives.

Test No. 554 on 6 in. 100-pound rails under locomotive No. 4013, a Mikado, shows in detail what the rail as a girder in the track must do to carry and distribute the subdivided total load of the locomotive per wheel. The wheel spacing governs the span of the bending rail, rather than the crosstie spacing. The trailing wheels under the engine with about five-sixths of the axle load of the front drivers gave the largest unit stresses due to the longer wheel spacing. (See Fig. 2.)

The range of unit stresses under the drivers would change and repeat per driver according to the position of the counterweights passing over the Stremmatograph.

Col. (0) has been added to show the distribution of the detail of the unit stresses per wheel in the equilibrium depression of the track from the trackman's surface under the passing locomotive.

Mr. G. W. Snyder:* Men are said to be divisible into two classes, innovators and conservators. Mr. Barbour's paper places him in the former class. The writer has also been suspected of leanings in that direction, and it is, therefore, distasteful to him to criticize anything Mr. Barbour has said. But both classes are necessary to orderly progress; and it seems proper to intervene in the interest of order between Mr. Barbour and his future track construction.

Mr. Barbour shows by the familiar methods of computation that the large increase in rail failures, which he apparently assumes to have taken place within the last 30 years

*Principal Assistant Engineer, Pittsburgh Division, Pennsylvania Railroad.

or so and which has, no doubt, actually occurred, has been caused by a great increase in extreme fiber stresses in the lower flanges, not as is popularly supposed, by deterioration of the quality of the material. He also shows by similar methods and by various assumptions which may or may not be correct, that the girder strength of rails is not an important factor of their life. At least, one may reasonably draw such an inference from what he says. My experience fully supports this proposition.

The distinguishing characteristics of Mr. Barbour's methods of proof, as of nearly all the voluminous writings upon rail sections which have come before me, is this: that they alike assume and compute as if the subject were one to be discussed *a priori*, or as if we had no experience of rail failures; but data regarding thousands of such failures have been accumulated; and if the methods of Lord Bacon and of Descartes are to be followed as the only methods likely to lead to correct conclusions in such a matter, we must reason from those data.

Unless my recollections of a good deal of literature about rail failures are much at fault (and I have not leisure to verify them just now), excessive stresses in the extreme fibers of the flanges are not an important cause. On the Pennsylvania Railroad, for example, the data show that of the rail failures for 17 years, aggregating about 60 000 cases, some 42% occurred within the splice bars. It is also well-known that a very large proportion, approximately 90%, of the rails removed from the Pennsylvania Railroad main line passenger tracks, is removed simply because the ends become battered, making the tracks rough and uncomfortable for passengers. A believer in the inductive method would, therefore, study rail sections primarily with the object of improving the conditions at the joints. A reduction of fishing space by squat section does not look like a promising measure in that direction. Again, the reports of rail failures which have come before me for the last 30 years have not indicated a lack of girder strength in any of the sections from 60 lb. up to 130 lb. for the loads imposed, so that calculations upon any or

all of the various assumptions as to supports have not been very interesting.

There was a valuable article published in the "Railway Age Gazette" for December 20, 1907, page 752, by Mr. Geo. L. Fowler, entitled, "Areas of Contact Between Wheels and Rails." It set forth that the area of contact between a wheel and a rail head was from ¼ to ⅝ sq. in. The heaviest equipment tested was a locomotive having 19 995 lb. static load on a wheel. The conclusions are well worth quoting here:

"The average pressure imposed on the metal of the wheel and rail is within safe limits at low loads, but when a load of 20 000 lb. is reached the elastic limit of the metal is passed and a permanent set appears in the rail.

"The accumulated pressure at the center of the area of contact is excessive at comparatively small loads, and is only prevented from doing injury by the support of the surrounding metal. How far this compression extends into the body of the two pieces of metal in contact is not known but presumably it extends down to the base of the rail and into the hub of the wheel.

"Under a static load the rail yields first, owing, probably, to the fact that the metal of the surface of the head of the rail is not as well supported by the metal below as in the case of the wheel.

"The effect of difference of diameter in wheels carrying the same load is insignificant and is only appreciable when the difference is great. Hence, it is immaterial, so far as stresses on the wheel or rail are concerned, whether small or large wheels, within the limit of practice, are used.

"A hard unyielding cast-iron wheel inflicts more damage on the rail than a steel wheel and the wear of the rail will be greater with the cast-iron wheels than with the steel wheels.

"It is probable that the reason why the damage that would be expected from heavy wheel loads in service does not immediately appear, is that the rail, by bending under the passing wheel, increases the area of contact and thus relieves the surface stresses."

Since 1907 the wheel loads have increased from 20 000 to 33 000 lb. The area of contact has remained nearly the same. The static pressure of a wheel carrying 33 000 lb. on an area of ⅝ sq. in. would be 52 800 lb. per square inch. With 25% dynamic augment, this would become 66 000 lb. per square inch, and increased rail failures are no mystery.

What, then, should be the lines upon which we should work? We should endeavor to increase the area of contact between wheels and rails, either by reducing the coning of wheels or by increasing the radius of the top of the rail head, or perhaps by both. We should reduce the heterogeneity of the material in the rail and improve its structure to successfully resist the high strains imposed upon it. We should above all aim to improve the conditions at the joints, by increasing the fishing spaces if necessary, which has not yet been proved with respect to the Pennsylvania Railroad 130-pound rail or the Lehigh Valley Railroad 136-pound rail. It may also help to miter the ends of the rails. This has been tried and abandoned; but past experience merely shows that 45° mitering is not successful, while 15° or 20° has not, so far as I know, been tried, even by the street railways, which are obliged to renew such a large quantity of rails in paved streets at very great expense solely by reason of the failure of their rails as anvils at the joints. The ordinary street rail does not look like a well-designed anvil, either. Of course, the splices should be strengthened; and Mr. Barbour's method of holding them by rivets does not seem attractive for field work. If every time a rail failure occurs, the methods he mentions must be taken to replace it in the track, one may easily foresee "congestions" of traffic far more numerous than have so far occurred.

The Master Car Builders' Rules of Interchange prescribe that unless wheels have flat spots exceeding 2½ in. in length or adjoining flat spots each exceeding 2 in. in length, they will be allowed to run. These spots, of course, greatly increase the stresses in rails and when they happen to hit the rail ends at joints it must have an important effect upon the life of the rails.

I have not attempted to solve this problem. My purpose is merely to point out the direction which I believe the solution must take.

Mr. W. C. Cushing:* Mr. President and Gentlemen—First of all, I would like to ask for a correction to be made both in Mr. Barbour's paper and in Mr. Fowler's discussion. My name was used twice in connection with the Pennsylvania Railroad experiments on the West Jersey & Seashore, whereas I did not have anything to do with those experiments, and my name should be replaced by the appellation of "the mechanical engineers of the Pennsylvania Railroad."

These few remarks I am going to read were prepared at my request by Mr. Paul M. LaBach, Assistant Engineer of the Rock Island Lines at Chicago. Mr. LaBach has given a great deal of study to the methematical development of stresses in track as presented by European engineers, and having known that he had made that study, I requested him, with very brief notice, to prepare these few remarks. He, therefore, has not given me anything elaborate, but his remarks have something to add to the historical features of the paper, and, therefore, I will read them.

Mr. Paul M. LaBach:† I have been reading with much interest Mr. Barbour's contribution on the subject of stresses in rails. As the pressure of business has been too great for me to prepare a formal paper on the subject in the brief time since I have seen his mônograph, I cannot go into some of the phases of the subject which are of considerable interest, due to their complexity.

While it is perfectly true, as Dr. Dudley says, that wheel spacing apparently has greater influence than tie spacing with our present equipment and track, this does not mean that all wheel spacing and tie spacing will give this result.

If I may be pardoned for going briefly into the history of the subject of track stresses, I would like to call attention to the fact that the subject is not a new one in Europe, dating back to 1869 when Baron von Weber first began his investigations. These early investigators were French, Belgian and German engineers, largely. They invented and applied

*Chief Engineer, Maintenance of Way, Pennsylvania Lines, Pittsburgh.

†Assistant Engineer, Chicago, Rock Island & Pacific Railroad, Chicago, Ill.

many instruments to the track in attempting to gain a knowledge of the actual stresses found in practice.

For those who care to go into the subject, the files of Centralblatt der Bauverwaltung and Organ fur die Fortschritte des Eisenbahnwesens will be found of considerable interest in acquiring a knowledge of the historical development of the subject. Work has also been done in this country of considerable scientific value. Dr. Dudley has invented a Stremmatograph which measures the stresses in the rail. The Pennsylvania Railroad made a number of early tests of track. However, the European and American engineers do not seem to have gotten very closely together (excepting Dr. Dudley) and when Mr. Cushing translated Guenot's "Track Deformations" there was comparatively little in the English language on the subject.

The German investigators gave up the idea of attempting to use formulae that involved considering the track as a rigid structure. Although this was a good many years before the mathematical conception of work, as applied to structures, was formulated yet the fundamental idea they had in mind was much the same. The track was regarded as being composed of a continuous elastic rail on elastic supports equally spaced. The ties in turn were supported by an elastic ballast. The roadbed was also considered as being elastic. It is apparent that any mathematical demonstration which involves four elements and the three dimensions necessarily must be complex, but after some twenty years of advancement in knowledge Dr. Hermann Zimmermann of the Bureau of Public Works constructed a number of special instruments and after a long series of tests published a book in 1888 called Die Berechnung des Eisenbahn-Oberbaues (Calculation of the Track Superstructure). This was the high water mark on this particular subject and is always referred to by subsequent investigators.

Dr. Zimmermann from tests found a variable coefficient of ballast which he called "C." In doing this he found that the elastic curve of the tie assumed two general forms.

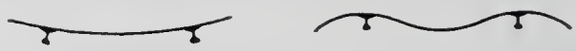

Fig. 1.

depending upon whether the tie was long or short. There are tensile stresses in the bottom of the tie under the rail and in the top of the tie, between rails, so that in getting the coefficient of ballast the depression for the full length of the tie must be known.

He demonstrates very clearly the fact that the maximum depression and the maximum bending moment in a rail are produced by a single wheel whether on or between ties, although in the latter case the moment is greater than in the former.

Dr. Zimmermann starts out by considering the longitudinal sleeper, and from that progresses to the crosstie, the latter being treated as multiple elastic supports equally spaced. His demonstrations, which involve the use of diagrams and influence lines, are hardly applicable to a brief discussion of this sort, but similar formulae may be derived by the use of the calculus* if the load is taken as a factor of the unit of length:

Y_0 = depression of rail at point of wheel load $x = o$.
p = reaction of tie against rail.
p_0 = reaction of tie against rail in units of rail length.
u = coefficient of elasticity denoting the pressure per unit of rail length necessary to depress the track (as a whole) one unit.
M = bending moment in rail at any point.
M_0 = bending moment under wheel load when only one load is applied.
x_1 = distance from X_0 to point of zero bending moment or point of inflection.
x_2 = distance of wheel load to point of zero reaction.
e = base of Naperian logs = 2.718.

The fundamental conception is that the track depression at any point is directly proportional to the load per unit of length.†

*Foppl, Vorlesungen uber technische Mechanik, Vol. III.

†This is only approximately true, but with stiff rail the depression is so slight and the angle of the elastic curve with the horizontal so small that it is thought by many not to introduce an appreciable error. However, there are two schools of computers, one using the above method and the other the concentrated load.

The fundamental equation of equilibrium is

$$E1 \frac{d^4y}{dx^4} = uy$$

The derivatives represent or are proportional to

1st—slope of the elastic curve
2nd—bending moment of the beam or rail
3rd—the shear
4th—the intensity of the load. Also it is proportional to the original function.

From the foregoing the following are derived:

$$M_0 = p\sqrt[4]{\frac{E1}{64u}}$$

$$x_1 = \frac{\pi}{4}\sqrt[4]{\frac{4E1}{u}}$$

$$x_2 = 3x_1$$

$$y_0 = -\frac{p}{\sqrt[4]{64E1u_3}}$$

$$p_0 = p\sqrt[4]{\frac{u}{64E1}} = -uy_0$$

All then that is needed to work out a particular case are p and u, which must be found from experiment.

When there is another load, in addition to the first, close enough to come within the distance $3x_1$, from the first load, the positive bending moment under that wheel will be decreased. This is exactly what occurs under a locomotive. When the wheels are closely spaced the bending moment is decreased, when widely spaced the opposite is true, but the maximum bending moment is made by a single load.

Somewhat similar conditions led Dr. Zimmermann to propose a maximum bending moment formula based on the spacing and a single wheel load. He does not say that loads are not frequently less than this, but that it is not exceeded in track under his observation. With short engines and high speeds, wheels sometimes act singly, hence the maximum.

Dr. Zimmermann's formula is derived as follows:

G = concentrated load.
P = pressure of rail on tie.
C = coefficient of ballast.
a = center to center of ties.
B = force capable of making rail deflect one unit.
D = force needed to sink tie one unit.

$$\gamma = \frac{B}{D}$$

E = coefficient elasticity of rail.
I = moment of inertia of rail section.

$$B = \frac{6\,E\,I}{a^3}$$

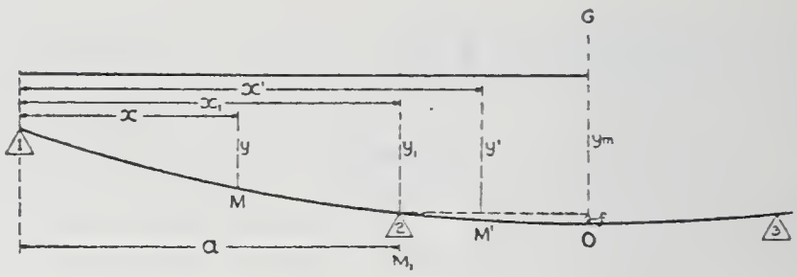

Fig. 2.

$M_0 = O.$
$M = P_0 x$
$M' = P_0 x' + P_1 (x-a).$

$$EI\frac{d^2y}{dx^2} = -M$$

$$EI\frac{dy}{dx} = -\int M dx = -\frac{1}{2}\ P_0 x^2 + C$$

$$EI\frac{dy'}{dx'} = -\int M' dx' = -\frac{1}{2}\ P_0 x^2 - \frac{1}{2}\ P_1 (x'-a)^2 + C'$$

If $x = x' = a$

$$-\frac{1}{2} P_0 a + C = -\frac{1}{2} P_0 a + C'$$

$$\therefore C = C'.$$

Let $x = \frac{3a}{2}$ then $EI\frac{dy'}{dx'} = 0$

The tangent at this point will be horizontal, then

$$-\frac{1}{2}\ P_0 \times \frac{9a^2}{4} - \frac{1}{2}\ P_1 \times \frac{a^2}{4} + C' = 0$$

$$c' = \frac{a^2}{8}(9P_0 + P_1)$$

Thence: $EI\frac{dy}{dx} = \frac{a^2}{8}(9P_0+P_1) - \frac{1}{2}P_0x^2$

$$EI\frac{dy'}{dx'} = \frac{a^2}{8}(9P_0+P_1) - \frac{1}{2}P_0x^2 - \frac{1}{2}P_1(x-a)^2$$

Integrating once

$$EI\int_0^a \frac{dy}{dx} = EI(y_1-y_0) = \left[(9P_0+P_1)\frac{a^2x}{8} - P_0\frac{x^3}{6}\right]_0^a$$

$$y_1-y_0 = \frac{a^3}{24EI}(23P_0+P_1)$$

$\frac{6EI}{a^3} = B$ = capacity of rail to resist bending.

$$y_1-y_0 = \frac{23P_0+3P_1}{4B}$$

$$EI\int_a^{\frac{3a}{2}} \frac{dy'}{dx'} = EI(y_m - y_1) = EIf$$

$$= \left[\frac{a^2}{8}(9P_0+P_1)x'\tfrac{1}{6} - (P_0x_1^3) - \tfrac{1}{6}P_1(x'-a)^3\right]_a^{\frac{3a}{2}}$$

$$(ym - y_1) = f = \frac{a^3}{24EI}(4P_0+P_1) = \frac{4P_0+P_1}{4B}$$

But, $2(P_0 + P_1) = G$

$y_0 = \frac{P_0}{D}$ and $y_1 = \frac{P_1}{D}$.

$$y_1-y_0 = \frac{P_1-P_0}{D} = \frac{23P_0-3P_1}{4B}$$

$$P_1 = \frac{G}{2} - P_0$$

$$P_0 = \frac{4B-3D}{8(2B+5D)} \times G$$

$$\gamma = \frac{B}{D}$$

$$P_0 = \frac{(4\gamma-3)}{8(2\gamma+5)} \times G$$

$$P_1 = \frac{4\gamma+23}{8(2\gamma+5)} \times G$$

As $M_0 = 0$ Equations 1 & 2 become as follows for $x = a$ and

$$x' = \frac{3a}{2}$$

$$M_1 = P_0 a = \frac{4\gamma-3}{8(2\gamma+5)} Ga$$

$$M_{max} = \frac{8\gamma+7}{8(2\gamma+5)} Ga.$$

Dr. Zimmerman found that the coefficient y was between 3 and 8, but it may have greater variations than this. (Metric system.)

The accuracy of the formula depends upon the question as to the relative position of the points of inflection and the ties. Mathematicians have worked out formulae for as many as ten supports for one load.

Attention may also be called to the work of M. Laurent Schlussel,* of Paris, on the subject of lateral stresses. The interesting part about this is that he derives from tests a similar formula to Zimmermann's for vertical loads. If a resultant is taken from the two it will show that the stresses in a rail are greater on the outside portion of the base of rail than on the inside. This is also found with the Stremmatograph.

The difficulty in handling all these formulae is to get the one that applies directly and then make the necessary calculation for speed, but it does not look to be impossible.

Whether a rail is properly proportioned between height and width can be obtained by means similar to that mentioned above. The stability of a rail is not different from any other structure, but a rail may be stable from a static point of view and still have fiber stresses in the outside portion of the base which may be greater than allowed by good practice. The knowledge we have of this particular subject is too small for one to make very many predictions, but there are indications that the attempt to get rigid rails by excess height leaves something to be desired.

*M. Laurent Schlussel, Role, repartition et calcul des Actions horizontales dans les voies des chemins de fer Bulletin Societe des Ingenieurs Civils de France, September, 1909.

Mr. Barbour's statement "in the face of such augmented stresses, what becomes of the contention that increase in rail failures is due to deterioration in rail manufacture," has a proof of another sort. The physical quality of rail has been improved in the past five years, and in those places where wheel loads have only been slightly increased there is a considerable falling off of the number of rail failures. Evidently the reverse should be true.

The study of stresses in rail brings out an important point independent of the magnitude. That is, the importance of loading the series of wheels in such a manner that heavy loads should not have wide spacing. An ideal loading would have the forward truck wheel the lightest, and then gradually increase to the middle driver and then shade off to the trailer, which should not have over two-thirds of the static load of the main driver. A great many locomotives, as now built, produce greater stresses under the trailer than anywhere else.

Mr. S. A. Taylor:* I do not have anything to say in the way of discussion, but would like to ask a question. It is evident not only from the paper read, but also from the discussion, that the ballast is a very important factor. I would like to ask Mr. Cushing, or some other of the railroad men here, the comparative value of granulated slag and the old rock ballast?

Mr. Cushing: I do not know just what you mean by granulated slag. If you mean the form of slag now turned out, which looks like brown sugar, we do not regard that as ballast suitable for main track at all, except temporarily, or during construction work. It would not compare with the rock ballast. Personally, I think it is objectionable to have the track too flexible. The present-day traffic loads are too heavy.

I might make one further remark, and that is that there is a joint committee of the American Society of Civil Engineers and the American Railway Engineering Association, under the guidance of Professor Talbot, of the University of Illinois, which is studying the stresses in railroad track from actual measurements in experimental work. Many thousands of measurements have

*Consulting and Civil Mining Engineer, Pittsburgh.

already been made on a specially prepared track of the Illinois Central, and I believe on the Delaware, Lackawanna & Western and the Norfolk & Western, and it is hoped from the great care that has been given to these experiments there will be something definite issued at no far distant date. As one of the speakers has already said, this is not a problem which can be calculated by mathematics. Mathematics will form the guide for helping along the investigation, but the coefficients must be produced by actual experimental work.

MR. THOMPSON: I would like to ask a question. There has been a great deal of reference to lateral stresses to the track this evening and, while vertical stresses have been mentioned, very little has been said about them. I would like to ask if there is any data available or tests that have been run to show the vertical stresses on the track, that is, vertical stress as it would vary with the use of the track, size and type of the locomotive, dead weight on the axle, etc.

MR. BARBOUR: I believe Mr. Dudley has made tests of that character.

MR. H. H. RANKIN:† I would like to ask Mr. Barbour what is his method of taking care of the contraction and expansion due to atmospheric temperature changes with a variation of say 100° F. in the case of riveted joints as against the ordinary fish plates and track bolt joints.

MR. BARBOUR: The rivet goes through the same hole as the bolt. If you used a solid rivet and attempted to drive it up, it would upset the shank, but by using the hollow rivet we can expand it. The whole thing is about the same as a plumber expanding the end of a lead pipe when making a wiped joint.

AUTHOR'S CLOSURE: I note with interest Mr. Lindenthal's advocacy of a 200-pound rail; but have not myself investigated any section heavier than 150 lb. He does not give the properties

†Civil and Mining Engineer, Pittsburgh.

laterally of his U-rail, and I have not found time to calculate them myself, so am unable to compare it with the T-sections by means of my formula. As to the cross section of my 20-inch crosstie, I had in mind a thickness of 5/16 in. for the bottom flanges and web and of ⅜ in. for the flanges supporting the rail. Reference to Figures 10 and 11 reveals wearing strips interposed between the flanges of rail and crosstie as recommended by Mr. Lindenthal, and that the two rivets of a fastening must be sheared before the latter can fail laterally. The 20-inch crossties, 30 in. centers, have 10-inch tamping spaces between them, and if 8 in. are sufficient, 16-inch crossties, 24 in. centers, could be used with the same bearing pressure per sq. in. upon the ballast.

While it is true, as stated by Mr. Vaughan, that the chamfering of the flanges of the rail raises its center of gravity, the increase is insignificant in comparison with the reduction in the vertical, lateral and polar distances from the critical fibers of the flange to the center of gravity of the rail resulting therefrom; nor is the decrease in flange bearing such a detriment when the rail rests upon the tieplates of wooden crossties or the wearing plates of steel ones. It seems to me that a flanger could be devised to clear such top flanges as are proposed for my splicebars; and a cursory examination of my paper will show that I contemplate cold riveting for my tubular rivets, and of my figures that expansion and contraction are provided for in the customary manner.

Mr. Fowler is the recognized authority on lateral thrusts, and his admirable discussion will be carefully studied and digested by all who are interested in a subject which he himself characterizes as one of "grave uncertainty." His statement that the lateral thrust increases as the track deteriorates seems to justify my comparisons for extreme cases, which culminate in a superiority of 40% for my combination of 136-pound squat rails on 20-inch crossties, 30 in. centers, when the elastic limit of rail steel is approached and permanent distortion is imminent.

On account of Dr. Dudley's strictures, I have introduced a paragraph in the body of my paper more clearly defining the basis of my calculations of the vertical bending moments produced in the 54 and 60 in. spans, respectively, by the wheel contacts of the Wilson and Cooper locomotive loadings; and have added to Fig

ure 6 a diagram illustrating the specific deflections under the locomotive wheels as recorded by Dr. Dudley. I purposely evaded this phase of the problem in my original paper in the hope that he would elucidate it himself in his own inimitable manner; for, while credit may go to Mr. John B. Jervis for instituting the principle of a flexible superstructure upon an elastic roadbed, to Dr. P. H. Dudley the tribute of the whole railroad world is due for his patient, persistent and painstaking researches and experiments, covering a period of over 40 years, and for the just and sound conclusions he has deduced therefrom, which alone provide any tangible basis for a solution of this most elusive and intricate problem.

Mr. Snyder brings out the fact that a large proportion of rail failures occur within the splicebars, though most railroads do not classify battered ends as rail failures. He seems to have missed the point of my argument, that by means of my rivet it is possible to provide the splicebar with a generous top flange, thereby obtaining either a stronger splicebar for a given fishing distance or a less fishing distance for a given strength of splicebar. The small contact between wheel and railhead opens up another subject of "grave uncertainty," for there is no doubt but that the cold rolling or peening of railheads resulting therefrom is a source of danger, and whether this may best be bettered by changing the coning of the wheel or the contour of the railhead or by tilting the rail is sufficient matter in itself for another evening's discussion.

I have not yet had time to digest Mr. LaBach's data and formulae, but am particularly impressed by the last paragraph of his discussion on the loading and spacing of locomotive wheels best calculated to produce long and gradual vertical sweeps.

HISTORY OF THE DEVELOPMENT OF RAIL ON THE BALTIMORE & OHIO RAILROAD

By Earl Stimson*

Nearly two centuries before the introduction of the locomotive, wooden tram rails were in use at the collieries in the northern part of England; for we find that in 1630 Master Beaumont substituted for the common road a form of railroad from his coal pits, near Newcastle, England, to the river side, to convey caldrons of coal in bulky carts with fine rollers fitting on rails of timber laid "exactly straight and parallel."

It was found that with this arrangement the renewal of broken or worn-out rail injured the sleepers and made it difficult to keep the track in condition. This was improved upon about 1649, by placing another rail of wood upon that already laid, so that what was known as the "single way" became the "double way."

The following abstract from a description of these old tramways shows that the value of the use of iron in track was known:

> "When the draft was harder than usual in consequence of a steep ascent or a sharp curve in the line, friction was diminished by nailing to the wooden rails thin plates of malleable iron."

About this same time we find that a ledge was placed on the side of the rail to prevent wagons from going out of their tracks.

During the hundred years following the first use of wooden rails a few unsuccessful attempts were made to introduce stone rails, but it was found that what was thus gained in durability was lost in smoothness.

With the increased weight of the wagons the wear and tear upon the wooden rails became so great that, in 1737, at Whitehaven, England, cast iron plates were placed upon the face of the wooden rails. This was the first use of continuous cast iron plates.

*Engineer, Maintenance of Way, Baltimore & Ohio Railroad, Baltimore, Md.

Beginning with 1750 and the introduction of cast iron wheels, the following years witnessed important advances. Cast iron wheels began to be used, first on the forward axles only, under the belief that the brake would hold only on wooden wheels. Soon, however, this was disproved and all wheels were made of cast iron.

The next development took place in 1767. When the price of iron was very low it occurred to the proprietors of the Colebrookdale Iron Works, as a means of keeping their furnaces at work, to cast iron in such a form as to admit of its use on wooden railways in the works. This, it was then thought, would save the cost of repairs to the railway, and if a sudden rise should take place in the price of iron the rails could be taken up and sold as pig. These rails were about 5 ft. long, 4 in. wide and 1¼ in. thick, each rail having three holes through which to fasten it to the wood block.

About 1776 an improved Colebrookdale rail was produced. This rail had a flange on the inside, rising 3 in. above the path of the wagon wheel. These rails were laid upon cross sleepers or with longitudinal sills. These were still further improved in 1793 by the addition of a bracket to support the flange and by longitudinal ribs under the rail to give added strength between the supports, which were at this time stone blocks under each end. These rails were 3 ft. long and were secured to the stone blocks by spikes driven into hardwood plugs which had been set in the stone.

Fig. 1 shows a sketch of the Colebrookdale rail.

These ties and rails were unsatisfactory, on account of the fact that stone and dirt accumulated on the surface and caused much friction. This objection was overcome by the introduction, in 1789, of the Jessop edge rail. This was a fish-belly rail from

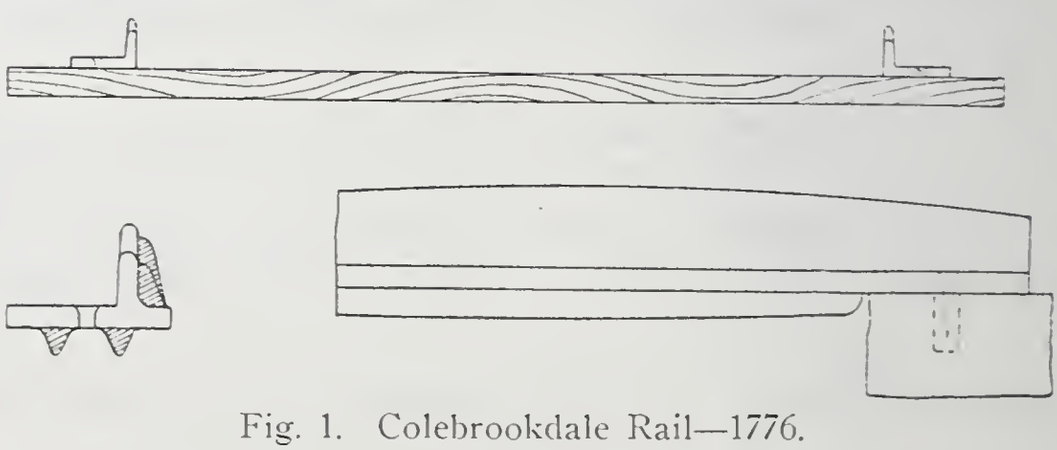

Fig. 1. Colebrookdale Rail—1776.

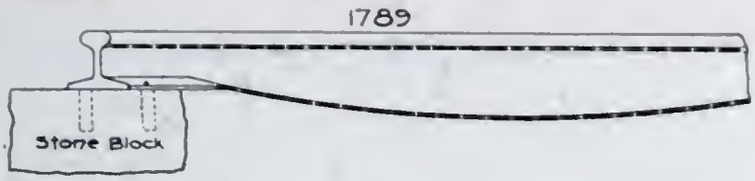

Fig. 2. Jessop Fish Belly Rail.

3 ft. to 4 ft. long. The rail was made with a head 2 in. or 2½ in. wide and a web about ½ in. to ¾ in. thick. The base was flat for a short distance at each end, through which square holes were cast for the pins or nails to pass for fastening to the sleepers. A sketch of this rail is shown in Fig. 2.

The wheels used with this Jessop rail had a cylindrical rim with a projection on one side called the "flanch," about 1 in. deep.

Chairs for holding the rails were first used in 1792. These chairs were of cast iron, 4 in. by 7 in. on the base and ¾ in. thick. They rested on stone or wood blocks, or sleepers, about one foot square, and were fastened by oak plugs. The ends of the rails fitted in the recesses in the chairs, which held them in place. Several forms of rail chair have been used from time to time, and may still be seen on English railways. Some types of rail chairs are shown in Figs. 3, 4 and 5.

Malleable iron rails were first used in the Walbottle Colliery, near Newcastle, England. These rails were 1 in. or 2 in. square, 2 ft. long and connected by lap joints 2 in. or 3 in. long, with one pin at each joint. These rails were not successful, as they cut the wheels.

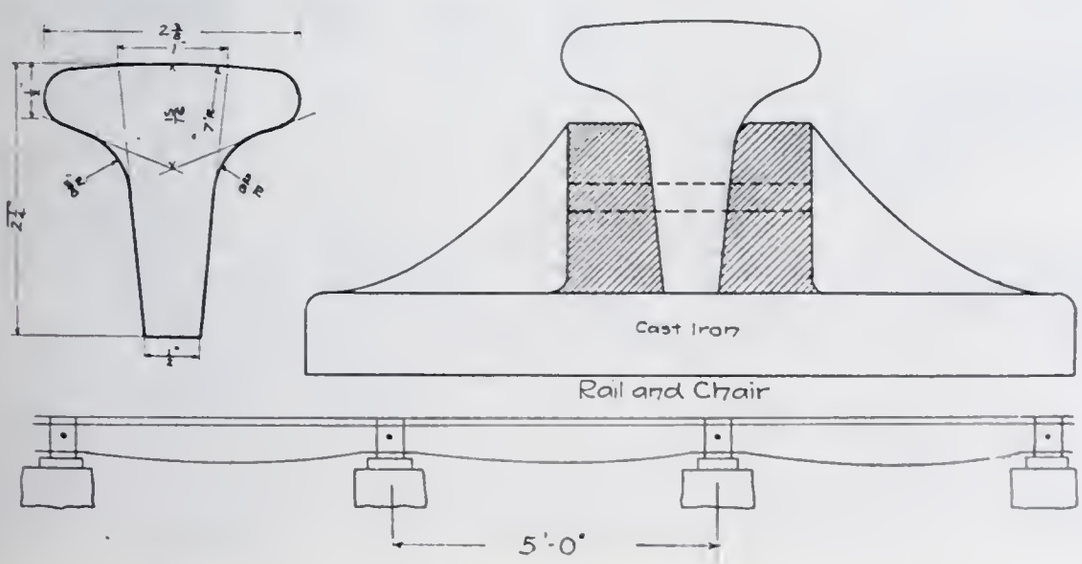

Fig. 3. Birkenshaw Rail and Chair—1820-5.

Fig. 4. Birkenshaw Rail and Chair—1820-5.

Fig. 5. Fish Belly Rail, Showing Rail Chairs Used in England About 1792.

Up to this time nearly all development had been in England, but in 1807 a tramway was built on Beacon Hill, Boston, by Silas Whitney; a woodenway was being talked of in Philadelphia, and in 1809 Thomas Leiper completed a tramway in Delaware County, Pennsylvania. The site of the old Leiper tramway is the present location of the Crum Creek Branch of the Baltimore & Ohio Railroad.

During the years that the first tramways were being introduced into this country, many attempts were being made in England to produce a cheap and durable rail by the combination of wrought and cast iron, but nothing came of this until a method of rolling iron into any required shape was introduced in 1820. During this year the development of the wrought iron rail began with the granting of a patent, by the English Government, to John Birkenshaw, of the Bedlington Iron Works, for several forms of rolled edge rails. These rails were rolled in 15 to 18 ft. lengths, and they soon began to rapidly replace the cast iron rails, which had been very unsatisfactory on account of the short lengths of 3 ft. to 4 ft., they giving much trouble on account of breaking. Mr. Birkenshaw proposed to weld the ends of the rails together, but there is no record of this having been done. The Birkenshaw rail was not unlike the upper half of the modern rail. The head was, however, more nearly oval, with the long diameter horizontal and the lower part formed to rest on chairs. This rail is very clearly shown in Figs. 3 and 4.

Interest was being shown in railway development in the United States. A line of wooden rails resting on granite sleepers, commenced in 1826, at the granite quarries in Quincy, Massachusetts, extended three miles to the Neponset River. Another road of similar character, except that the rails rested on wooden instead of granite sleepers, was constructed at Pottsville, Pennsylvania, in 1827. The Mauch Chunk Railroad, in Carbon County, Pennsylvania, was built with wooden sleepers and strapped with flat iron bars. In 1823 the New York Legislature chartered the Delaware & Hudson Canal Company to construct a canal and railroad from the corn fields of Pennsylvania to the Hudson River at Rondout in New York. The canal was completed in 1828, but the railroad was not completed until 1829. The railroad was 16 miles long and was built to carry coal.

Considerable agitation in Baltimore during 1827 resulted in the passage of an act of the Legislature of Maryland incorporating a joint stock company, called the Baltimore & Ohio Railroad Company, with power to construct a railroad from the city of Baltimore to the Ohio River. The capital stock of the company was fixed at $5 000 000.

The corner stone of the Baltimore & Ohio Railroad was laid on July 4, 1828, by the venerable Charles Carrol, of Carrolton, and on July 28th of the same year the grading was started. The first section of track was laid during the winter of 1828-9, extending from Mt. Clare westward about three miles. The first rails were laid at the east end of Mt. Clare premises near the intersection of Poppleton Street, which was not then laid out. These rails were probably brought over from England, for records show that the price of rails in the United States at this time was $90.00 per ton, and the Baltimore & Ohio Railroad contracted for 500 tons of strap rail in England at $58.00 a ton, "inclusive of all expenses."

"The World's Railway," by Major J. G. Pangborn, contains the following description of the first Baltimore & Ohio track:

"After the ground is brought to a level, square holes are dug 4 ft. apart, 20 in. wide, 2 ft. long and 2 ft. deep. These holes are filled level full of broken stone securely rammed down. After the foundation is thus made a trench 6 in. deep is dug connecting each hole with the one opposite. These trenches are also filled with stone, and upon them cedar sleepers, or crosspieces, are placed with great care and accuracy, a spirit level being used to adjust them properly. In each of these crosspieces, immediately above the stone foundation, notches are cut, and into these wooden rails or stringers are carefully leveled and secured by wedges. These stringers are of yellow pine and from 20 ft. to 24 ft. long, 6 in. square and beveled on the top to clear the flanges of the wheels, which are on the outside, not the inside as on some lines. On the top of the stringers the iron rails are carefully nailed with wrought iron nails 4 in. long.

"This method of construction was used for the first seven and one-quarter miles, to Vinegar Hill, at a cost of $4002.00 per mile. West of Vinegar Hill long granite slabs were substituted for the cedar crosspieces and yellow pine stringers for a distance of six and three-quarter miles at a cost of $5116.00 per mile, to Ellicotts Mills, to which point the track was completed May, 1831."

Fig. 6. First Track Constructed of Longitudinal Stringers and Strap Rail—Mt. Clare. 1828.

Upon this piece of track various experiments were tried, among them sails, to a limited extent, but the favorite method of conveyance was a flat car drawn by horse.

The St. Louis World's Fair exhibit of the Baltimore & Ohio Railroad contained several exceptionally interesting paintings and sketches of this first track, reproductions of which are given in Figs. 6, 7, 8, 9 and 10.

Although the early descriptions of this track state that the flanges were on the outside, it is probable that not much of the track had been built before they were changed, for we find that in 1830 they were changed to the inside, so that, in 1831, when the Baltimore & Ohio Railroad first advertised for locomotives, the specifications read: "The flanges are to run on the inside of the rails, * * * the flanges are to be 4 ft. 7½ in. apart from inside to inside."

These early specifications also indicate that the gauge at that time was either the present standard gauge of 4 ft. 8½ in., or very

Fig. 7. First Track Laid from Mt. Clare to Vinegar Hill.
Wooden Stringers and Strap Rail—1828-1829.

Fig. 8. First Track Laid from Vinegar Hill West.
Stone Stringers and Strap Rail—1829-1834.

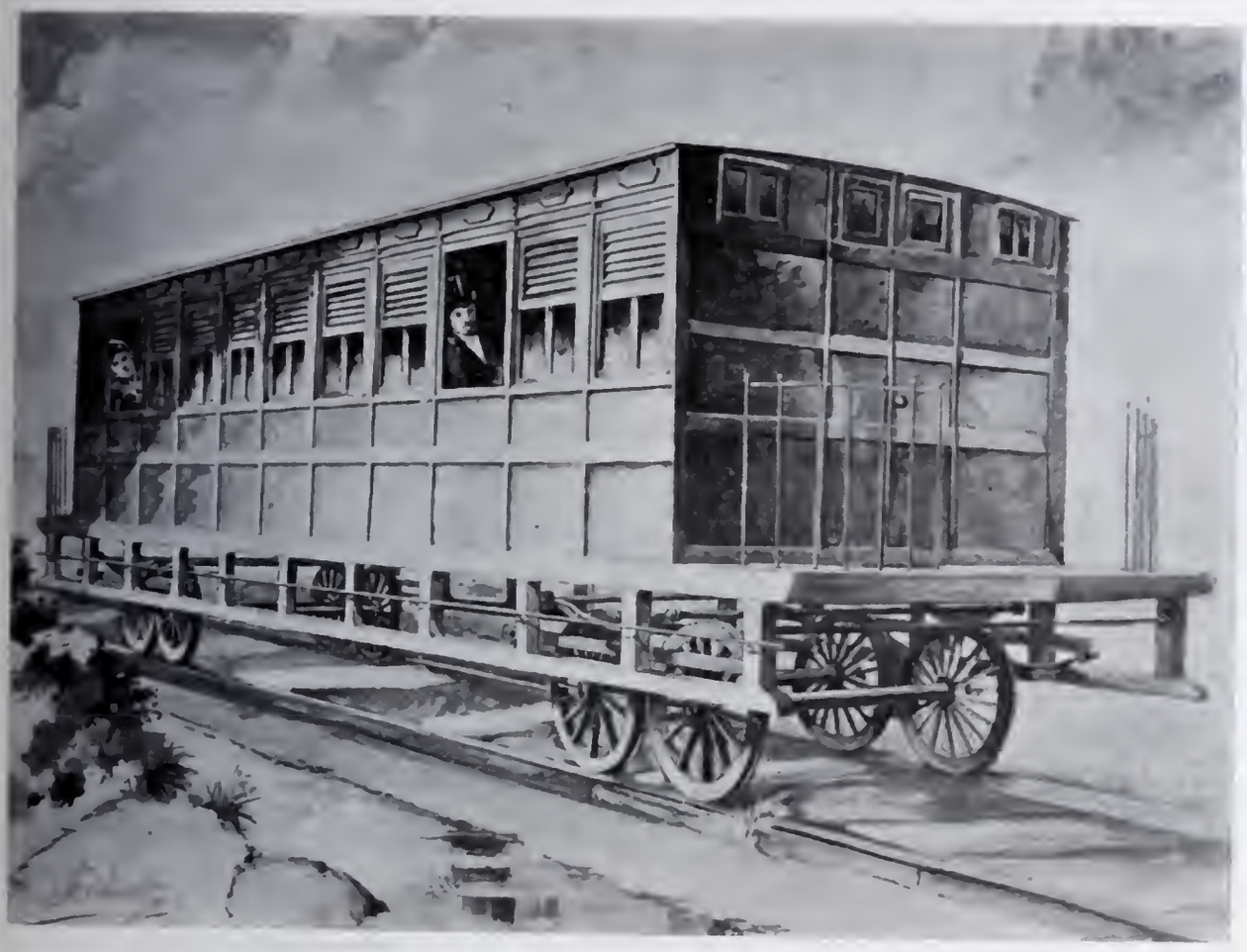

Fig. 9. The Ross Winans Coach Used on First Track.

Fig. 10. Costell Locomotive Used on First Track.

nearly so. This gauge had been made standard in England several years before, although there were several other gauges in vogue at that time also. The early wooden and cast iron tramways in England were generally 5 ft. over all, including the width of the two rails. As Jessup's rails were at one time 1¾ in. wide, the width of the two rails deducted from the 5 ft. leaves 4 ft. 8½ in. as the standard gauge.

The early strap rails were not successful, for, notwithstanding the fact that they were "securely nailed down," it was found that traffic would loosen them, with the final result of their turning up as the wheels passed over them and forming what was called "snake heads," which sometimes rose up and penetrated the car floor.

Construction on the Baltimore & Ohio Railroad continued so that in 1831 track was completed on Pratt Street, Baltimore. In December of the same year the road was completed to Frederick, and in 1832 to Point of Rocks, a distance of 73 miles. Several methods of construction were used on this road. Stone was used for track to the head of the Patapsco (Fig. 8), and from there to Point of Rocks, stone not being available, timber was used, as shown in Fig. 7, so that 40 miles of the line were on granite sills 8 in. thick, 15 in. wide and various lengths, laid in trenches filled with broken stones; and 33 miles on various forms of construction: wood and iron rails on stone blocks, wood and iron rails supported by broken stone, wood and iron rails supported by longitudinal ground sills instead of broken stone, log rail formed of trunks of trees worked to a surface on one side to receive the iron and supported by wooden sleepers, and wrought iron rails such as used on English railroads. Fig. 11 affords a particularly interesting and accurate set of sketches of the early sections of track. It was soon realized, notwithstanding the fact that the movement of trains was much more smooth and steady over the part laid with granite sills than where the iron was upon wooden stringers, that it was more expensive to hold the rails to the granite than to the wood.

The invention of the "T" rail as we now know it is interesting. The Directors of the Camden & Amboy Railroad in September, 1830, instructed Robert L. Stevens, President and Chief

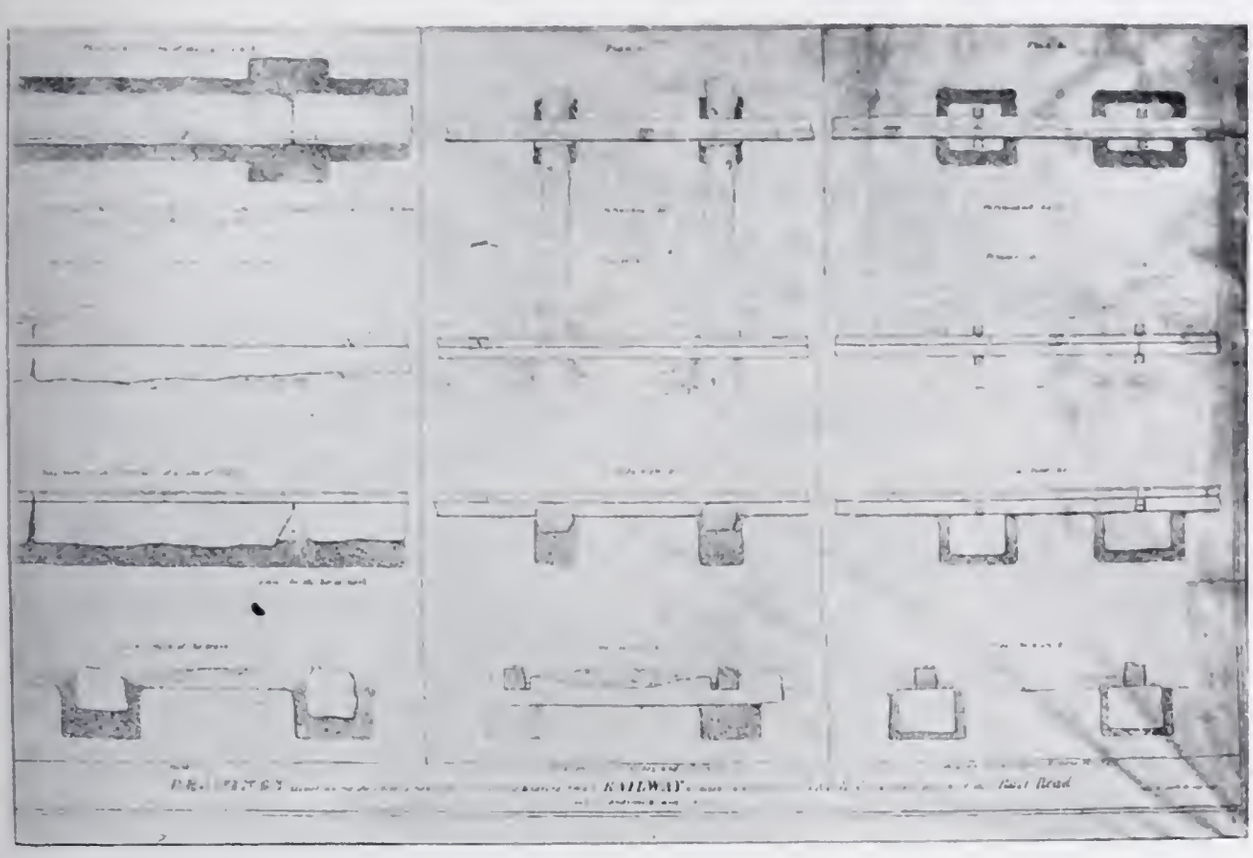

Fig. 11. Early Sections of Track.

Engineer of that company, to visit England to report upon railroad matters there and to purchase all iron rails to be used instead of the wooden rails with strap iron. A short time after Mr. Stevens sailed, and during his voyage, he designed the first rail with a base, by whittling thin wood into shapes until he obtained one to suit. This was the first design of a "T" rail with a base, thus doing away with the chairs, and was first called the "H" rail. He also designed the "hook-headed" spike, which is substantially the railroad spike of today; the "iron-tongue," which has been developed into the fish plate and angle bar; and rivets, which have been replaced by the bolt and nut, to complete the joint. The following letter was addressed to the English ironmasters a short time after Mr. Stevens arrived in Liverpool:

"LIVERPOOL, November 26, 1830.

"GENTLEMEN:

"At what rate will you contract to deliver at Liverpool, say from 500 to 600 tons of railway of the best quality iron rolled to the above pattern in 12 or 16 foot lengths to lap as shown in the drawing, with one hole at each end and the projections on the lower flange at every 2 ft., cash on delivery?

"How soon could you make the first delivery, and at what rate per month until the whole is completed? Should the terms suit and the work give satisfaction a more extended order is likely to follow, as this is but about one-sixth part of the quantity required. Please to address your answer (as soon as convenient) to the care of Francis B. Ogden, counsel of the United States at Liverpool.

"I am, your obedient servant,

"ROBERT L. STEPHENS,

"President and Engineer of the Camden & Amboy Railroad & Transportation Co."

The base of the rail which he first proposed was to be wider where it was to be attached to supports than in intervening spaces. This was afterwards modified so that the base was made one width throughout. After considerable difficulty in getting the rails rolled, the first shipment, consisting of 550 rails, 18 ft. long, 36 lb. to the yard, arrived in Philadelphia on May 16, 1831. The weight of the next shipment, several months afterwards, was increased to 42 lb. per yard, the rail being 3½ in. high. The section and dimensions of Stevens' "T" rail are shown in Fig. 12.

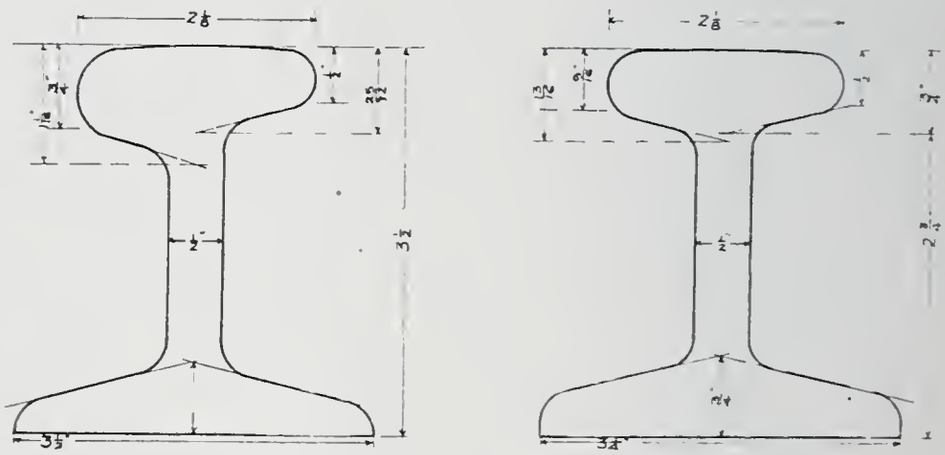

Fig. 12. Stevens "T" Rail—1831.

The first so-called "H" rail used on the Baltimore & Ohio Railroad was on the Washington Branch, which was opened from Relay to Blandensburg on July 20, 1834, and to Washington on August 25, 1834. Tanner says of this rail:

"An 'H' rail weighing 40 lb. per yard was used. The ends of the rail were cut at an angle of 60°. The ends of the rails were kept in their proper horizontal and vertical position by means of a cast iron chair B (see Fig. 13), which had two downward projections CC grasping the inside

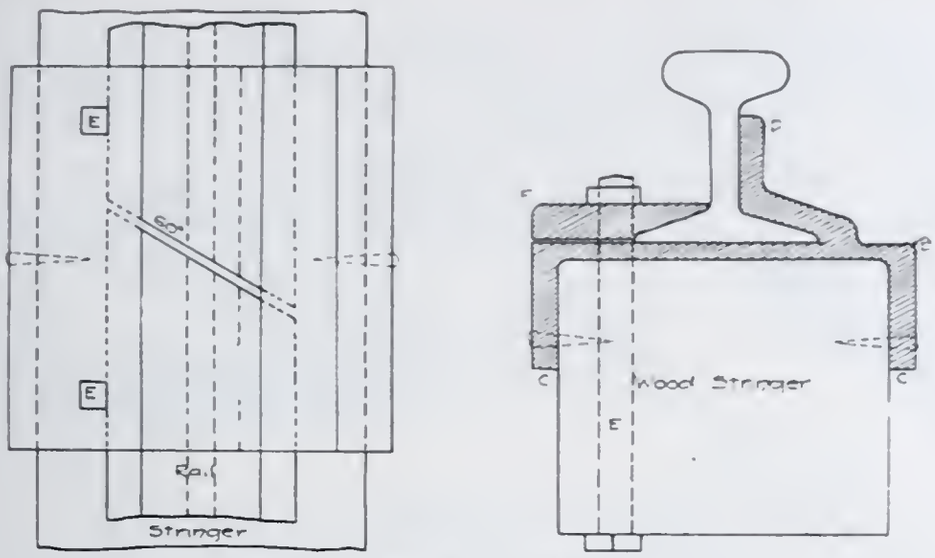

Fig. 13. 40 Lb. "H" Rail.
First Rail Used on Washington Branch—1834.

of the wooden stringers, to which they were fastened by spikes driven horizontally through a hole in each projection or flange of the chair. The two ends of adjoining rails rest upon this chair, and they are secured on the inside of the track from starting inwards, and from rising up, by a lip D, cast upon the chair, which lip extends upwards and laps over the lower web of the rail on the side. Whilst any starting of the rail in the contrary direction, as well as a rising of the rail upon the outer side, is prevented by the square shank of screw bolts EE passing up through square holes in the chair and in contact with the lower web of the rail, and by a plate of cast iron F placed upon the top of the lower web of the two rails and fastened down by a nut in the screw bolt. The intermediate parts of the rail at every three or four feet are secured in line upon the string piece by hook-headed spikes in the usual manner of fastening down the 'H' rail. Under the middle of each rail there is introduced a small wrought iron plate, through holes in which the two opposite spikes at that place are driven. This plate was intended to strengthen these spikes, and at the middle of each rail a notch was cut in one side of the lower web, and in this notch one of the spikes that passed down through the plate was driven. This is the expedient adopted to prevent the endwise movement of the rails in track."

Figs. 14 and 15 show a section of track laid with this rail.

In 1841 a "Z" bar rail, shown in Fig. 16, was designed by B. H. Latrobe, of Baltimore, for the Baltimore & Ohio Railroad, but it is doubtful if this rail was extensively used. The Latrobe rail was a compound rail of wood and iron 5 in. high and weighed 45 lb. per yard. The wood-stringer portion of the rail was made to fit closely against the stem and under the head of the "Z" iron,

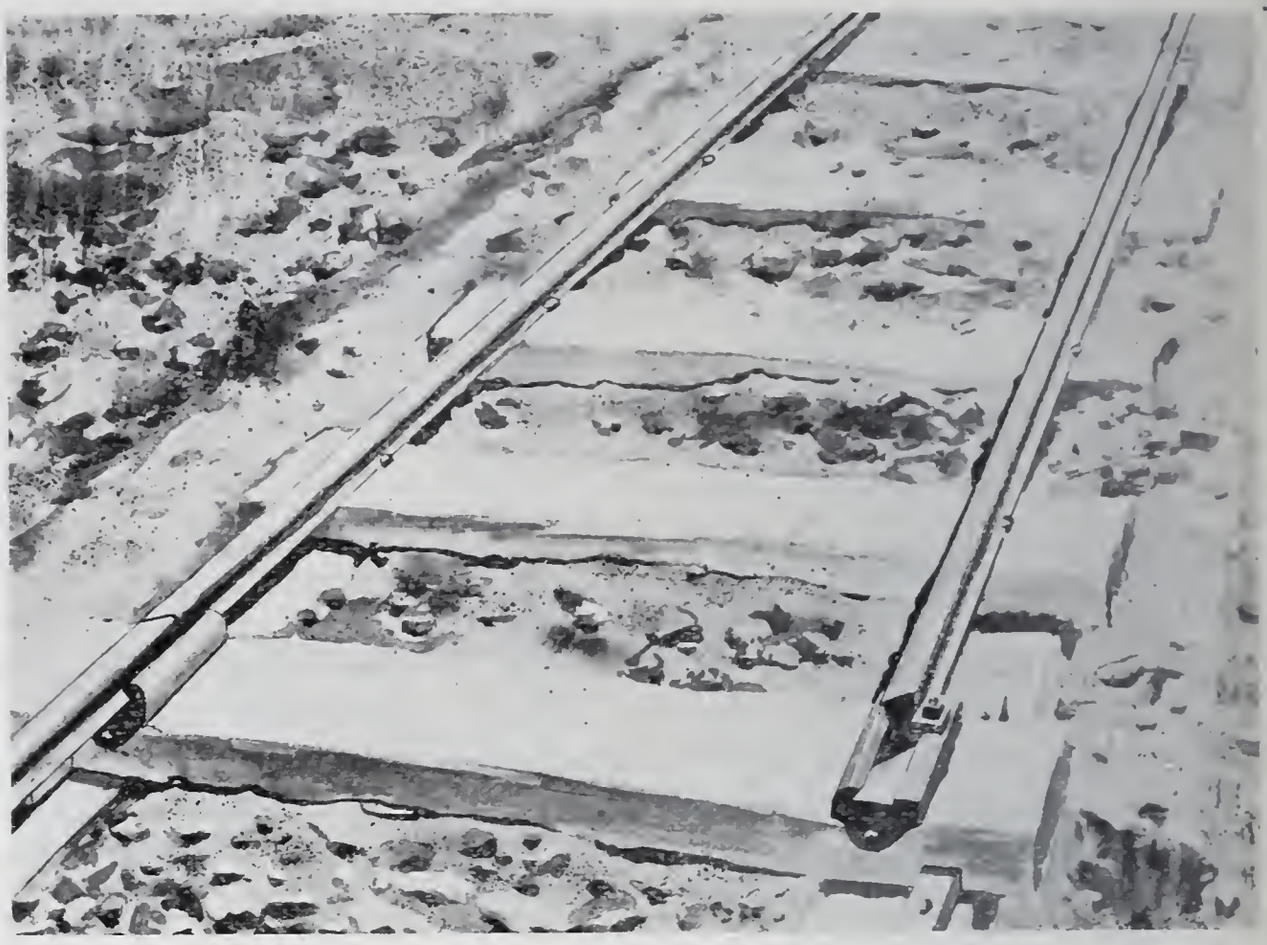

Fig. 14. 40 Lb. "H" Rail.
First Used on Washington Branch—1834.

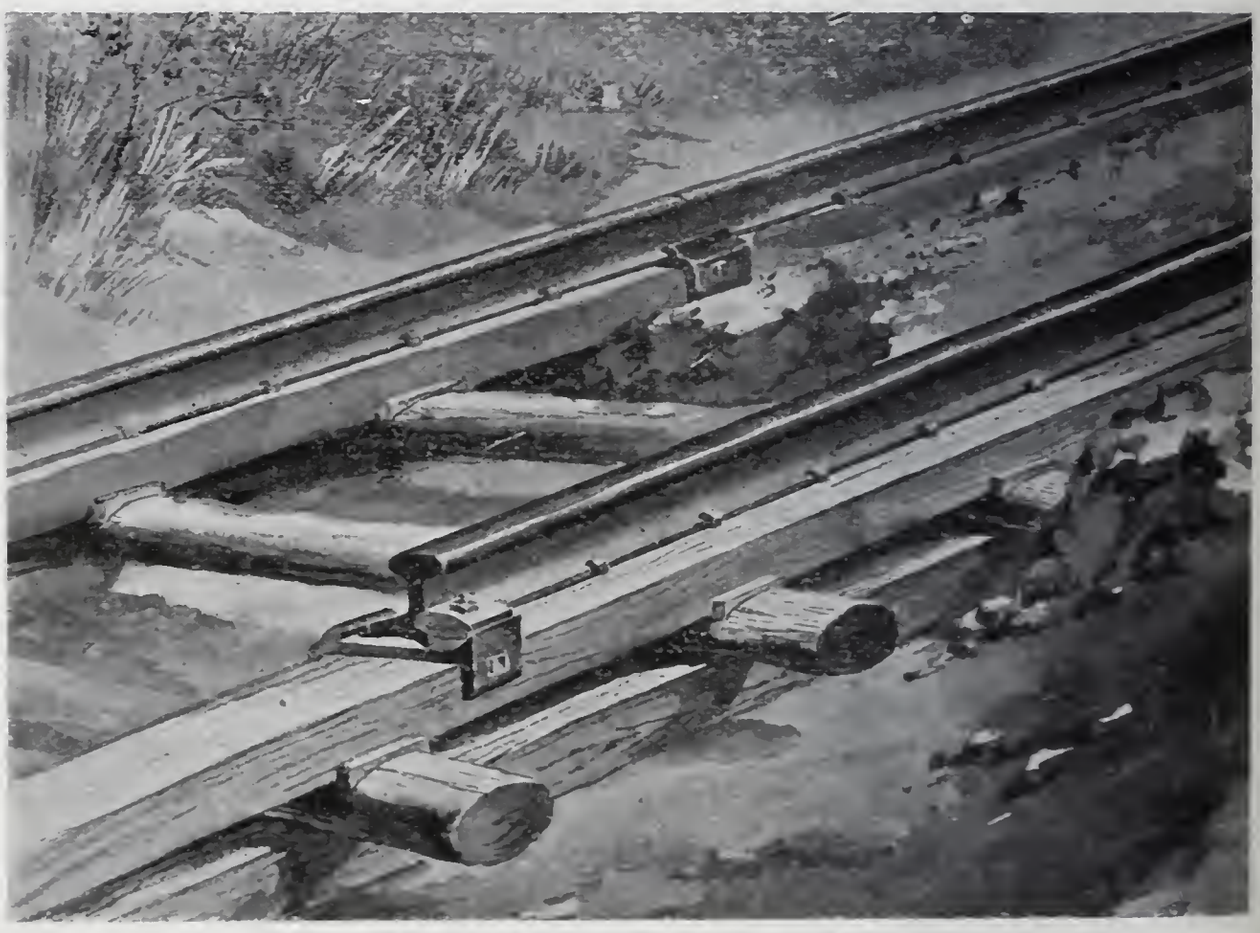

Fig. 15. 40 Lb. "H" Rail.
Early Method of Track Construction—About 1840.

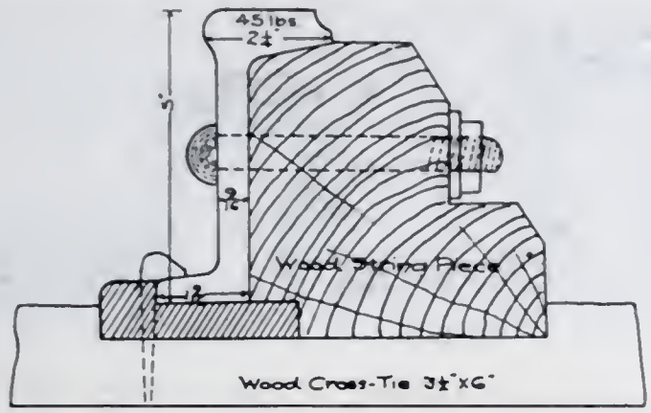

Fig. 16. Latrobe "Z"-Shaped Rail—1841.

to which it was joined by ⅝ in. bolts with screw nuts. The iron and wood parts were laid to "break joints," so that no splice bars except the joint plates were needed.

Records show that during this same year (1841) the Baltimore & Ohio Railroad purchased English rails at $36.50 a ton. It is probable that this was a comparatively small shipment of "H" rails.

It is interesting to note that at this time 18-foot lengths of rail, weighing 50 lb. to the yard, were believed to be the limit of advantageous handling by track forces.

The first rail rolled in America was turned out in 1844 by the Mt. Savage Rolling Mill, Allegheny County, Maryland. This rail was of the "U" type and weighed 40 lb. per yard. In honor of the event the Franklin Institute of Philadelphia awarded a medal to the proprietors, and the following extract from the proceedings of the institute is interesting in this connection:

"A bar of railroad iron of the 'U' form, rolled by the Mt. Savage Iron Works, near Frostburg, Maryland, and forwarded by Colonel Young, Manager. This bar is 18½ ft. long and weighs 40 lb. per lineal yard. It is part of a lot of several hundred recently rolled there for a branch of the Baltimore & Ohio Railroad leading to the works. This bar is among the first early rails yet rolled in the United States, and it demonstrates beyond the reach of cavil that edge rails can be well manufactured in America. This bar is well proportioned, sound and well finished. It is the first ever exhibited here of American make, and we hail it with pleasure as the beginning of a new manufacture and award it a silver medal.

"John Weigand,

"Chairman of Committee."

Fig. 17. "U" Rail—1844. Saddle Rail—1840-1850.

It is worthy of mention that but recently this "U" type rail section has been suggested by several eminent engineers as the ideal type.

It is probable that some of this rail was also laid on what was then called the "main stem" of the Baltimore & Ohio Railroad.

Fig. 17 shows two sections of rail removed from track in 1904. The rail on the left is of the "U" section rolled at Mt. Savage. The rail on the right is the "saddle rail" section, and was doubtless rolled previous to 1850. The dimensions of these sections are given in Figs. 18 and 19.

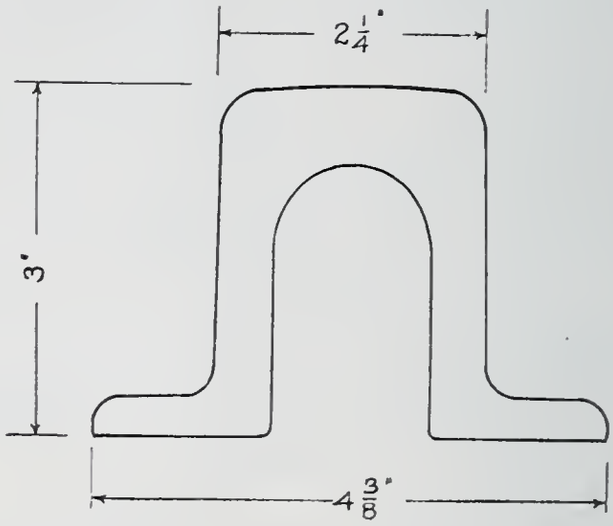

Fig. 18. 40 Lb. "U" Rail—1844.

This type of rail was often called "bridge rail," from the fact that it was among the first rail laid on ties instead of longitudinal stringers, thus giving the appearance of a continuous bridge. Fig. 20 shows track laid with "U" rail in 1844 near Cumberland, Md.

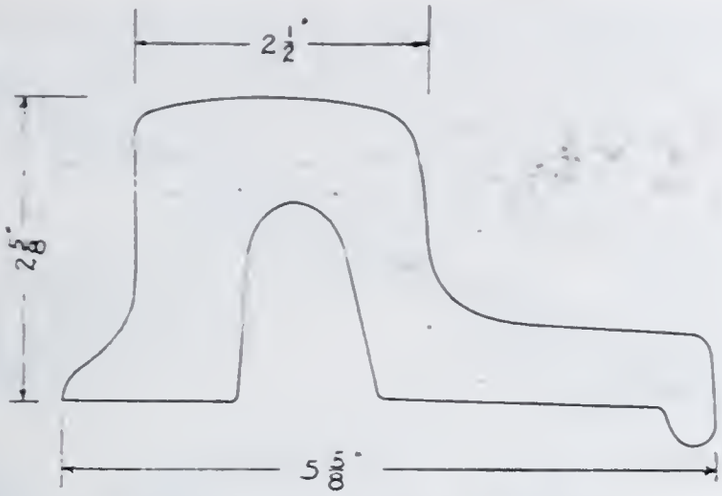

Fig. 19. Saddle Rail—1840-1850.

In 1846 it was found absolutely necessary to rebuild the 80 miles of road from Baltimore to Harpers Ferry, on account of the fact that the construction as originally put down was too light for the now heavier traffic. Although the records are not clear as to the exact locations at which rail was laid, we do find that during this same year, 1846, contracts were entered into with the New York & Maryland Company and the Covington Manufacturing Company to supply edge rail to lay 30 miles of track; that in 1850 a contract was entered into with the Thompson & Foreman Company, of London, for 22 000 tons of rail at $40.00 per ton, delivered at Locust Point; that in 1851 what was known as the "iron bonds," for $566 666.67, were issued in payment for 20 000 tons of rail at the rate of $28.30 per ton; and that during 1854 50 miles of "string track" were changed to crosstie track, leaving but 21½ miles to be changed.

The stone blocks in the track on Pratt Street had also proved unsatisfactory and were replaced in 1848 by oak sleepers. During this same year an ingeniously devised all-iron compound rail was laid on the Baltimore & Ohio (see Fig. 21), but, like the many other compound rails that were produced and tried about this time, it was found the parts could not be kept together, as the bolts became loose, allowing the rail to spread in track.

Construction had gone on very rapidly on the Baltimore & Ohio, so that in 1852 the line was completed to Wheeling. Fifty-eight-pound rail was standard at this time, and was laid on wrought iron chairs spiked to crossties 2 ft. apart and embedded in 2 ft. of broken stone and gravel ballast. In 1858, 8881 tons of

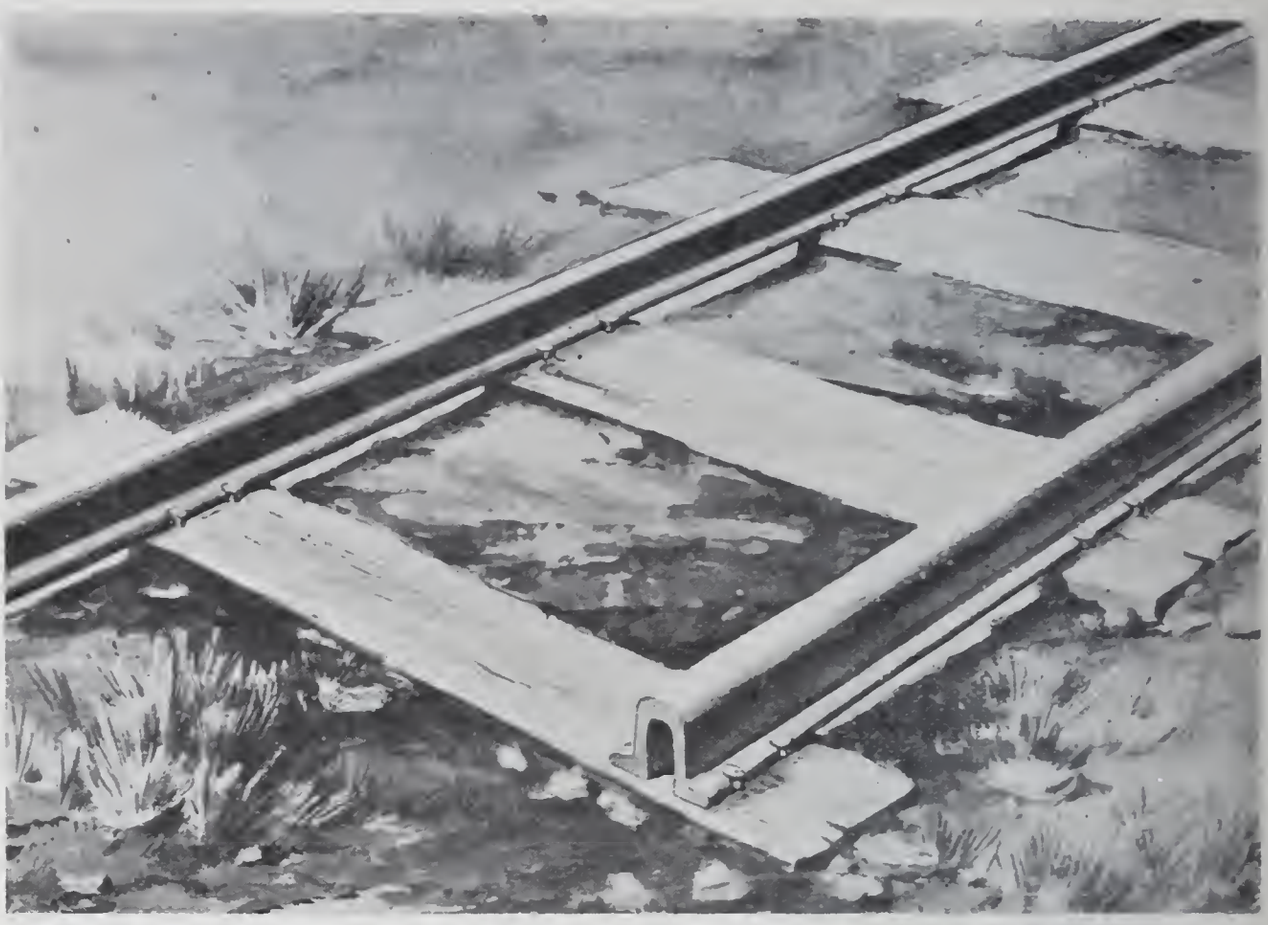

Fig. 20. Track Laid With "U" Rail Near Cumberland, Md.—1844.

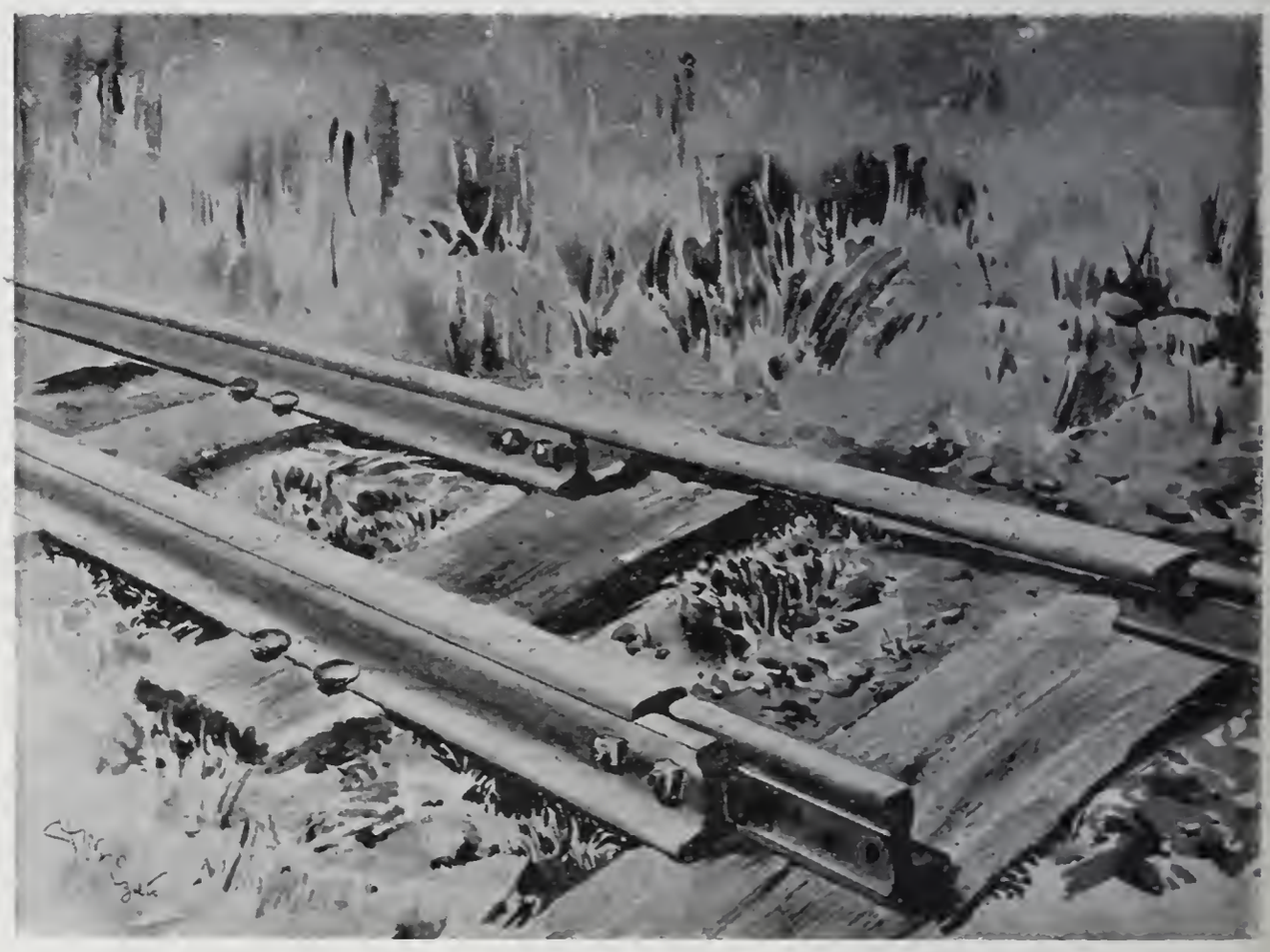

Fig. 21. Compound Rail—1848.

rail were used to lay 92 miles of "main stem" with new rail, this being the largest amount laid in any one year up to this time.

During the Civil War the price of iron was so high that little rail was rolled. Several attempts were made to lay rail on the Washington Branch, but each time that rail was on the ground ready for laying it was necessary to use it to replace track that had been torn up between Harpers Ferry and Martinsburg, and it was not until 1863 that rail replacement began on the Washington Branch. During this year a shipment of rails was received from England at a net cost of $125.00 per ton gold. The 40-pound rail was replaced by 60-pound "T" rail on white oak ties between Laurel and Washington (see Fig. 22); the string track on Frederick Branch was replaced by crossties and "T" rail, and the old granite sills and plate rail on Howard Street were replaced with 68-pound rail on heavy oak stringers.

The period of the greatest importance in the history of rail was between 1847 and 1857, as during this time the Bessemer process of making steel was perfected, and in the year 1857 the first Bessemer rail was rolled at the Elbro Vale Iron Works,

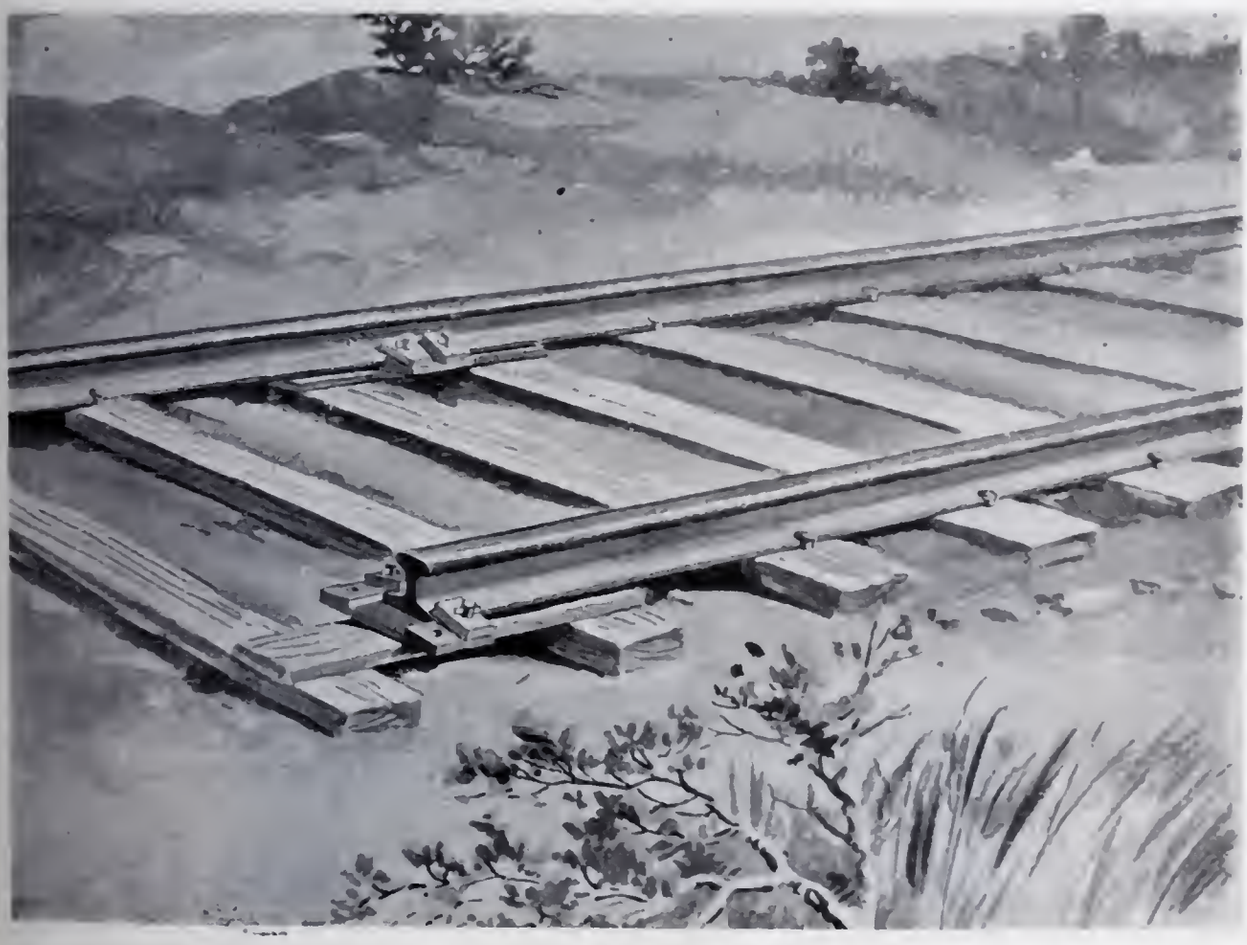

Fig. 22. 60 Lb. "T' 'Rail Laid on the Washington Branch in 1863.

England. This was a double-headed rail that was laid on the Midland Railroad, and was in use for 16 years. History tells us that during this time 1 250 000 trains and a like number of detached engines and tenders passed over it.

The first Bessemer steel produced in this country was in 1864, at a small experimental works established at Wyandotte, Michigan. The first Bessemer steel rail ever rolled in America was made at the North Chicago Rolling Mill on May 24, 1865, from ingots cast at the Wyandotte Works. Steel rails were laid as a test on the Baltimore & Ohio soon after they were introduced, and in 1870, 86 tons of steel rail were laid out of a total of 1921 tons of rail rolled that year. At least part of this rail rolled in 1870, and also that rolled in 1869, were of American manufacture, for rails removed from track in 1912 near Baltimore, and shown in Figs. 23 and 24, are plainly marked "A. I. Company." Figs. 25 and 26 show the dimensions of the sections. It seems very probable that this rail was rolled at the Abbot Iron Company rolling mills at Canton, Maryland, as it is known that this mill was furnishing rail to the Baltimore & Ohio Railroad at that time.

As early as 1856 both English and American manufactured rail was declared of such inferior quality that Master of Road Bollman recommended establishing a rolling mill. He found that iron which had been in track 18 years was in much better condition than some that had been used but two years. It was not until October, 1869, that work was actually begun on a rolling mill at Cumberland, Maryland. This mill was completed in June, 1871, at

Fig. 23. Iron Rail Rolled by Abbott Iron Co.—1869.

Fig. 24. Iron Rail Rolled by Abbot Iron Co.—1870.

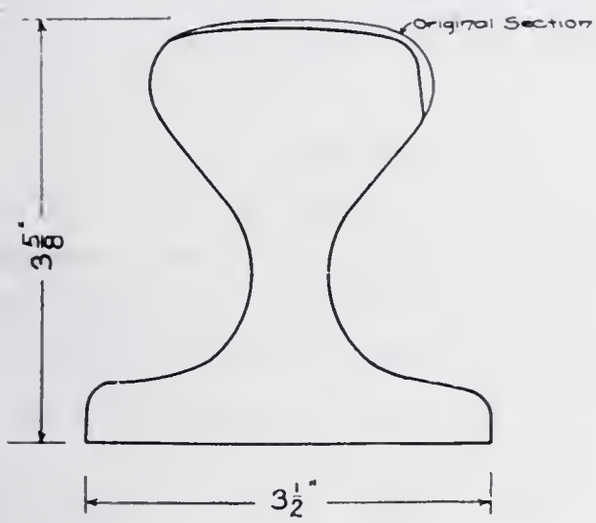

Fig. 25. Section of A. I. Co. Rail—1869.

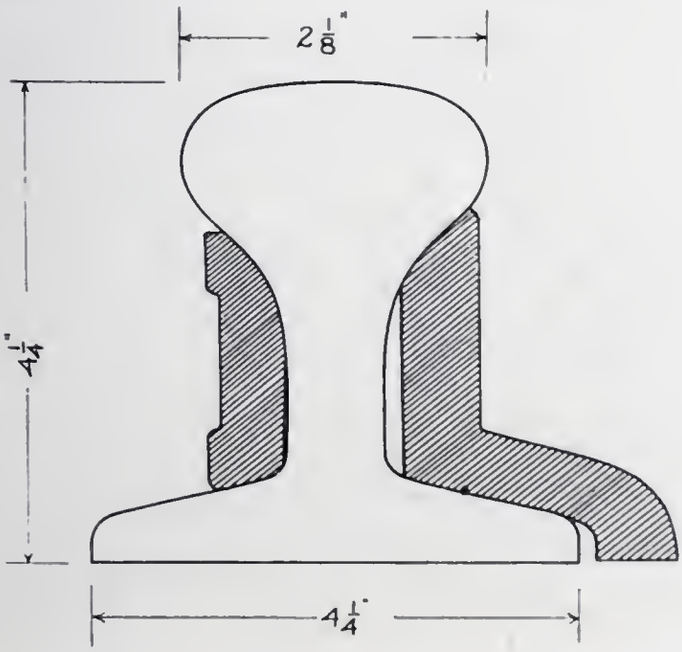

Fig. 26. 72 Lb. Rail Showing Sections of Two Types of Splice Bars.

Fig. 27. Rail Rolled at Cumberland—1875.

a cost of $547 968. The mill was in continuous operation by the Baltimore & Ohio Railroad Company until 1890, when it was leased to the Cambria Iron Company. The output for the fiscal year 1874 was 32 726 tons of rail and 2972 tons of bar iron. There were 853 men employed during that year, at a total wage of $430 858. The Cumberland Rolling Mill while operated by the company rolled only iron rail. This rail was of pear-shape section, as shown in Figs. 27 and 28. This mill did not supply all the rail used on the Baltimore & Ohio during the years that it was in operation, as records show that in 1872 there were 9118 tons of steel rail laid and contracts entered into for 16 000 tons additional. There are several different sections still in use that were rolled and laid during the period from 1871 to 1890, some of which are shown in Figs. 29 to 34. Many of these early rails

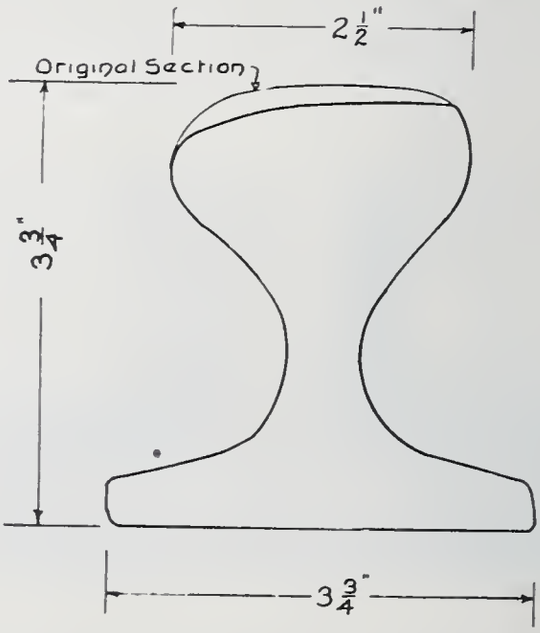

Fig. 28. Section of B. & O. R. R. Co. Rail—1875.

Fig. 29. Scranton Steel Co. Rail—1886.

were of the pear-shape section, on account of the fact that the designing of the rail sections was largely left to the rolling mill men, and they naturally designed such sections as could be most easily rolled.

The rail on Pratt and Howard Streets was again changed in 1871, this time from "Z" rail to tram rail.

The large renewals of rail that were necessary in nearly all railroads after the close of the Civil War in 1865 had resulted in many sections of rail being used by the different railroads, until in 1880 it was estimated that the mills carried rolls for 300 different sections, four of the mills carrying 29 different weights between 56 and 85 lb. There were 24 different sections of 60-

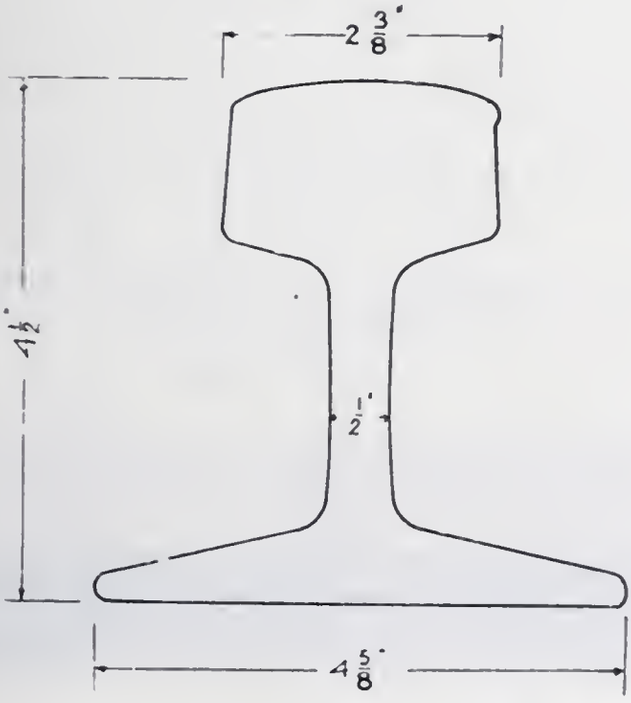

Fig. 30. Section Scranton Steel Co. Rail—1886.

pound rail alone. The Baltimore & Ohio was no exception in regard to the number of sections used previous to 1893, for we find that a great variety of sections from 56 to 85 lb. per yard were used. The principal sections used during that period are shown in Figs. 35 to 56, inclusive.

Fig. 31. A. F. Creusot Rail.

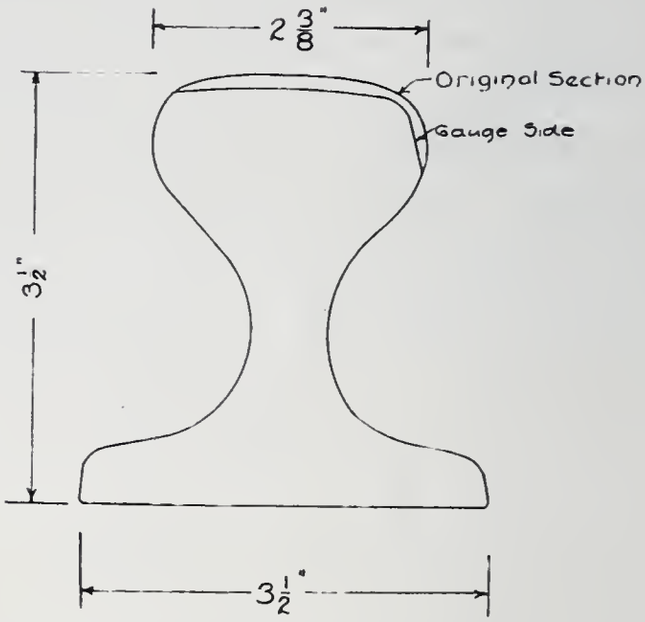

Fig. 32. Section of John Brown Rail Rolled in 1866 at Sheffield Atlas Works, England.

Fig. 33. John Brown Rail—1872.

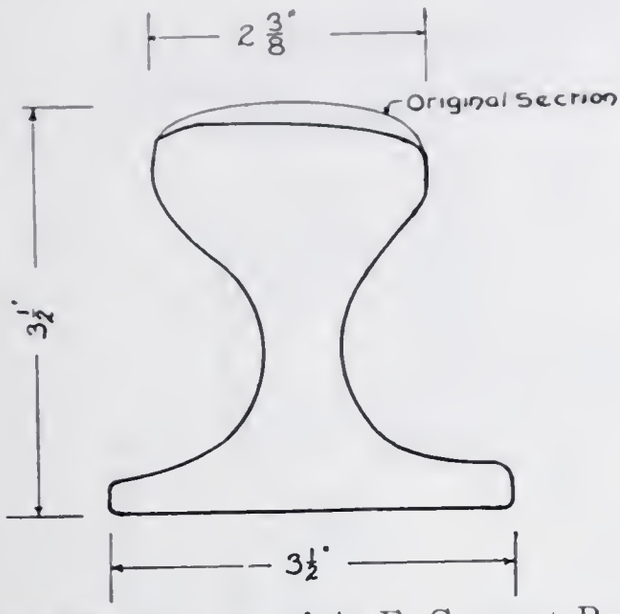

Fig. 34. Section of A. F. Creusot Rail.

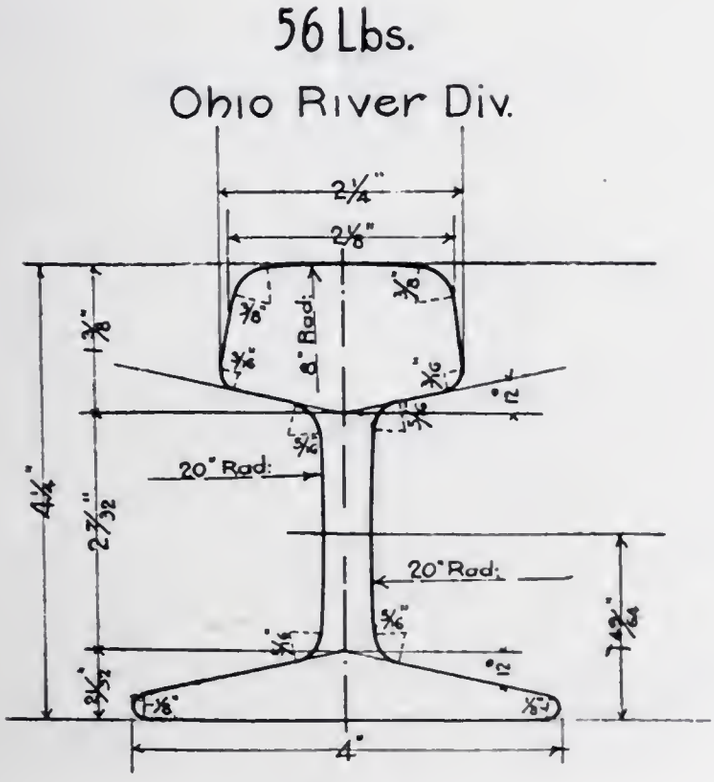

Fig. 35.

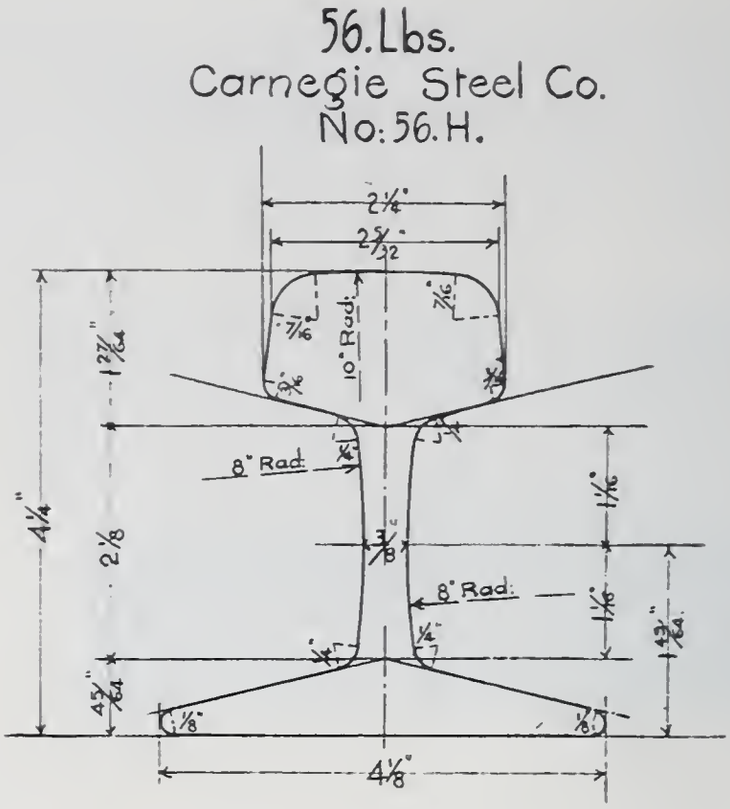
56. Lbs.
Carnegie Steel Co.
No: 56. H.
10" Rad.
8" Rad.
8" Rad.
4¼"
4⅛"

Fig. 36.

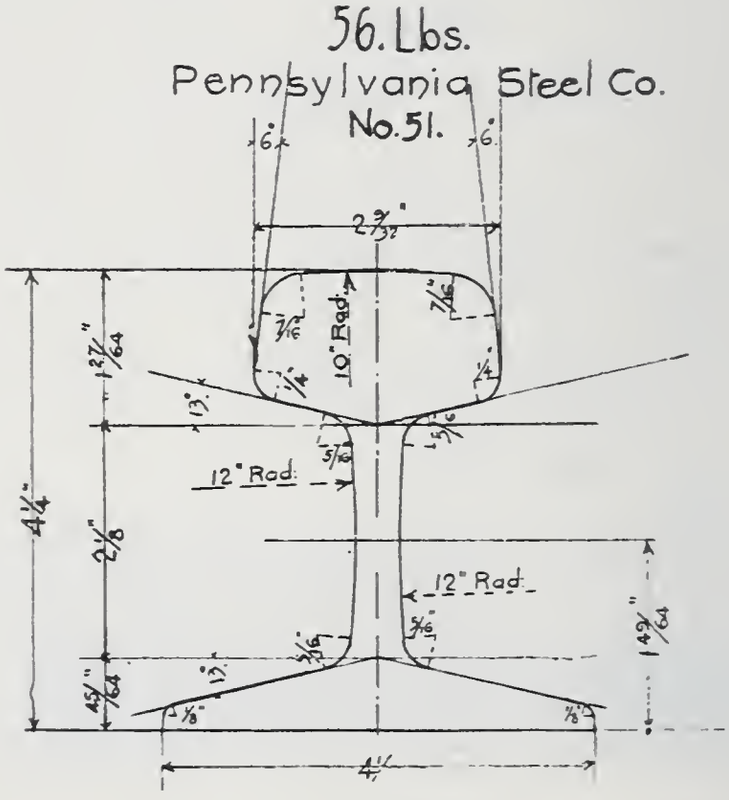
56. Lbs.
Pennsylvania Steel Co.
No. 51.
10" Rad.
12" Rad.
12" Rad.
4¼"

Fig. 37.

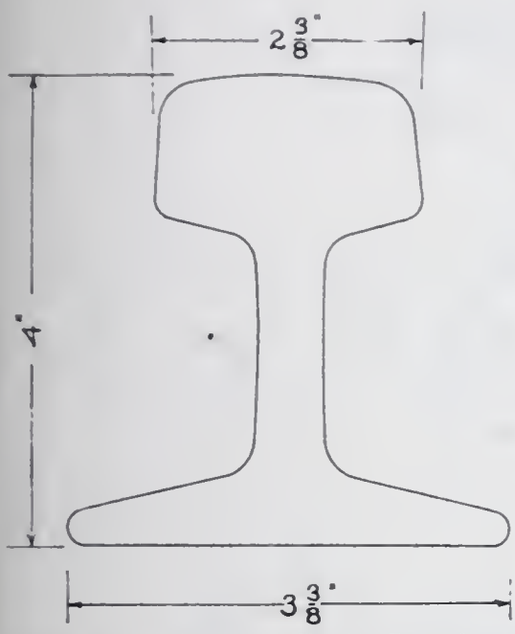

Fig. 38. 58 Lb. Rail Section. Pittsburgh-Bessemer Steel Co.

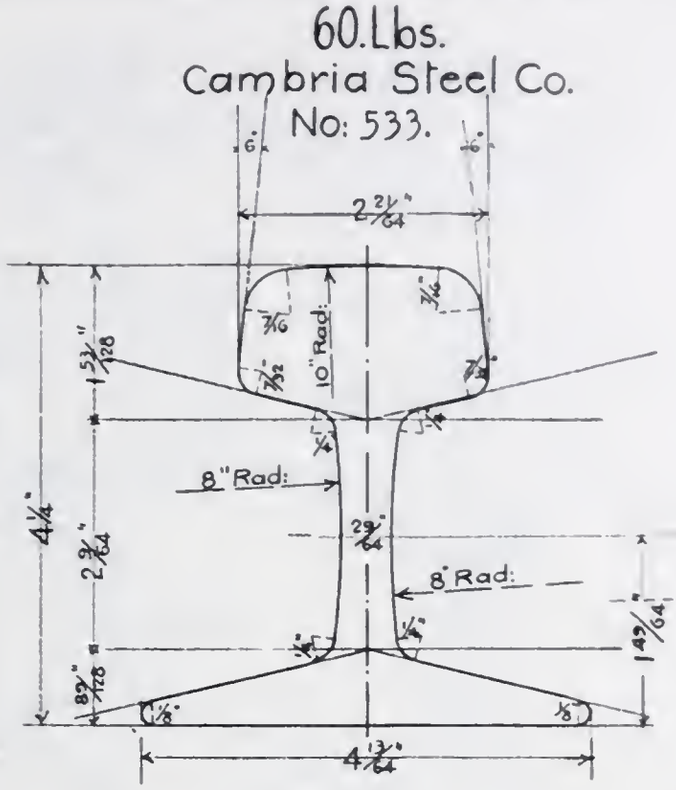

Fig. 39.

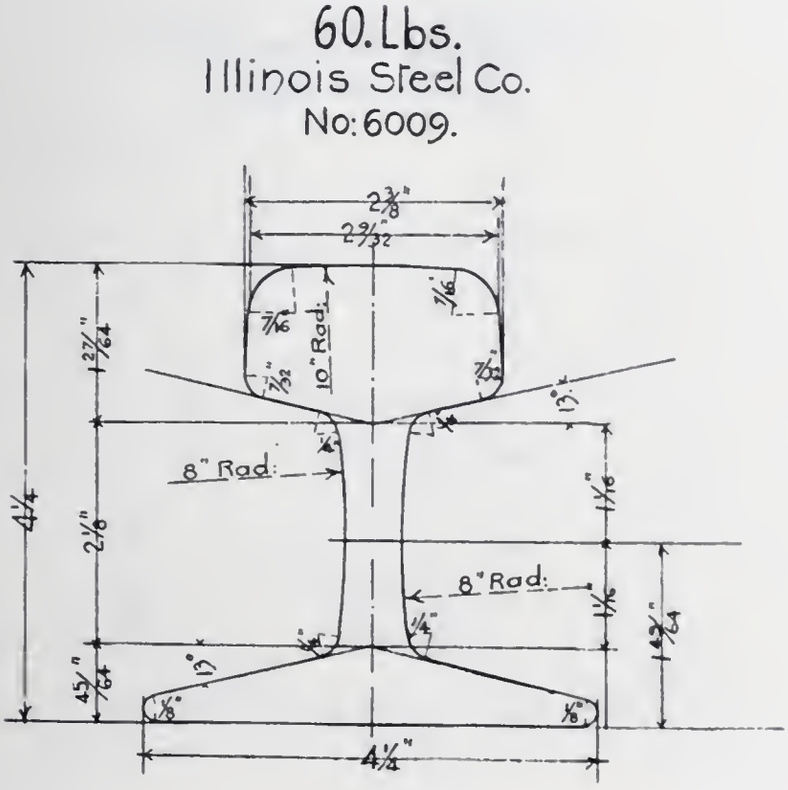

Fig. 40.

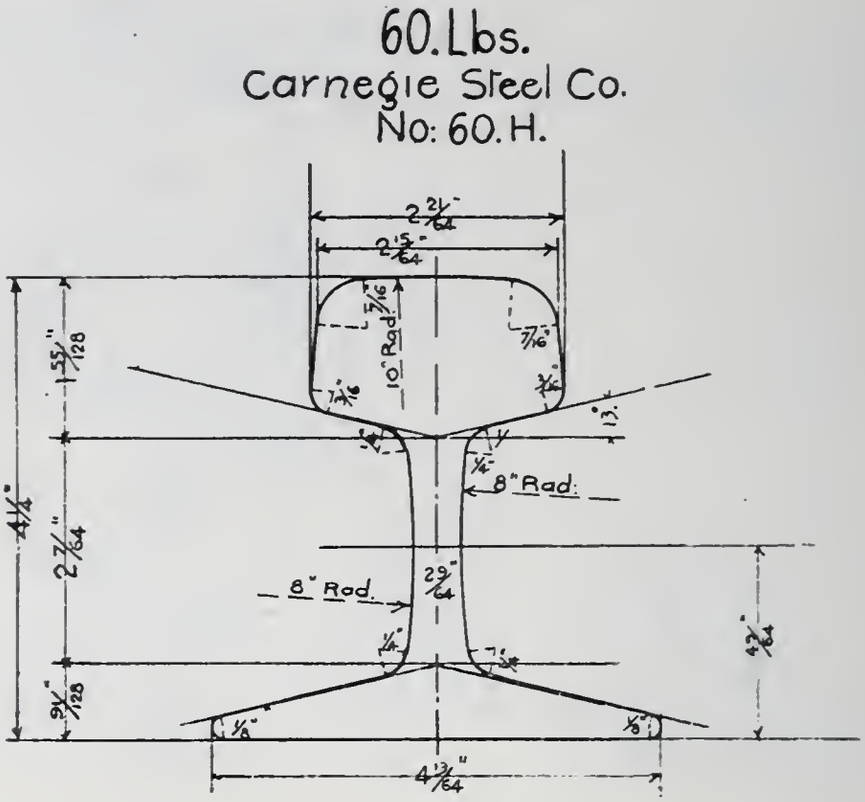
60. Lbs.
Carnegie Steel Co.
No: 60. H.
10" Rad.
8" Rad.
8" Rad.

Fig. 41.

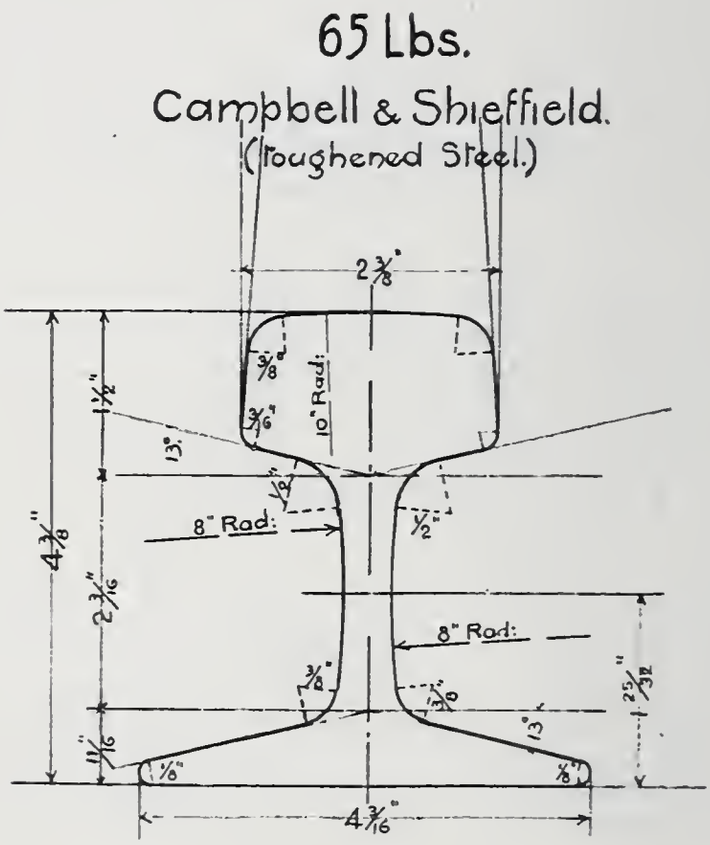
65 Lbs.
Campbell & Shieffield.
(Toughened Steel.)
10" Rad.
8" Rad.
8" Rad.

Fig. 42.

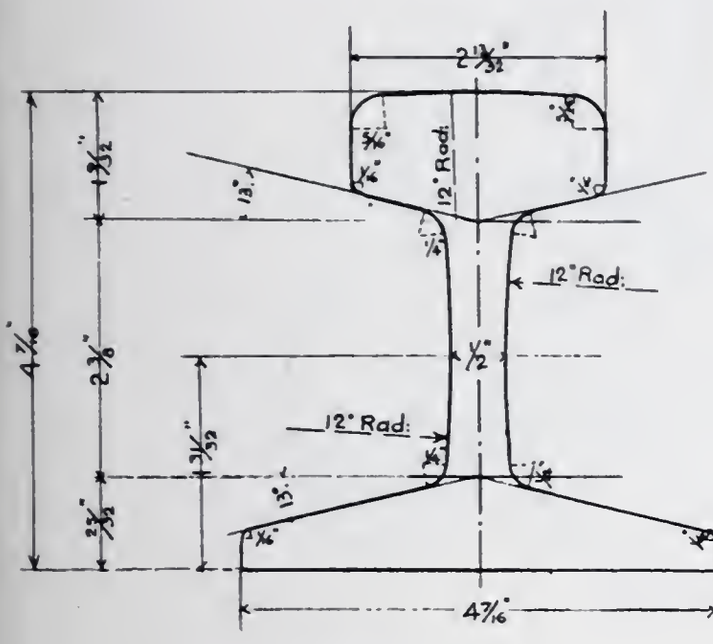

Fig. 43.

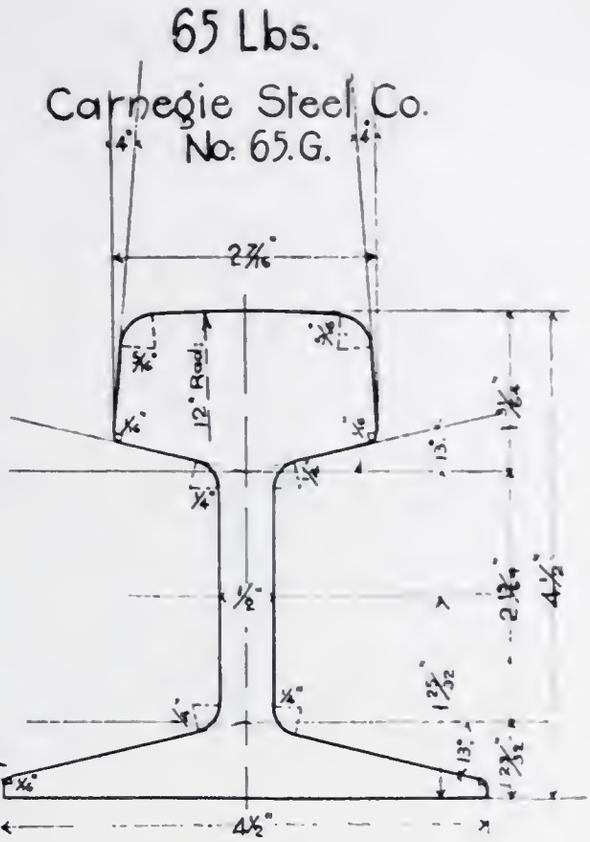

Fig. 44.

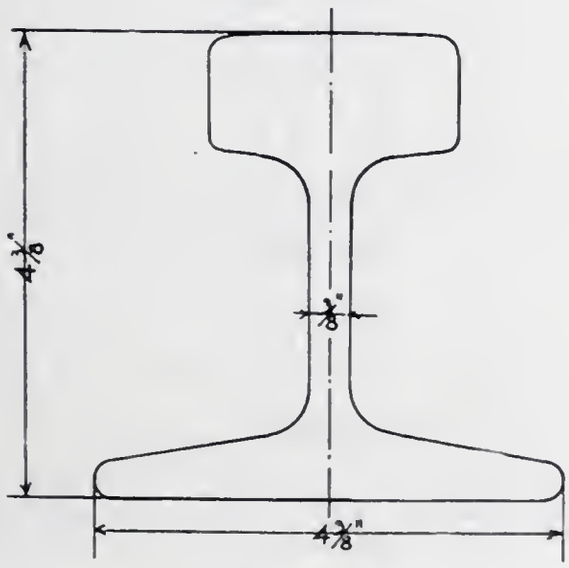

Fig. 45.

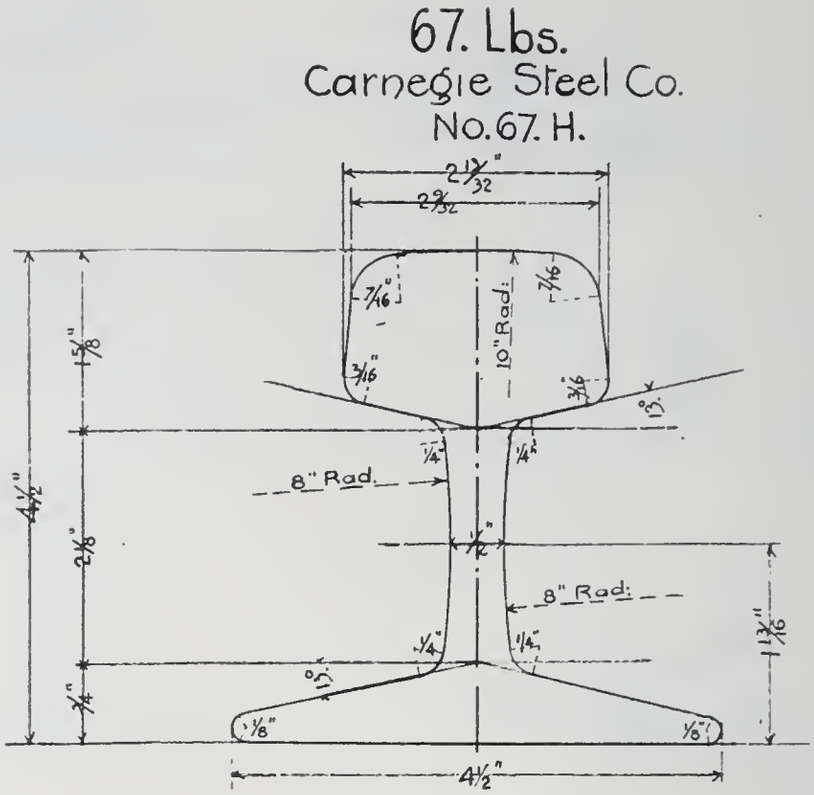
67. Lbs.
Carnegie Steel Co.
No. 67. H.
10" Rad.
8" Rad.
8" Rad.
4½"

Fig. 46.

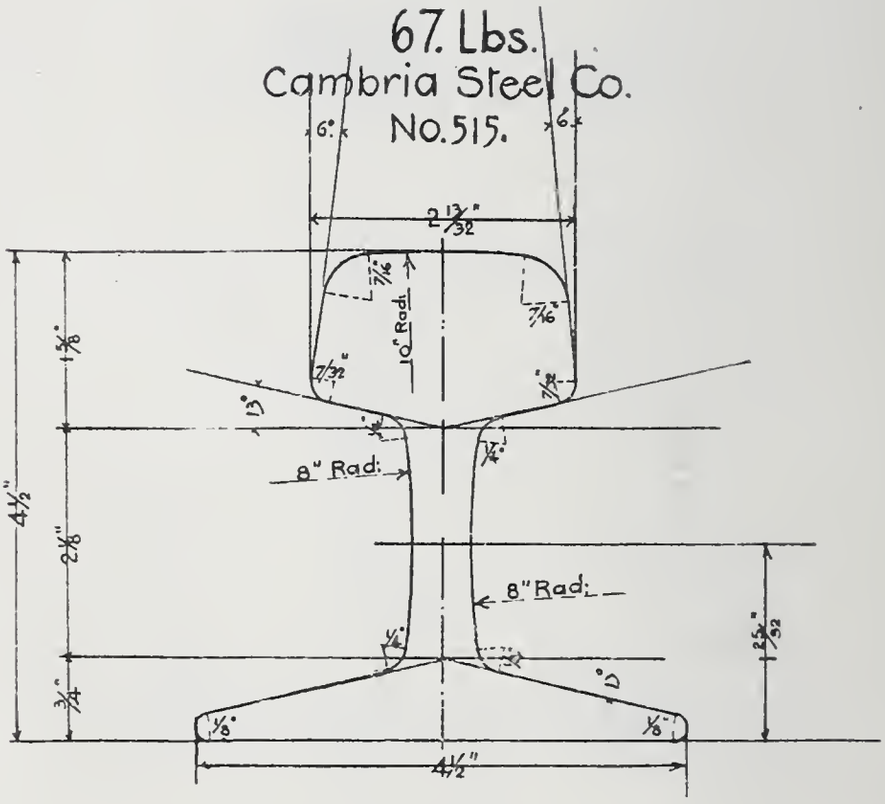
67. Lbs.
Cambria Steel Co.
No. 515.
10" Rad.
8" Rad.
8" Rad.
4½"

Fig. 47.

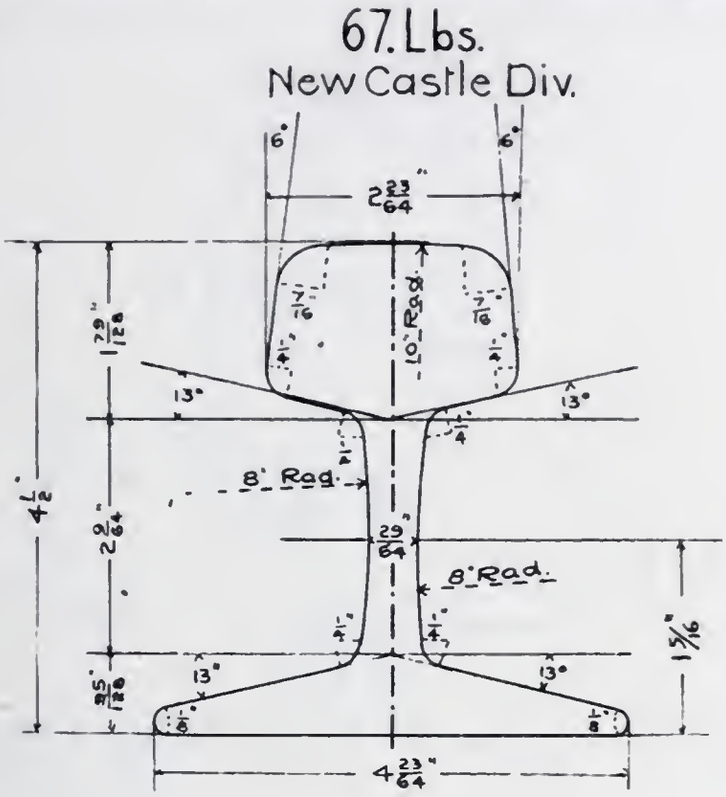
67. Lbs.
New Castle Div.
6°
6°
2 23/64"
7/16
10" Rad.
7/16
1/4"
1/4"
1 29/128"
13°
13°
1/4
1/4
8" Rad.
4 1/2"
2 9/64"
29/64"
8" Rad.
1/4"
1/4"
1 5/16"
25/128"
13°
13°
1/8"
1/8"
4 23/64"

Fig. 48.

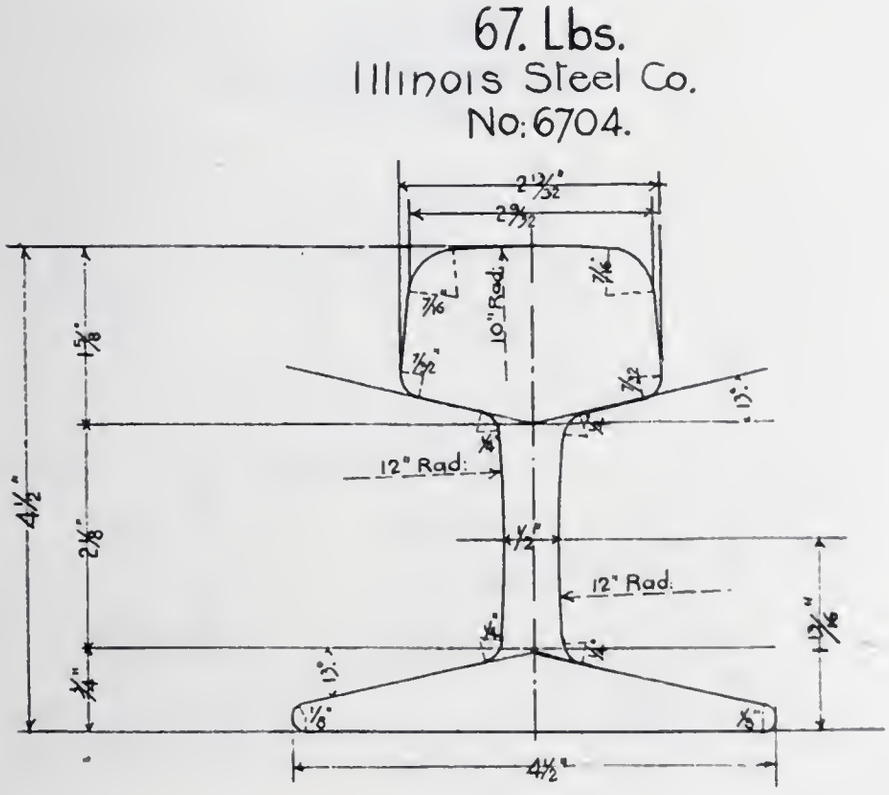
67. Lbs.
Illinois Steel Co.
No: 6704.
2 13/32"
2 9/32
7/16"
10" Rad.
7/16"
1 5/8"
7/32"
7/32
13°
1/4
1/4
12" Rad.
4 1/2"
2 1/8"
1/2"
12" Rad.
1 13/16"
1/4"
1/4
13°
1/8"
1/8"
4 1/2"

Fig. 49.

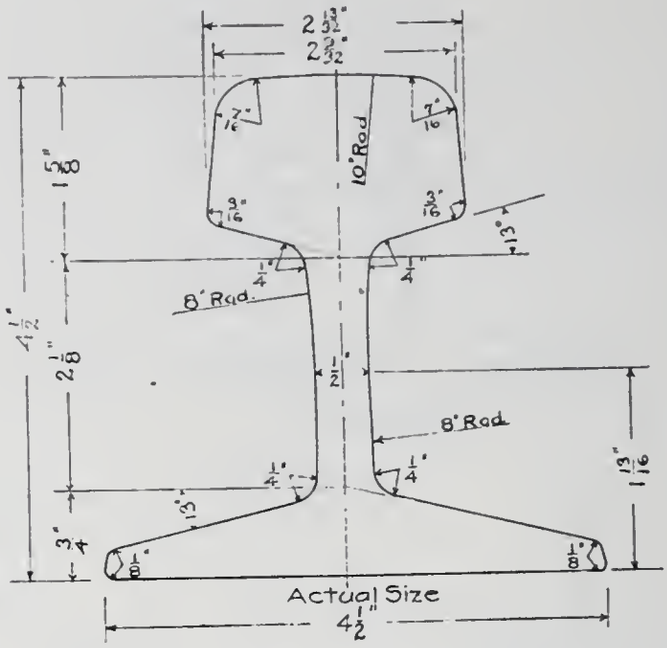

Fig. 50. Section of 67 Lb. B. & O. R. R. Rail.

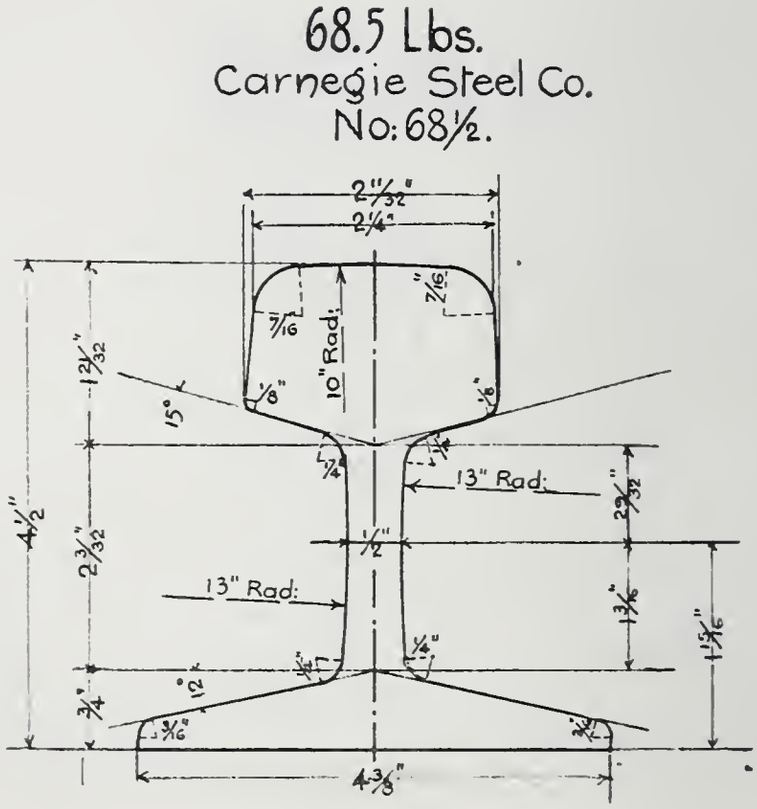

Fig. 51.

70. Lbs.

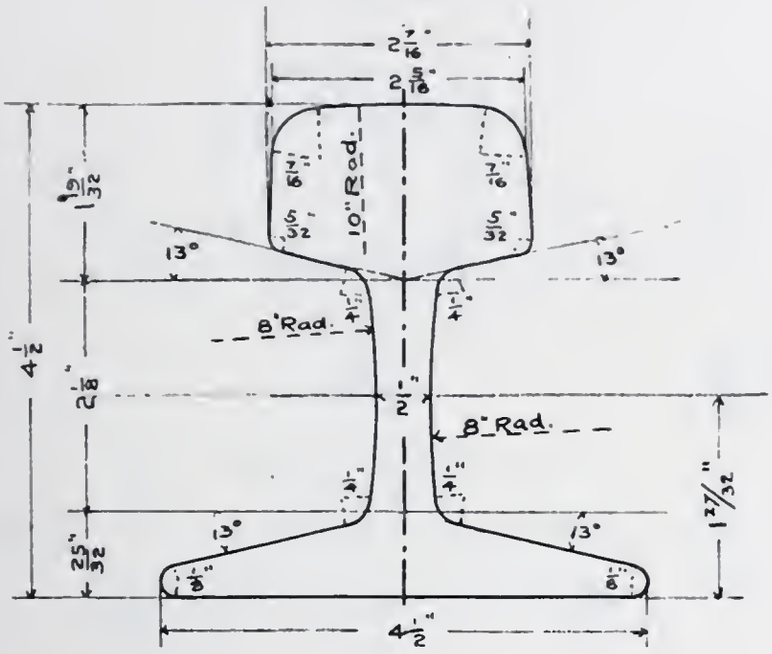

Fig. 52.

70. Lbs.
Cambria Steel Co.
No: 504.

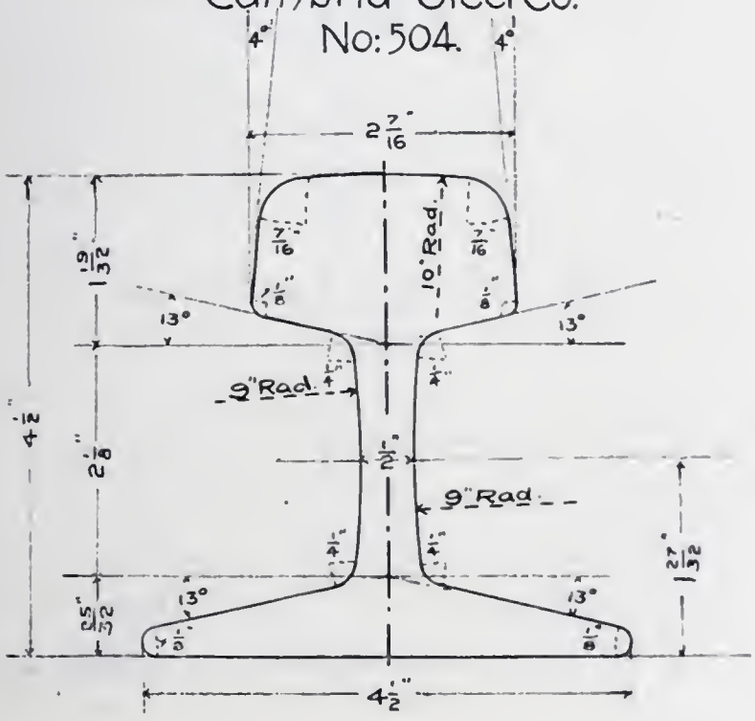

Fig. 53.

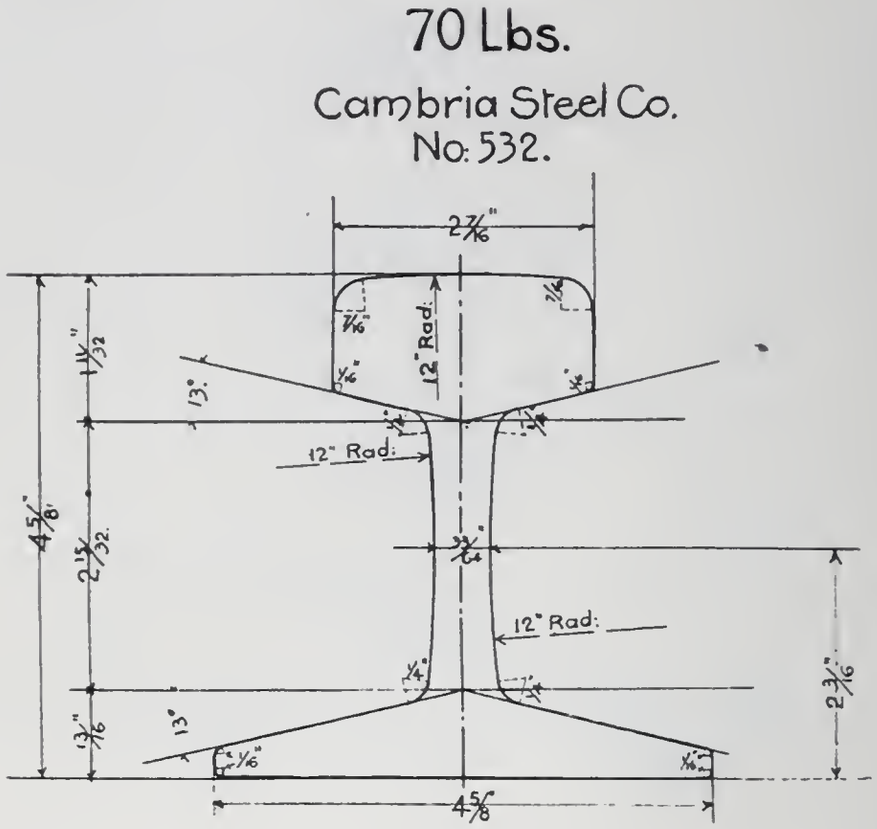
70 Lbs.
Cambria Steel Co.
No: 532.
2 7/16"
12" Rad.
13°
12" Rad.
4 5/8"
2 15/32"
12" Rad.
13°
4 5/8"
2 3/16"

Fig. 54.

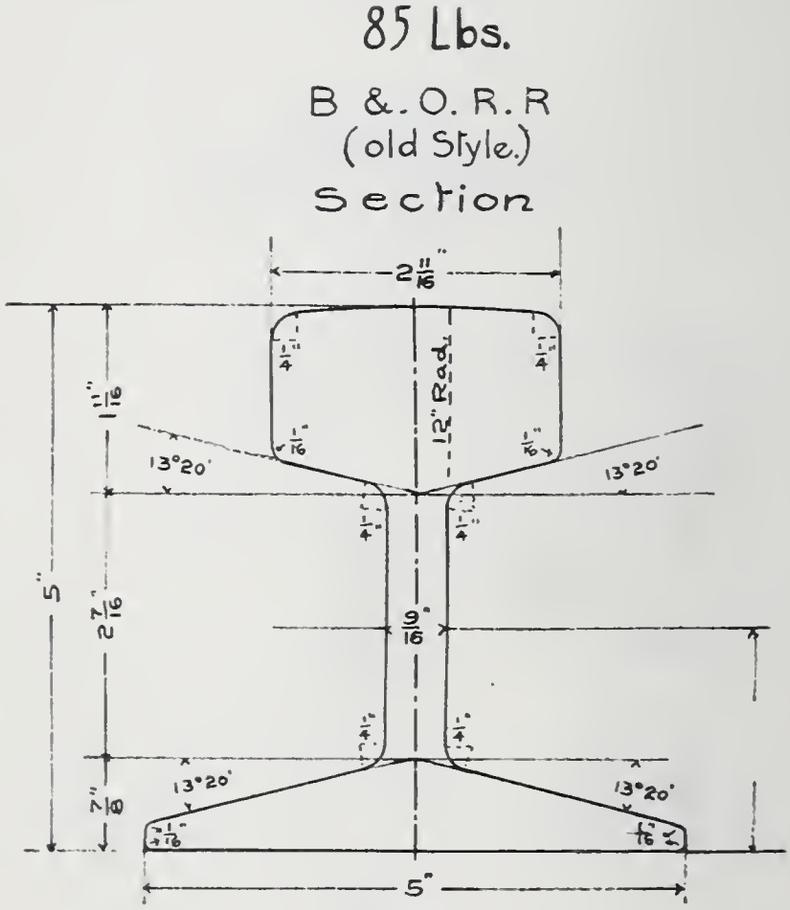
85 Lbs.
B & O. R. R
(old Style.)
Section
2 11/16"
12" Rad.
13°20'
13°20'
5"
2 7/16"
9/16"
13°20'
13°20'
5"

Fig. 55.

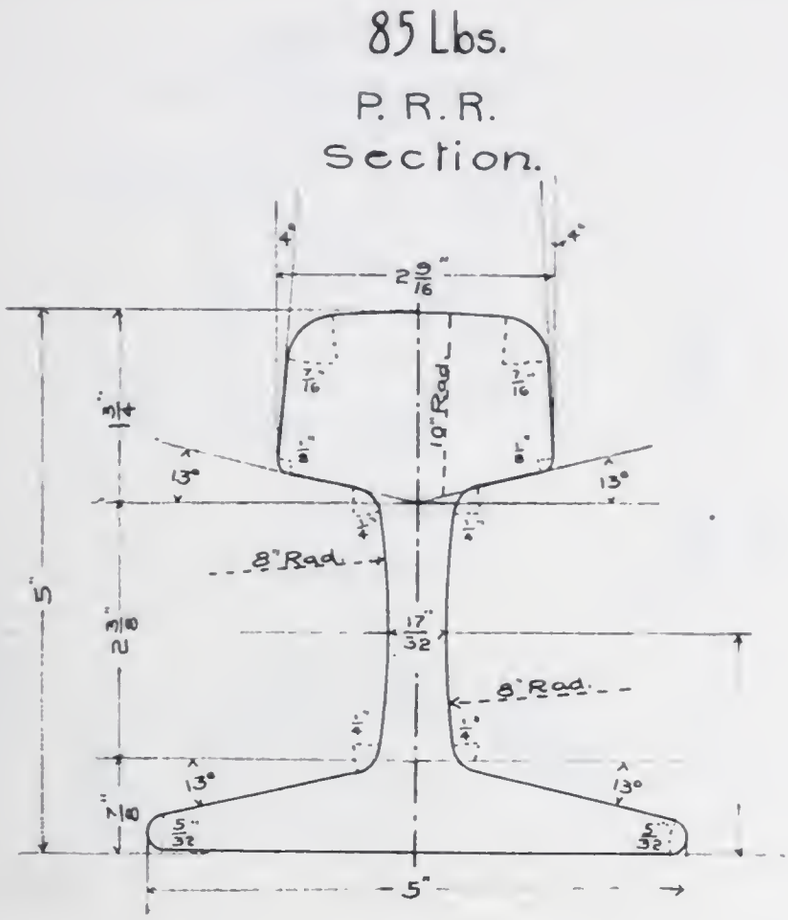

Fig. 56.

In 1887 the American Society of Civil Engineers appointed a committee to consider "the proper relation to each other of the sections of rails and wheels." After several progress reports, the committee finally reported, in 1893, submitting a series of sections of rails weighing from 40 lb. to 100 lb. per yard, varying by increments of 5 lb. These sections were adopted by the society and promulgated as A. S. C. E. standard sections. They met with favor and were adopted by many railroads. The 75, 80, 85 and 100-pound sections, shown in Figs. 57, 58, 59 and 60, were used on the Baltimore & Ohio.

In 1894 Mr. W. T. Manning, Chief Engineer of the Baltimore & Ohio Railroad, patented a rail designed to increase the amount of metal in the head and so increase the life of the rail, particularly the high rail on curves. The section was, in general, similar to the A. S. C. E. section, but its special feature was its unsymmetrical head (Fig. 61). A slight amount of metal was added to the top of the rail and about ¼ in. added to the flange

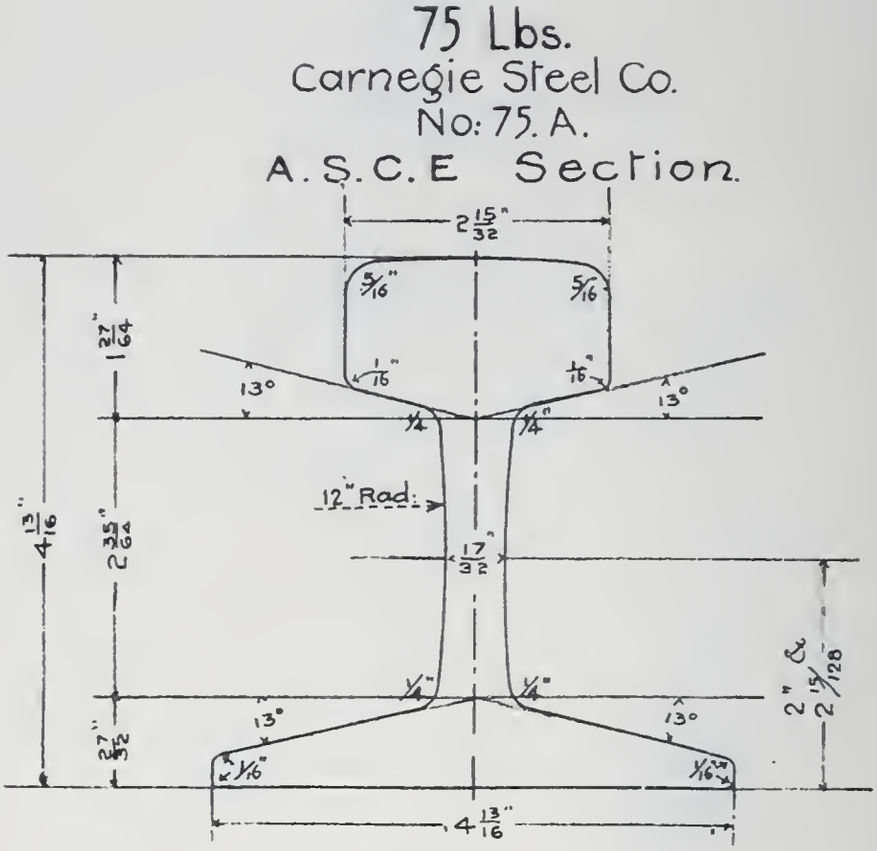
75 Lbs.
Carnegie Steel Co.
No: 75. A.
A.S.C.E Section.
2 15/32"
5/16"
5/16"
1 27/64"
1/16"
1/16"
13°
13°
1/4"
1/4"
12" Rad.
4 13/16"
2 35/64"
17/32"
2" & 2 15/128"
1/4"
1/4"
13°
13°
27/32"
1/16"
1/16"
4 13/16"

Fig. 57.

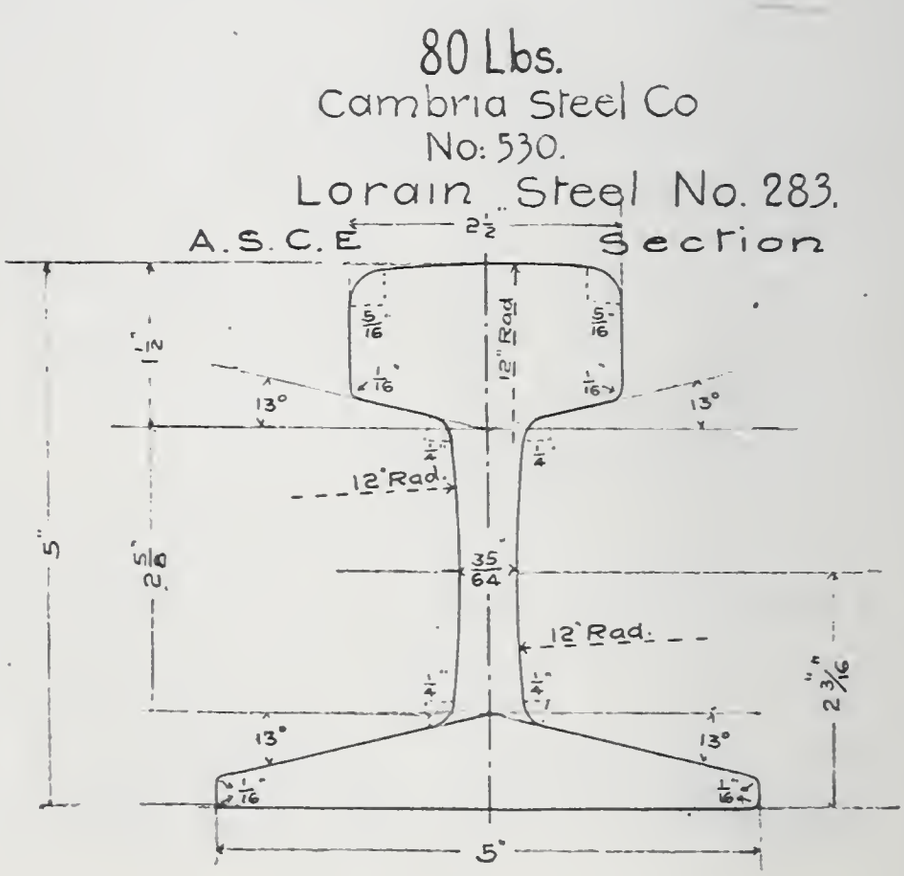
80 Lbs.
Cambria Steel Co
No: 530.
Lorain Steel No. 283.
A.S.C.E Section
2 1/2"
5/16"
5/16"
12" Rad.
1 1/2"
1/16"
1/16"
13°
13°
1/4"
1/4"
12" Rad.
5"
2 5/16"
35/64"
12" Rad.
1/4"
1/4"
2 3/16"
13°
13°
1/16"
1/16"
5"

Fig. 58.

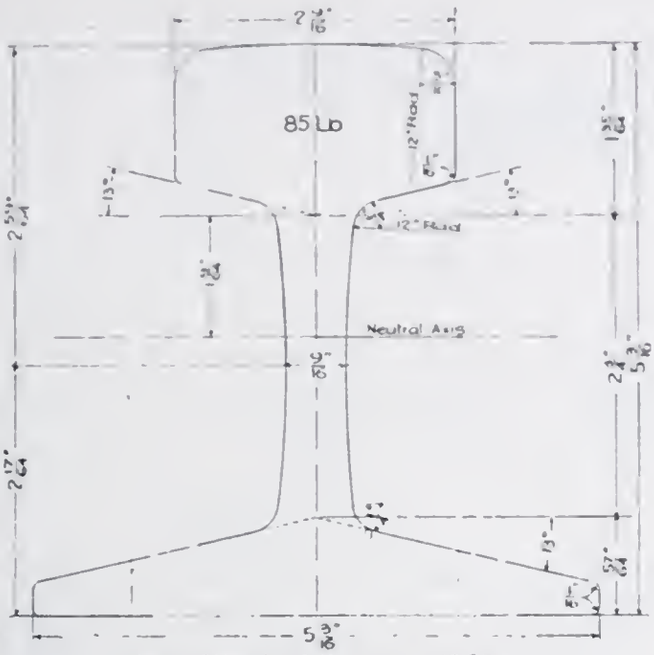

Area of Head = 3.49 Sq. in. = 42.0%
" Web = 1.74 " " = 21.0%
" Base = 3.07 = 37.0%
Total area = 8.30 100.0%
Moment of Inertia = 30.25
Section Modulus of Head = 11.25
Section Modulus of Base = 12.10

Fig. 59. Section 85 Lb. A. S. C. E. Rail.

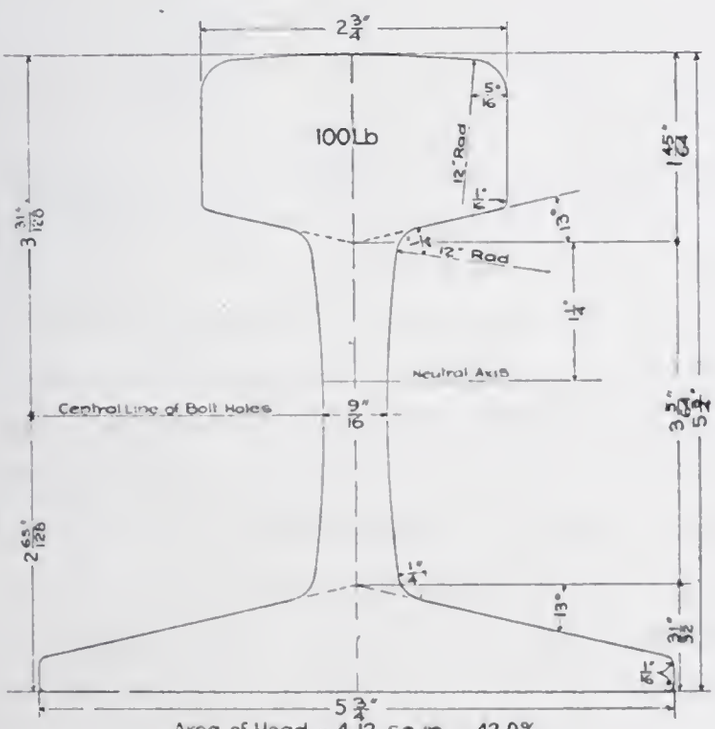

Area of Head = 4.12 Sq. in. = 42.0%
" " Web = 2.06 " " = 21.0%
" " Base = 3.62 " " = 37.0%
Total area = 9.80 " = 100.0%
Moment of Inertia = 43.80
Section Modulus of Head = 14.85
Section Modulus of Base = 15.64

Fig. 60. 100 Lb. A. S. C. E. Section.

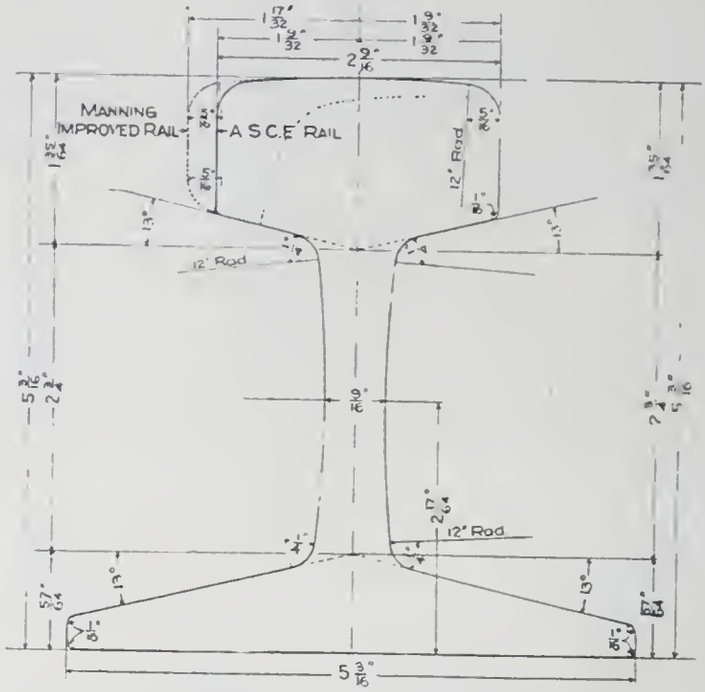

Fig. 61. 88 Lb. Manning Improved Rail.

side of the rail. A comparison of the distribution of the metal follows:

	Manning Section	*A.S.C.E. Section*
Metal in head.....	45%	42%
Metal in web	20%	21%
Metal in base	35%	37%

Five thousand tons of the 88-pound rail of the Manning Improved section were laid in track in 1899, 1900 and 1901. This rail was all put on the high side of curves, but as no direct tests were made on the same curves with the other sections, no direct comparison could be made. Although the wear obtained from the Manning rail was doubtless greater than from the 85-pound A. S. C. E. rail, there were several disadvantages that acted toward a decision not to purchase more of this rail.

Several records of rail purchases at about this period are indicative of the weight and kind of rail in use. In 1897, 10 300 tons of 85-pound A. S. C. E. rail were laid on the Baltimore & Ohio Railroad east of the Ohio River. In 1898, 10 000 tons were purchased of 80-pound rail for lines west of Ohio River. During this same year about 2700 tons of 85-pound, 60-foot steel rails were purchased. These 60-foot rails were originally bought by

the Columbia & Maryland Electric Railway, designed to parallel the Baltimore & Ohio between Baltimore and Washington. These were the first 60-foot rails laid on the Baltimore & Ohio, and were laid on what is now the Connellsville Division, and in the Baltimore tunnels.

In October, 1899, 43 500 tons of 85-pound steel rails were ordered at a contract price averaging $33.00 per ton.

About 1901 it was felt that the steel rails in use were not giving satisfaction. The consequent agitation resulted in the sections recommended by the American Railway Association, and known as the A. R. A. sections.

In 1908 the Baltimore & Ohio Railroad Company purchased for test about 4000 tons of 90-pound rail rolled to conform to the newly adopted A. R. A. sections. This rail was laid in the fall of 1908. The "A" section, on account of its comparatively narrow base and thin head, was laid in track with light curvature and medium traffic, it having been thought inadvisable to put this rail on heavy curves, as the tendency to cant would be greater than with sections having a wider base and also on account of the rapid head wear.

The "B" section was laid in track of heavy curvature, and on the heavy mountain grades under extremely heavy traffic and adverse roadbed conditions. The performance of this rail was carefully watched and the results were so satisfactory that, in 1909, 37 000 tons were purchased, including some of the 100-pound "A" and "B" sections, which are now the standard sections (Figs. 62 and 63).

Since 1909 all rail purchased has been of A. R. A. sections, with the exception of 3000 tons of 75-pound A. S. C. E. which were laid on the south end of the Ohio River Division in 1911.

The next important step in the advance of rail was the gradual but sure change from Bessemer to the more serviceable open-hearth steel. The first open-hearth rails used on the Baltimore & Ohio Railroad were rolled in 1906, by the Tennessee Coal, Railroad & Iron Company and the Maryland Steel Company. Only a small tonnage was purchased, all of which was placed in test with Bessemer steel. The results of these first tests were not encouraging for the future use of open-hearth steel, so that none was purchased in 1907.

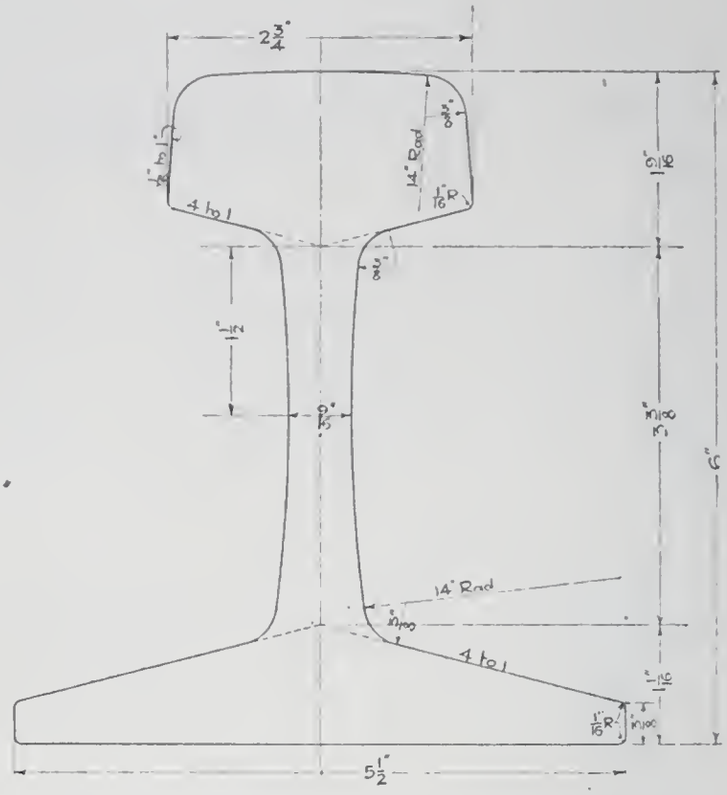

Fig. 62. 100 Lb. A. R. A. Section "A."

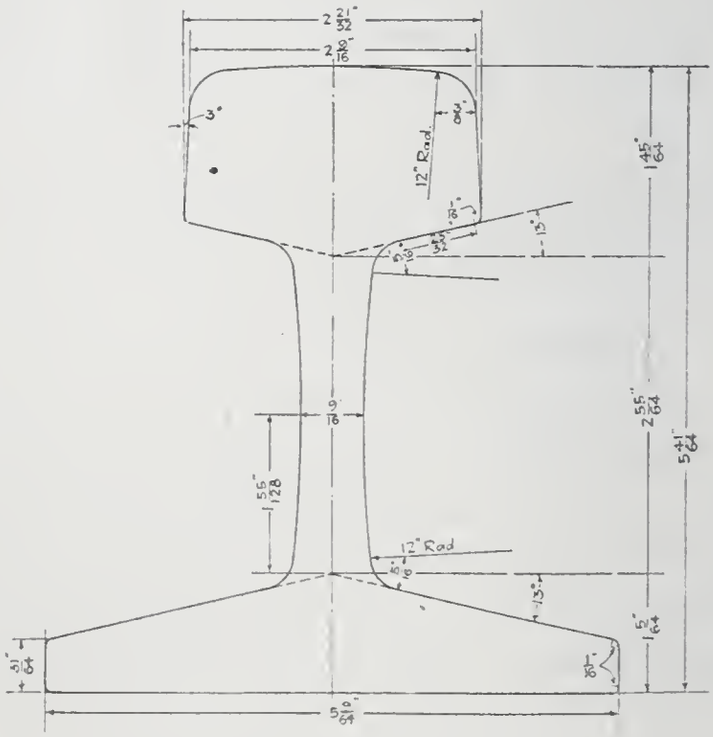

Fig. 63. 100 Lb. A. R. A. Section "B."

In 1908, however, about 1500 tons of open-hearth steel rail were purchased. From numerous comparative service tests with Bessemer steel rail the superior wearing qualities of the open-hearth steel was so marked that from this date there was a steady increase in the tonnage of open-hearth rail laid until, in 1912, the entire tonnage of rail laid was of open-hearth steel.

At various times service tests of some considerable tonnage have been made of rail rolled from alloy steels. As early as 1903 and 1904 some 2000 tons of nickel steel rail of the 85-pound A. S. C. E. section was laid in track under severe traffic conditions. Later quite extensive tests were made of steel rails treated with titanium alloy. A small amount of manganese steel rail was given a severe test on Kessler's Curve, and but recently 1000 tons of vanadium steel rails were laid in test on the mountain grades. The results of these tests substantiated, to some extent at least, the claims made for the alloy steel rails.

While the present standard rail section of the Baltimore & Ohio Railroad is the 100-pound A. R. A. Section B, some steps have been made towards the "heavier than 100-pound" rail. In 1914 a portion of the Belt Line, Baltimore, including the Howard Street Tunnel, all in the electric zone, was laid with rail weighing 120 pounds per yard of a section proposed by the Rail Manufacturers' Association. This rail has been subjected to heavy traffic under most exacting conditions, and has given such good service as compared with the lighter weight rail previously used as to portend the more extended use of a "heavier than 100-pound" rail in the near future.

AN EFFICIENT GAS-FIRED BOILER INSTALLATION

By J. C. Hobbs*

Service Requirements: Before entering into a detailed description of the installation and giving you the performance records, it is perhaps best to acquaint you with the service requirements and the conditions affecting the construction and operation of the steam generating plant under discussion.

The most important factor entering into the practical phase of the problem, is *load factor*. This term should not be confused with the term *plant factor*. *Load factor* as used here, is the ratio between the average output and the maximum instantaneous output demanded. An installation which is correctly balanced for a high load factor load, will probably be top-heavy with fixed charges when used on a low load factor. With a high load factor, the fuel item becomes of the most importance, while with a low load factor the high overhead costs, or fixed charges, as they are more generally designated, force the fuel item into the back-ground. Again, with high load factors the fuel item demands considerable attention, but with very low load factors, the unit cost of fuel has but little bearing upon the total cost of the product.

Building Heating is the kind of service for which this plant was designed. This Union Arcade, in which our Society is housed, is heated from the William Penn Hotel steam plant. The load factor of a steam heating system is almost entirely determined by the weather. The service is seasonable, and with the exception of a comparatively small amount of hot water and refrigerating service, all the demand occurs during the season beginning about October 15th and ending May 15th. The maximum demand naturally occurs during the coldest weather, or at least during the most severe weather, such other conditions contributing as direction and velocity of the air movement; and the relative humidity also having a considerable influence. For heat-

* Assistant to Superintendent, Power Stations, Duquesne Light Company, Pittsburgh.

ing service only, the average yearly load factor approximates 25 percent.

Fig. (1) shows the distribution of output by months. You will note the large peak and the comparatively small output.

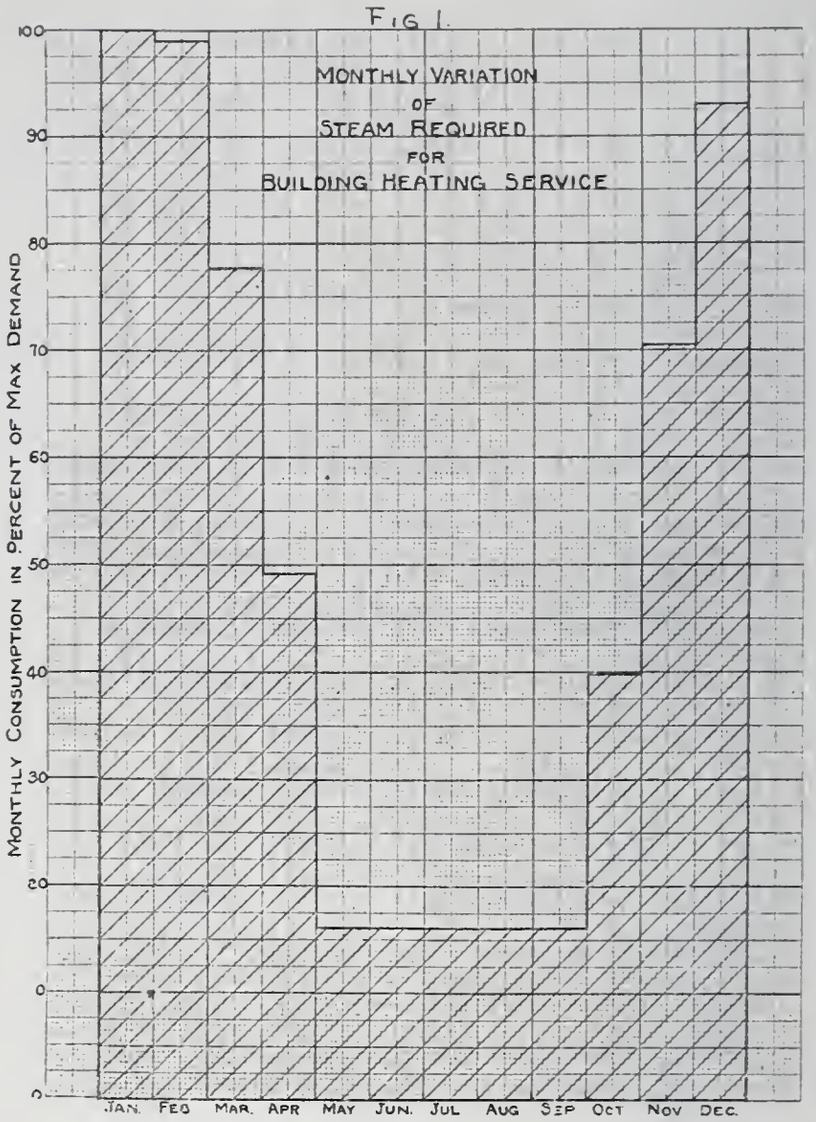

Fig. 1.

It might be mentioned that one reason why a straight exhaust steam heating system in connection with electrical energy generation is not entirely successful, is because of the *low* load factor on the heating part of the service. The large loss due to inefficient operation in connection with 75 percent of the electrical output is much greater than the gain due to saving part of the heat in connection with the other 25 percent of the output, when the steam and electrical output *are* coincident. In other words, non-condensing operation with almost double steam consumption during so much of the time represents a greater loss than the

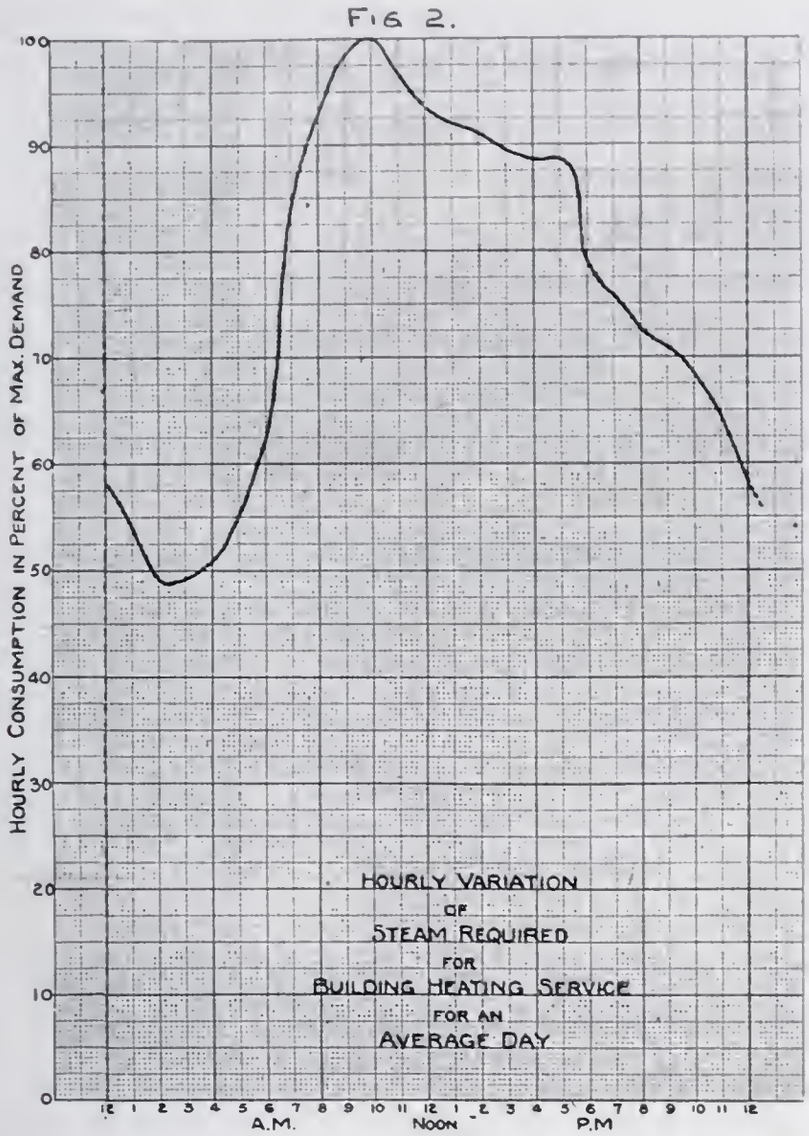

Fig. 2.

saving during the heating months. Another point to be noted is the lack of co-incidence of the heating and lighting, even during the various hours of the day.

If the electric demands are large enough to make sufficient exhaust steam available during the very early morning hours, then a great surplus of exhaust steam will be available when the electric load reaches its maximum later in the day.

The total amount of exhaust steam may equal the amount required for heating during any one day, but the chances are that it will not be available at the time it is needed. The average yearly temperature is 52.6 degrees F., or only a few degrees below the temperature requiring artificial heat, but in winter we buy coal and clothes to keep us warm, and in the summer we buy ice and cold cocoa-cola to keep us cool. Lack of sufficient

heat storage is the only reason, because 52 degrees is quite a comfortable temperature. In buildings the amount of heat storage, while greater than that of electrical energy storage (without the use of storage batteries), is a matter more properly measured in minutes than in hours.

This size of the steam generating equipment being larger than can be repaired in the time allowed by the heat storage makes it necessary to install spare equipment even though the load factor is very low, and equipment is standing idle the greater part of the year.

The larger the generating station, the smaller the percentage of spares required. When two or more stations are tied together, the effect on the percentage of spares required is the same as with one large station having the same capacity. Service must be maintained during the entire twenty-four hours of the day, and those installations having hot water or ice machines, during the entire twelve months of the year.

Conditions Affecting Construction and Operation: The plant is located under the William Penn Hotel, the boiler room floor being fifty feet below the street surface. On account of being right in the best business section of the city, and directly under the finest hotel, it is absolutely necessary that the plant be operated noiselessly, and that the coal and ash handling systems shall not be dirt and noise nuisances. From the standpoint of the public, one of the great benefits derived from central supply systems, is the reduction of the number of sources and the amount of dirt and smoke, thus making the city cleaner.

With coal as the fuel, a system of hoppers, conveyers, and storage bins is necessary. The narrowness of the Pittsburgh streets makes the unloading item in itself one which demands a careful study. If coal handling is a problem, then ash removal is a greater one, because ash must be elevated, whereas coal will run by gravity through an open chute into the plant. On account of its location, the water supply must be obtained through the city mains. Fortunately, the water consumption is greatly reduced by the return of the condensed steam after being used in the heating systems, so that only a *make-up* supply is required.

The blow-down water must not only be elevated to discharge it into the sewer, but a sufficient storage capacity must also be maintained in order to allow it to cool before it is discharged.

The working conditions are good notwithstanding the fact that not a bit of daylight enters the plant, and all the air for ventilation is drawn in by fans. Although the plant has an available capacity of between four thousand and five thousand horsepower it can easily be operated by one man, in fact, one man is all that is actually used. An electric sub-station adjoins the boiler room and the operators of each act together in case of an emergency.

Type of Installation Adopted: Believing that the solution of any problem depends entirely upon the combination of conditions entering into that problem, the designers endeavored to so combine the basic elements constituting this steam generating plant that a harmonious whole would be the result. After all, there is not such a great difference between art and science. In both, success is only the selection and proper blending of the pigments, so to speak, entering into each composition. In either, a mistake in the selection of even one element, or the wrong proportioning of the quantities of even one element, will result in failure which will irritate the senses of those who see it. Certainly there is such a thing as an engineering temperament, just as surely as there is an artistic temperament.

Stack: One of the problems usually included in a boiler plant design is in this case a fixed condition. Unconsciously the architect who designed the hotel, or the financier who approved the same design, fixed the height of the stack. At least, the top of the hotel was the minimum height, and there was no occasion for exceeding the 350 feet thus imposed. The location and shape of the stack were also determined by the building design. In turn, the design of the stack was determined even to the insulation.

To take up the difference between the expansion of the steel stack and that of the building, the stack was made in short sections, and supported from the building steel.

A word as to why a self-supporting steel stack with a brick lining was not used, might be of interest. Lack of area forced the use of rectangular stack. Structural features of bracing (in the architect's opinion) determined the sectional design. For engineering reasons, the original design was greatly modified. The original drawings called for a 3/8 in. clearance at each joint. Inasmuch as there was one joint specified for each story in height, the available intensity of draft would have been an uncertain if not an unknown quantity, if it had been built with a "ventilating" opening, 3/8 in. wide around the circumference, at each of the twenty joints proposed. The final design has less than one-half as many joints and these instead of being left open were sealed by the special sand and asbestos joint shown in Fig. 3.

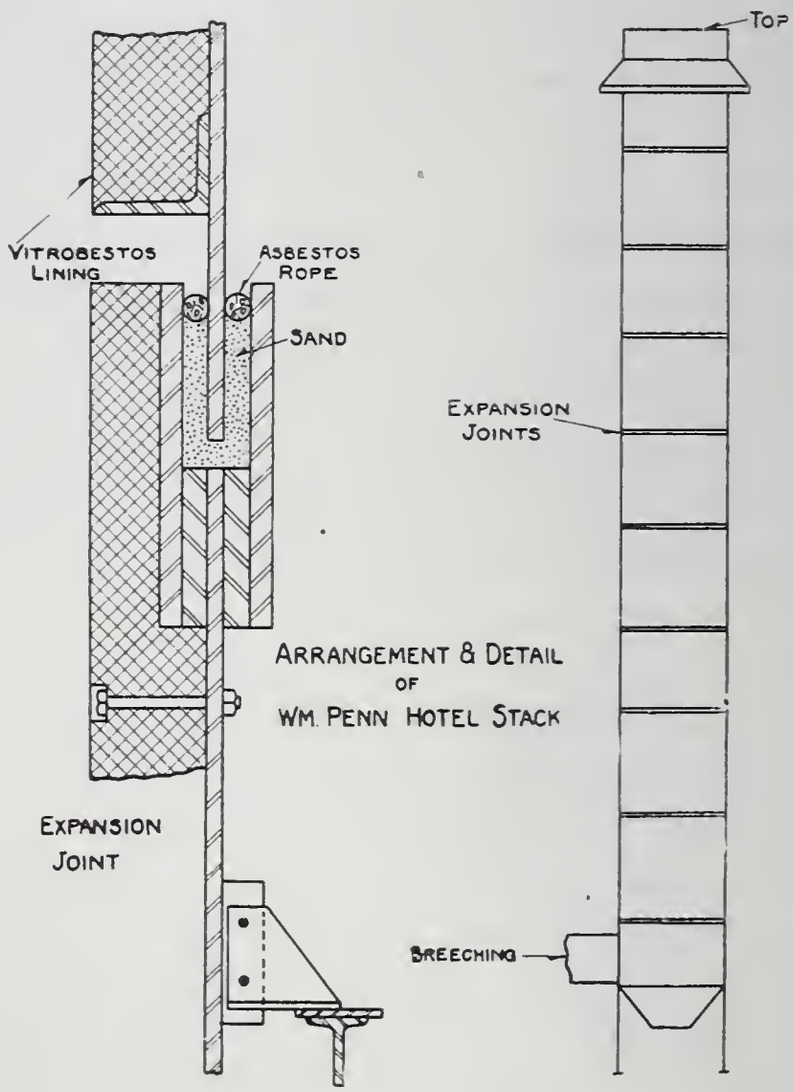

Fig. 3.

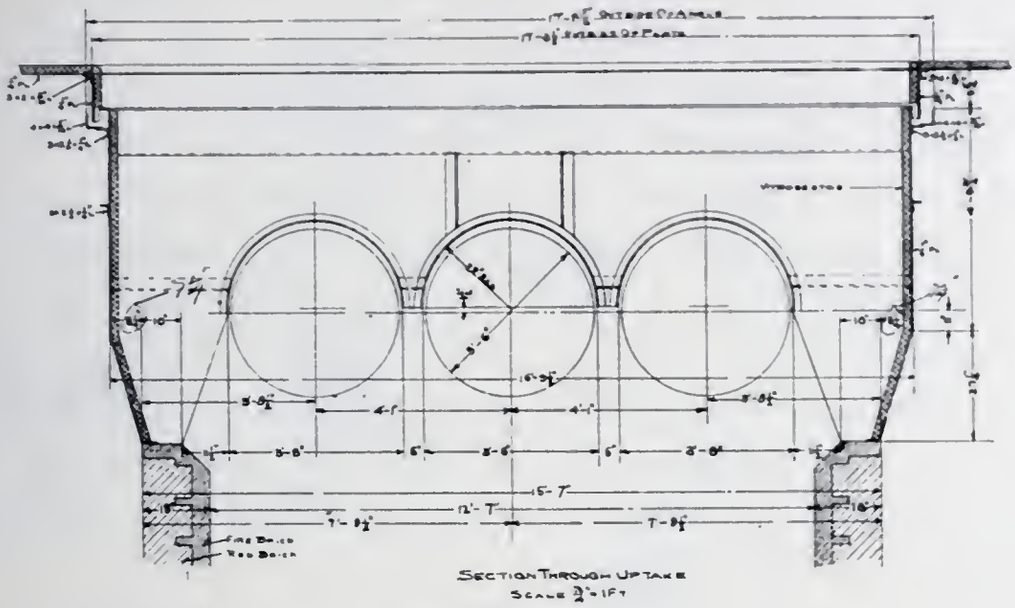

Fig. 4.

Brick insulation was not used because in the rectangular form, the heat would have caused it to cave in, there being no natural arch as in a round stack. The asbestos insulation is thinner, smoother, and gives more area.

Breeching: The principal points which are called to your attention are the easy bends, the method of caring for expansion and the application of the insulation.

Fig. 4 shows a detail of the type of nozzle connection designed to permit expansion. The insulation is applied to the inside of the nozzle and to both the inside and outside of the breeching proper instead of on the outside only, as in many installations. Insulation on the outside only, while fairly effective as an insulation to reduce the radiation, is dangerous. It is perfectly possible even with a first-class boiler setting, to have a temperature high enough to collapse a steel breeching, if the heat is held in by outside covering. In fact, a serious fire was caused in a new installation within a block of here, by secondary combustion in the breeching. Shutting a damper, or closing the ashpit doors on a hot fire, or even the firing of waste wood will make a gas producer out of most any boiler setting. The application of inside insulation increases the life of the breeching. Care was taken to see that the insulation did not contain elements which, under operating conditions, would cause the steel to corrode.

Boilers: Two of the four boilers are of the longitudinal type and two are of the cross-drum type of the water tube boilers manufactured by the B. & W. Co. Both types are of the same rated capacity, being 600 h.p., and each having 294-4 in. tubes arranged with twenty-one rows in width and fourteen rows in height. The first boilers installed were of the longtitudinal type and were baffled with a special vertical baffle built of a high temperature cement. The economic results obtained with this cement baffle were very good at first, but it was soon found that the cement was falling out, and the stack temperatures going up, so a change to the horizontal type of baffling was made, which is described later in the paper.

The reason the standard three-pass vertical baffling was not used, is that with gas fuel a very small draft intensity in the furnace is required. The high stack without a special baffling is a source of danger from an economic standpoint, an excess of air being drawn through the burner. Instead of reducing the draft intensity by damper regulation, it was decided that it would be better to draw the gas over a longer path, and to impinge it against the tubes at a higher velocity in order that more heat be extracted from the products of combustion, and a higher efficiency obtained.

With gas fuel, a very small excess of air is required. The volume and weight of the products of combustion are much smaller per unit of capacity than is required when coal is used, so that smaller gas passages can be allowed. Fig. 5 shows the original vertical baffling.

It was found, however, that an economic baffling could be constructed at a cost even lower than for the standard three-pass baffle. This is of the horizontal type, and is shown in Fig. 6. The horizontal baffle is shown in a cross-drum boiler, but the tube arrangement is exactly the same. On account of the chances of forming a dirt pocket at the rear of the second pass, this setting is not particularly recommended for coal; however, the horizontal baffling has been used quite successfully with coal, and with the addition of some device or arrangement for the removal of the dust from the pockets, I believe it will prove very successful. The simplicity and ease of installations and renewals of the baffles and tubes make the horizontal type particularly attractive.

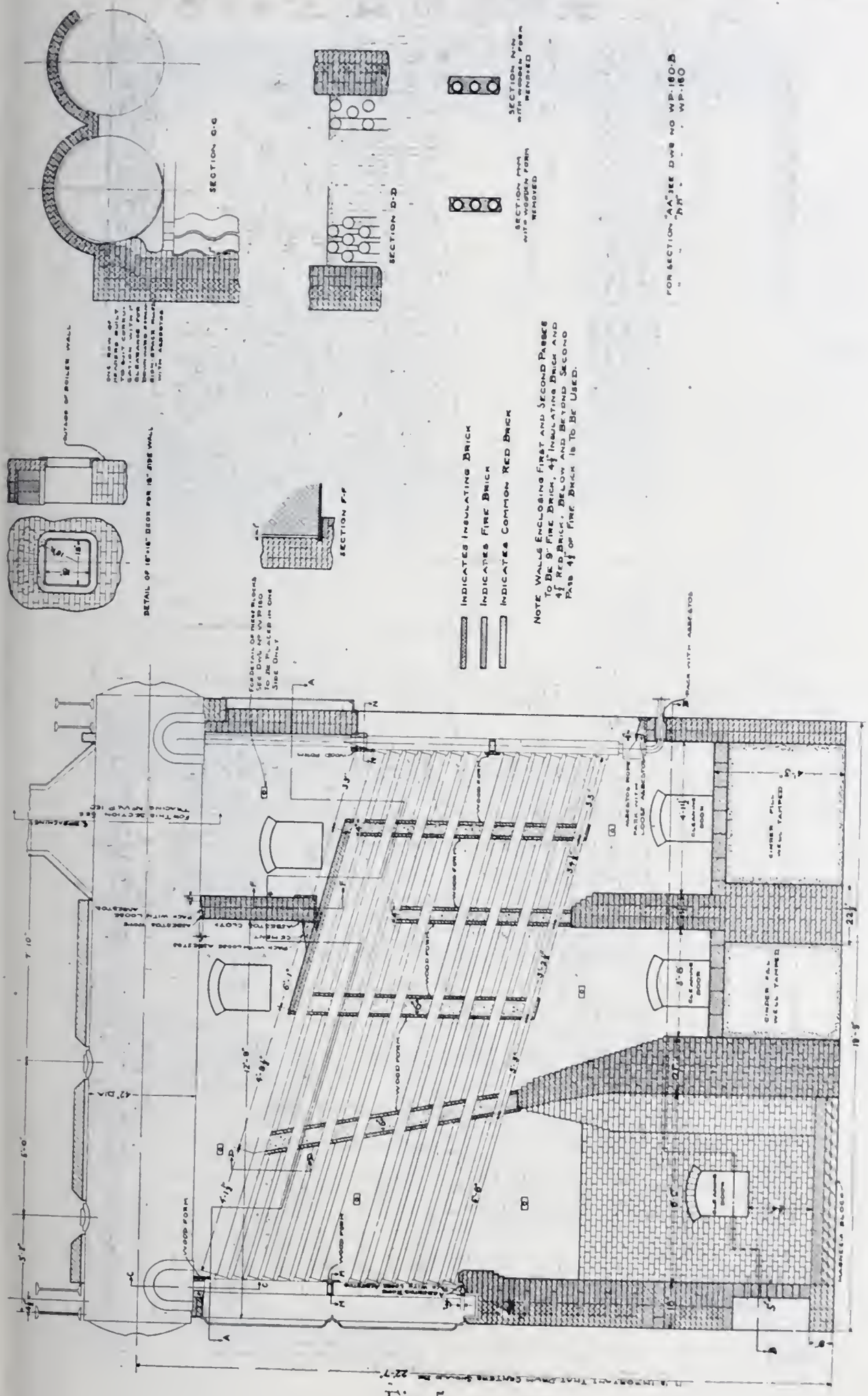
SECTION G-G
SECTION D-D
SECTION F-F
INDICATES INSULATING BRICK
INDICATES FIRE BRICK
INDICATES COMMON RED BRICK
NOTE WALLS ENCLOSING FIRST AND SECOND PASSES TO BE 9" FIRE BRICK, 4½" INSULATING BRICK AND 4½" RED BRICK, BELOW AND BEYOND SECOND PASS 4½" OF FIRE BRICK IS TO BE USED.
WOOD FORM
CINDER FILL WELL TAMPED
HARDENED BLOCK

Fig. 5.

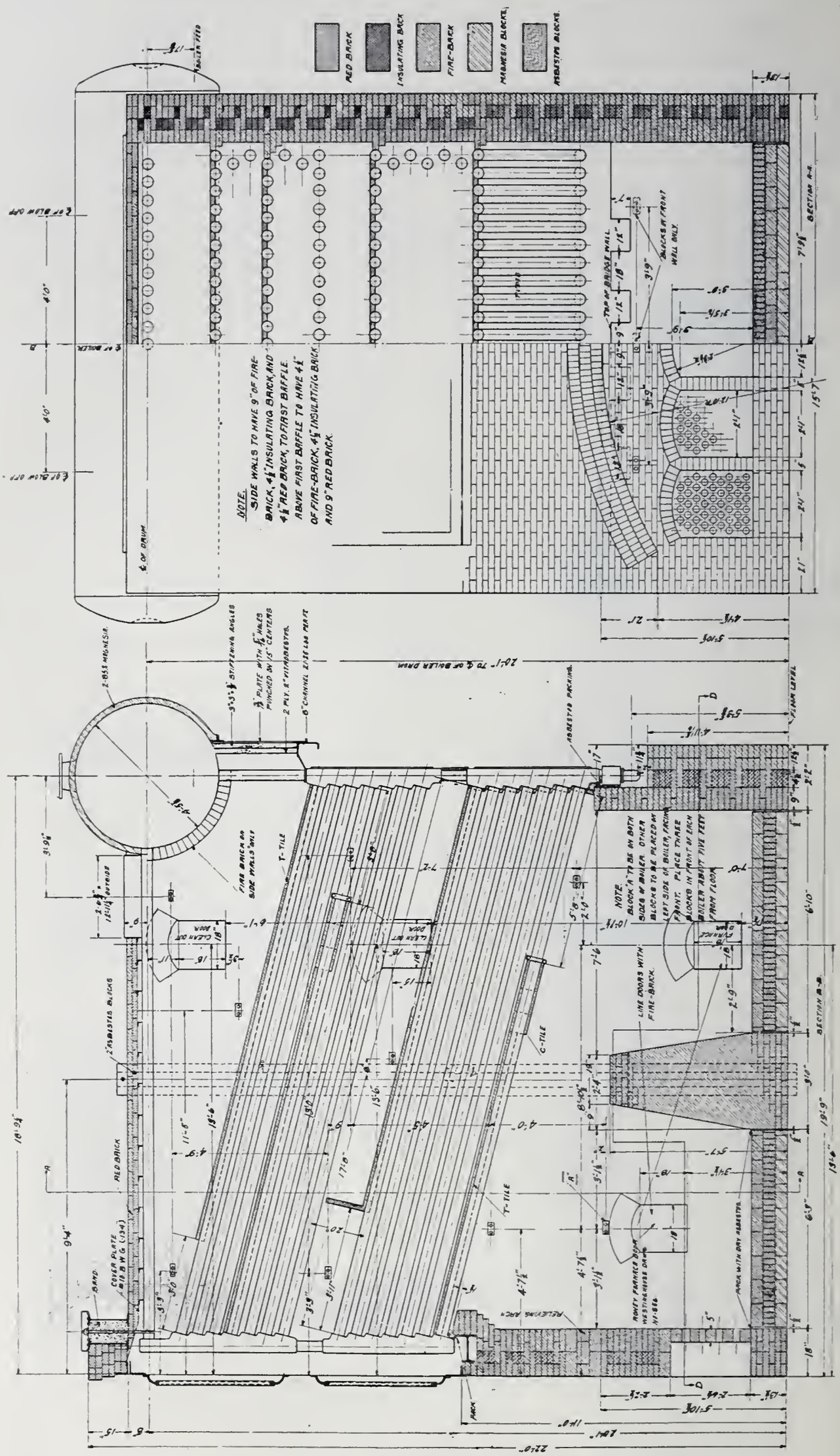
RED BRICK
INSULATING BRICK
FIRE-BRICK
MAGNESIA BLOCKS
ASBESTOS BLOCKS
NOTE.
SIDE WALLS TO HAVE 9" OF FIRE-BRICK, 4½" INSULATING BRICK, AND 4½" RED BRICK, TO FIRST BAFFLE. ABOVE FIRST BAFFLE TO HAVE 4½" OF FIRE-BRICK, 4½" INSULATING BRICK AND 9" RED BRICK.
SECTION A-A
SECTION B-B
T-TILE
G-TILE
FIRE BRICK ON SIDE WALLS ONLY
NOTE.
BLOCK A TO BE ON BOTH SIDES OF BOILER. OTHER BLOCKS TO BE PLACED ON LEFT SIDE OF BOILER FACING FRONT. PLACE THREE BLOCKS IN FRONT OF EACH BOILER ABOUT FIVE FEET FROM FLOOR.
LINE DOORS WITH FIRE-BRICK.
BACK WITH DRY ASBESTOS
RELIEVING ARCH
COVER PLATE
BAND
RED BRICK
2-ASBESTOS BLOCKS
CLEAN OUT DOOR
CLEAN OUT DOOR
2-85 H.P. HIGHES H.R.
3"x3"x½" STIFFENING ANGLES
¾" PLATE WITH ½" HOLES PUNCHED IN 1½" CENTERS
2 PLY, 8" HYDROSTA.
6" CHANNEL 12.25# LAP PLATE
20'-1" TO ℄ OF BOILER DRUM
FLOOR LEVEL
ASBESTOS PACKING
BACK
22'-0"

Fig. 6.

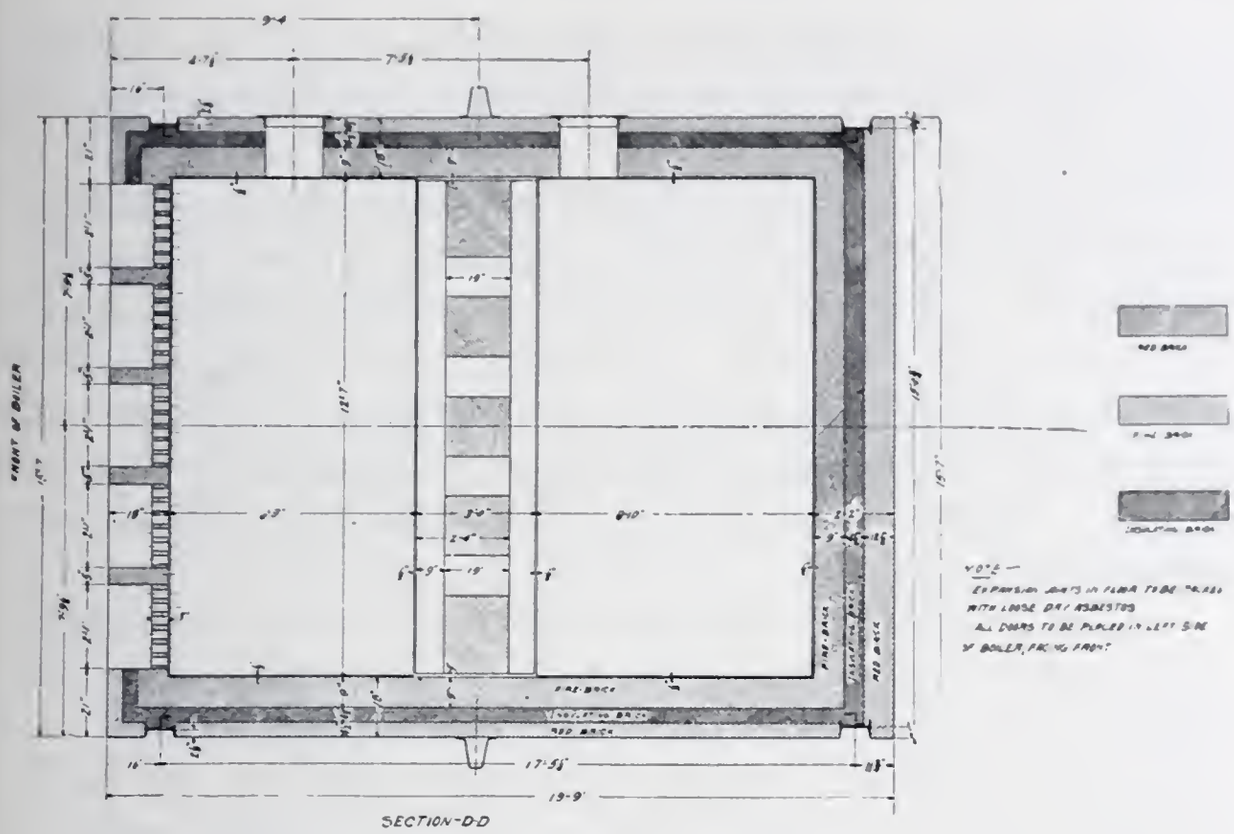

Fig. 6a.

Furnace: The striking feature of the furnace design is its extreme simplicity.

The selection of fuel is, of course, the determining factor in the design of the furnace. In fact, the kind of fuel is the determining factor of the whole plant design, but can only be determined after a thorough analysis of the entire problem. It is not enough to determine which fuel is the cheapest per b.t.u. as purchased. The following is an *outline* of the principal items which constitute the cost of steam:

1. Maintenance and fixed charges on all equipment except building which is included in *rent.*
2. Heat delivered to, and obsorbed by the boiler.
3. Labor, including administration, supervision, workmen's compensation, insurance, vacations, etc.
4. Water, including the cost of purifying.
5. Miscellaneous supplies and expenses.
6. Power for operating auxiliaries.
7. Rent, included in interest on investment, maintenance and depreciation, if building is owned.

Item No. 1 includes the maintenance on boilers, furnaces, piping, coal and ash handling equipment (if coal is used for fuel), and in fact all maintenance charges except that on the building proper. The maintenance and fixed charge item is the one which is apt to be overlooked or given less consideration than it deserves. This is the item that is so much affected by the kind of fuel which is used. Coal requires a very much more expensive equipment than gas. Fig. 7 is intended to show the costs of steam corresponding to the various unit costs of either coal or gas. This curve can be used to make the final decision as to the kind of fuel.

Another and very important point to be kept in mind while making the selection, is the *efficiency* of the furnace and boiler, which can be obtained under *operating* conditions. Even with coal fuel, of different composition, we know that it is not always the fuel which costs the least per b.t.u. as bought, which is the most economical. A cheap coal which gives trouble from clinkering is often an expensive coal because the same percentage

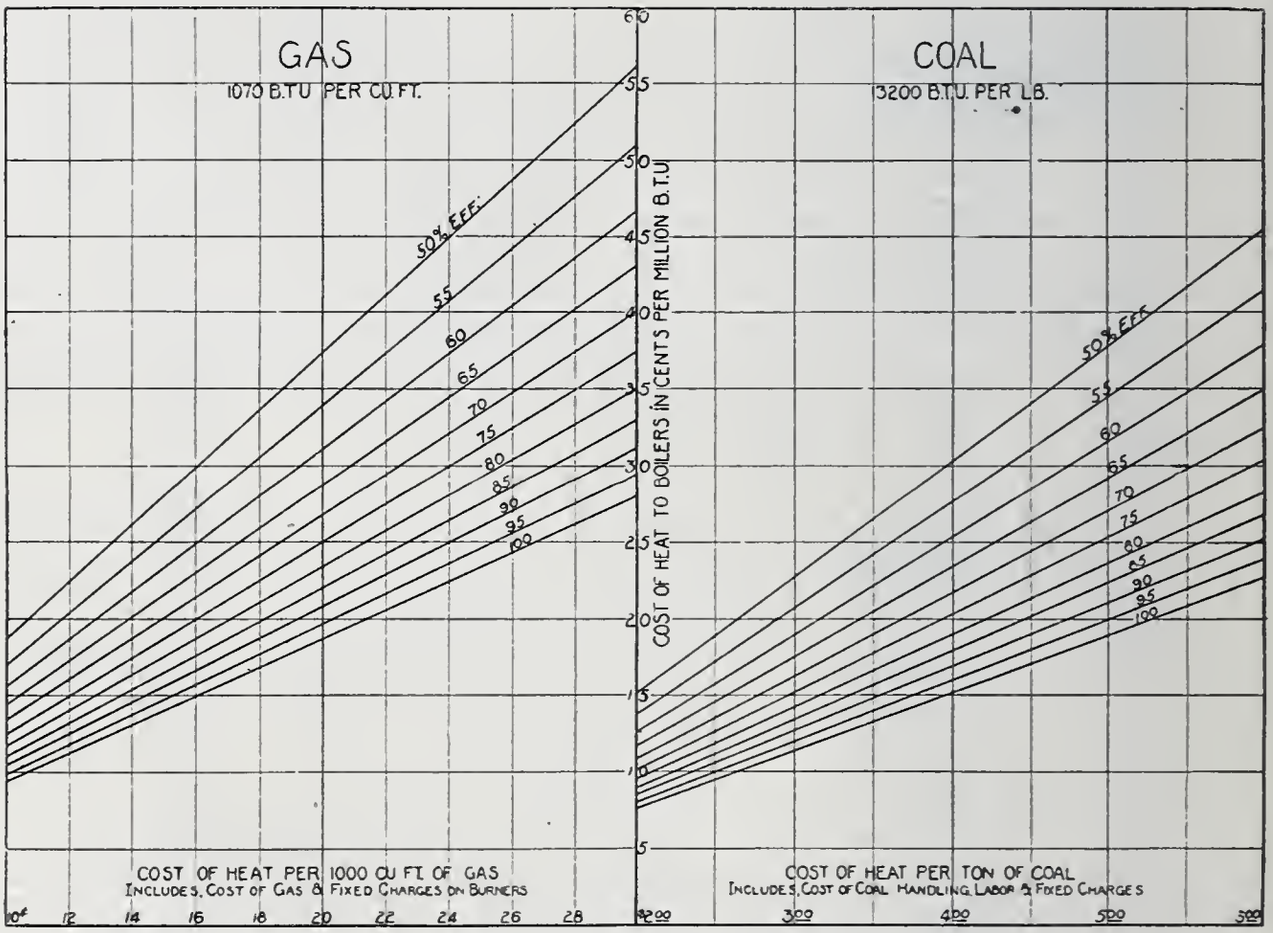

COMPARATIVE FUEL COSTS

Fig. 7.

of heat is not practically available. The difference between coal and gas is even more marked. The ashpit loss which may amount to from two to ten and even fifteen percent with a coal fuel is entirely eliminated when gas is used. The other great loss, namely that due to excess air, is less, and is more easily controlled with gas than with coal, because the furnace conditions can be maintained constant.

Item No. 3, that of labor, is also considerably affected and it too in favor of gas, because firing conditions are easier, boiler and furnace maintenance is less, and there is no labor required for either the operation or maintenance of coal and ash handling equipment.

The fourth item is not affected to a great extent, except that no water is required for wetting down ashes when gas is used. Items Nos. 5, 6 and 7 will also be affected but not to any great extent except that the power for operating stokers and coal and ash handling equipment will not be required, when gas is used.

The method of solving for the kind of fuel has been given, rather than a statement showing the size of plant and conditions under which the one fuel should be used in preference to the other, because with the cost of fuel and particularly the cost of equipment changing so much, any such statement would be obsolete before it was published. As a matter of information, however, it is stated that at the time this plant was first considered the total costs would have been approximately equal with gas or coal, when the maximum load on the plant amounted to about one thousand five hundred horsepower. At lighter loads, the gas was much the cheaper and at heavier loads the coal showed a saving. Since then, however, a great increase in the price of coal and an equal increase in the cost of coal handling equipment and stokers, amounting to approximately 100 percent, and an increase in the price of gas amounting to about 50 percent, have changed the situation so that the costs are even at a much higher load.

The design of the furnace for gas, which was the fuel selected, was determined almost entirely by the conditions present in this particular installation. Only a little weight was given to the gas furnace designs found in Pittsburgh, and in the gas fields

of West Virginia, in fact the Pittsburgh designs were entirely discarded, and only the basic principle of one type of burner design, found in West Virginia, used. The burner being the most important part of the combustion apparatus, considerable attention was given to it.

The reasons why the commercial burners now on the market were not used are:

1st. The air and gas could not be easily controlled with any degree of certainty.

2nd. At low ratings or with low gas pressure, trouble from *burning back* was experienced.

3rd. When the burners are shut off, all of the air could not be shut off, most of the burners having a secondary supply of air to prevent the end of the burner from being burnt. This excess air could not be shut off.

4th. The secondary air principle is wrong, and tests of the mixing feature of the burners themselves by the use of smoke and bridge wall temperature investigations, showed that the air through the center of the burner was really a cold core and the stream lines were not broken up.

5th. The initial cost of the commercial types seemed prohibitive and the cost of renewals high.

In the new design, an endeavor was made to overcome all of the above objections, and up-to-date the results have shown that the new design is a success. The most valuable feature of the new burner is the absolute control of the quantities of gas and air. Another of almost equal importance is the thoroughness of mixing before entering the furnace, without allowing the burner to flare back. Fig. 8 shows that both the air and gas are absolutely under the operator's control, and further, that although the gas and air are kept separate up to within a few inches of the furnace, a mixture with a very fine sub-division is made, the gas and air being separated only by the walls of the small pipe.

No attempt has been made to make the gas and air control entirely automatic. It was felt that neither the air nor the gas should be controlled independently by an automatic device. It has been found that the amount of time required for gas and air adjustments is small, and it is believed that the advantage of the simplicity is more than enough to off-set the costs of hand operation.

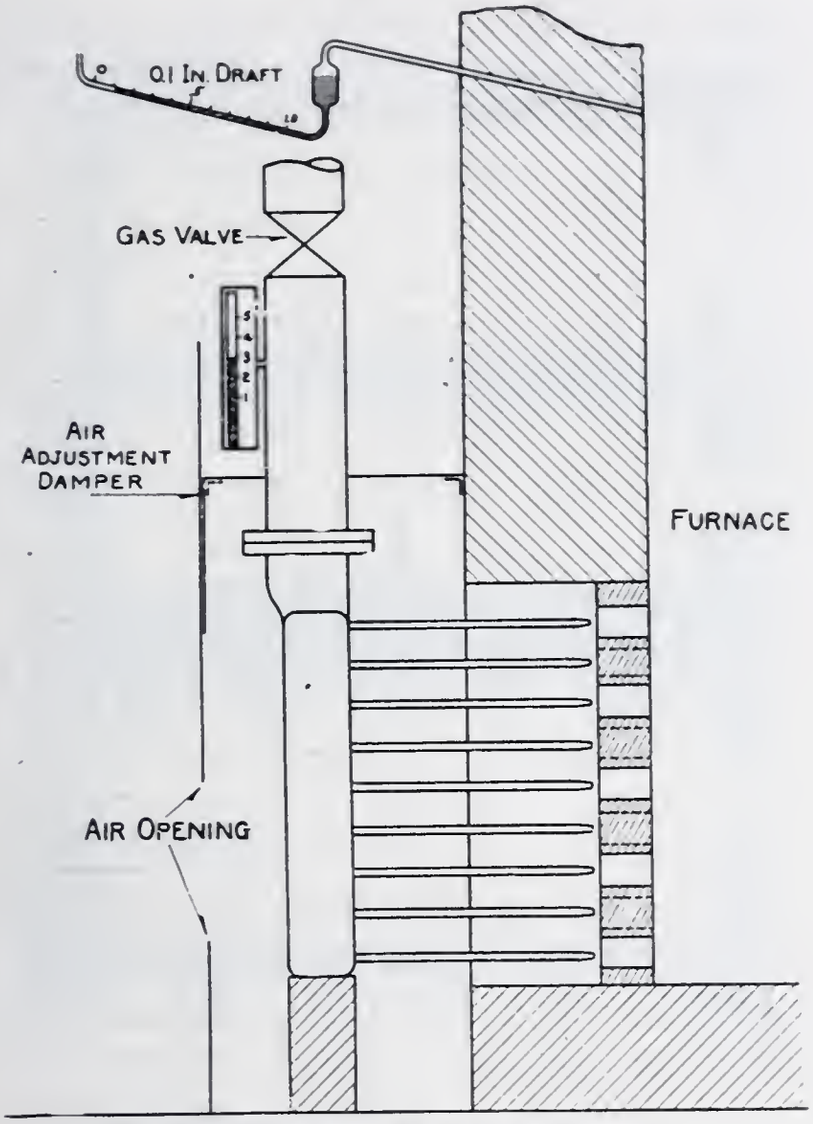

Arrangement of Gas Burner

Fig. 8.

The proper adjustments to determine the correct ratio between the quantities of gas and air are determined by the use of a single "U" tube. This, as you will notice in Fig. 8, is connected direct to the gas chamber between the control valve and the mixing nozzles. A schedule of the correct position of the air damper has been determined by special and operating tests. For the sake of simplicity the damper is so marked for any gas pressure that the damper position is indicated by the same figure which represents the gas pressure. The quantity of air is determined by the position of the air damper because the drop in pressure between the boiler room and the furnace is maintained constant at one-tenth of an inch of water. This figure was decided upon as a compromise between a high draft loss through the burner with its disadvantage of causing an increased leakage loss through

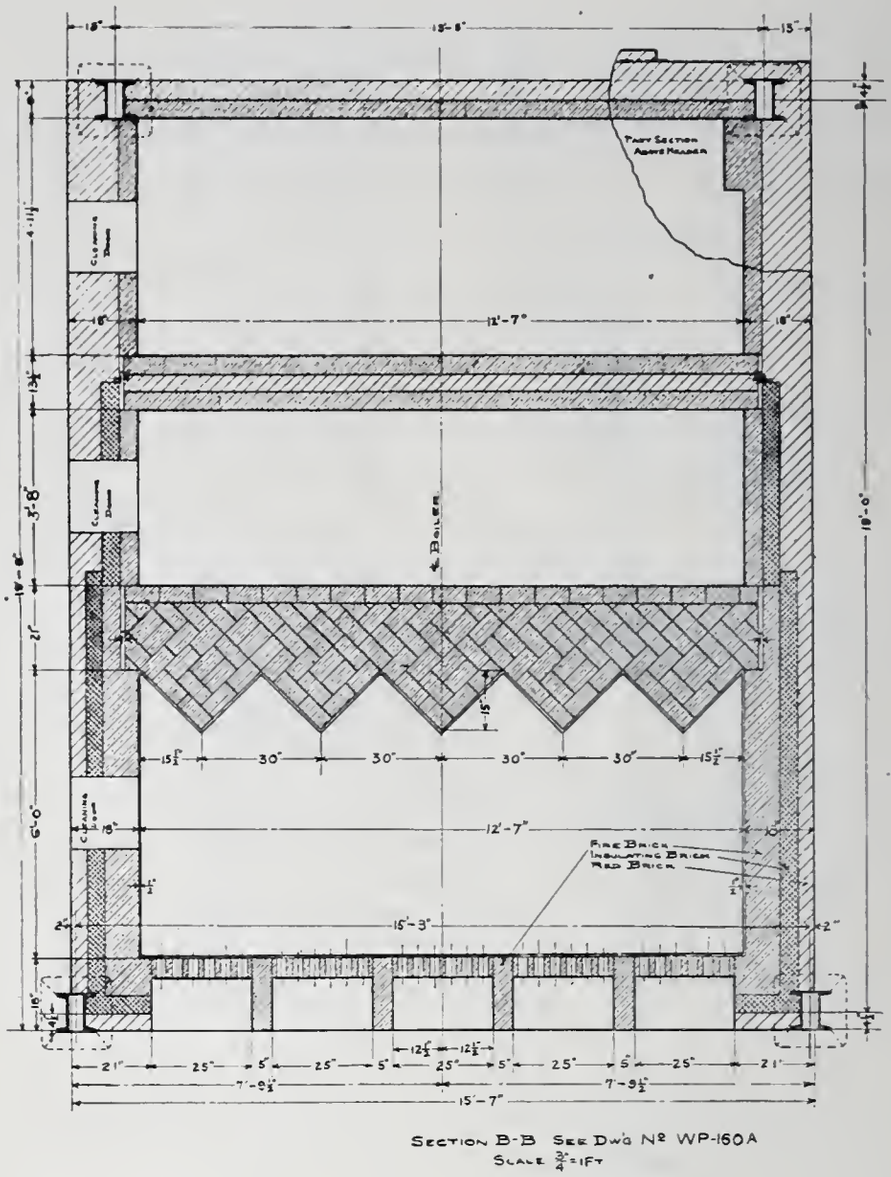

Fig. 9.

the setting, and a very low draft loss, a slight change of which would cause a large percentage of change in the quantity of air.

The brick-work is all very simple, the side walls being plain, but containing insulating brick between the fire-brick and the red brick. No checker work is used. With the vertical baffles the bridge wall which was pushed back to give more combustion space, was reinforced by a series of V-shaped pilasters, Fig. 9. This feature was designed as much to increase the strength of the bridge wall as it was to give more contact surface with the flame and assist in mixing the gases. With the horizontal baffling, a medium height bridge wall, with a slightly raised pillar in front of each burner is all that is used. This is shown in Figs. 6 and 6a. Of course the roof formed by the "C" and "T" tile is of great assistance to combustion. Much has been

written regarding the volume of combustion chamber required for different capacities. Figures have been given showing that it requires a certain number of cubic feet of space per horse-power in order to complete combustion, but it would seem that with gas as a fuel, these figures are all too high; in fact, it is doubtful whether the question of volume is a very important factor. We know that the two controlling factors of combustion are temperature and mixture. The temperatures are always sufficiently high if all the combustion is completed, as it should be, before the gases come in contact with the cold tubes. Mixture, then, is the factor which must be given the most consideration. To use an extreme as an illustration:—if a gas pipe of, say, two or three inches in diameter were opened directly into the furnace, it is very likely that the flame would extend almost entirely through the different passes of the setting, because the mixing is very poor. If, on the other hand, we might imagine the whole front of the furnace as being composed of Bunsen burners then it is very likely that the combustion would be entirely completed within a few inches and certainly within two or three feet of the front of the furnace where the burners are installed. These, of course, are extremes, but they illustrate the principle. The burner we have adopted is in reality a multiple Bunsen burner. As shown in Figs. 8, 10 and 11, each burner consists of forty-eight 7/16 in. nozzles delivering gas from the manifold to the 2½ in. air openings.

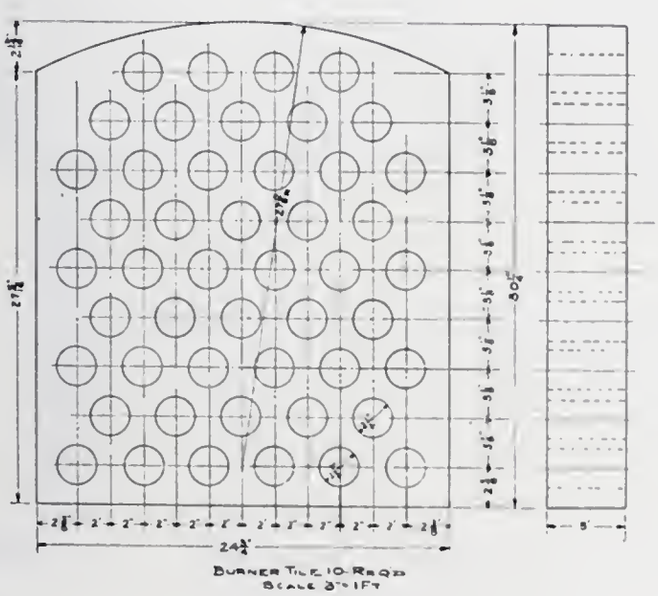

Fig. 10.

Economic Performance: The plant under discussion is not very old, but the regular operating performance has proved that there is at least some merit in the installation. Contrary to your expectations, no extended series of tests will be published at this time; however, a statement is included which shows the average monthly efficiencies obtained in actual operation from October, 1916, to and including April, 1917. This data is in one sense the result of a continuous test. A statement is made up every eight hours by the operator for the same period, showing the essential facts for that period. Every pound of water to the boilers is weighed, every pound of water blown or allowed to leak out of the boilers through the blow-down, is weighed and deducted, and every cubic foot of gas metered. Even the radiation in the pipe lines within the plant is charged to the boilers and every pound of this is deducted from the output.

Months	Average Efficiency
October, 1916	78.9
November	77.2
December	78.4
January, 1917	85.2
February	83.5
March	78.0
April	78.2

Flue gas analyses are not made continuously or even periodically, because with the positive burner arrangement it does not seem necessary. During the tests to determine the best burner arrangement, the gas analysis representing good adjustment was about as follows:

CO_2	11.4%
CO	0.0%
O_2	.9%
N	87.7%

It was found that when an attempt was made to still further reduce the air, CO began to form. Since the efficiency is

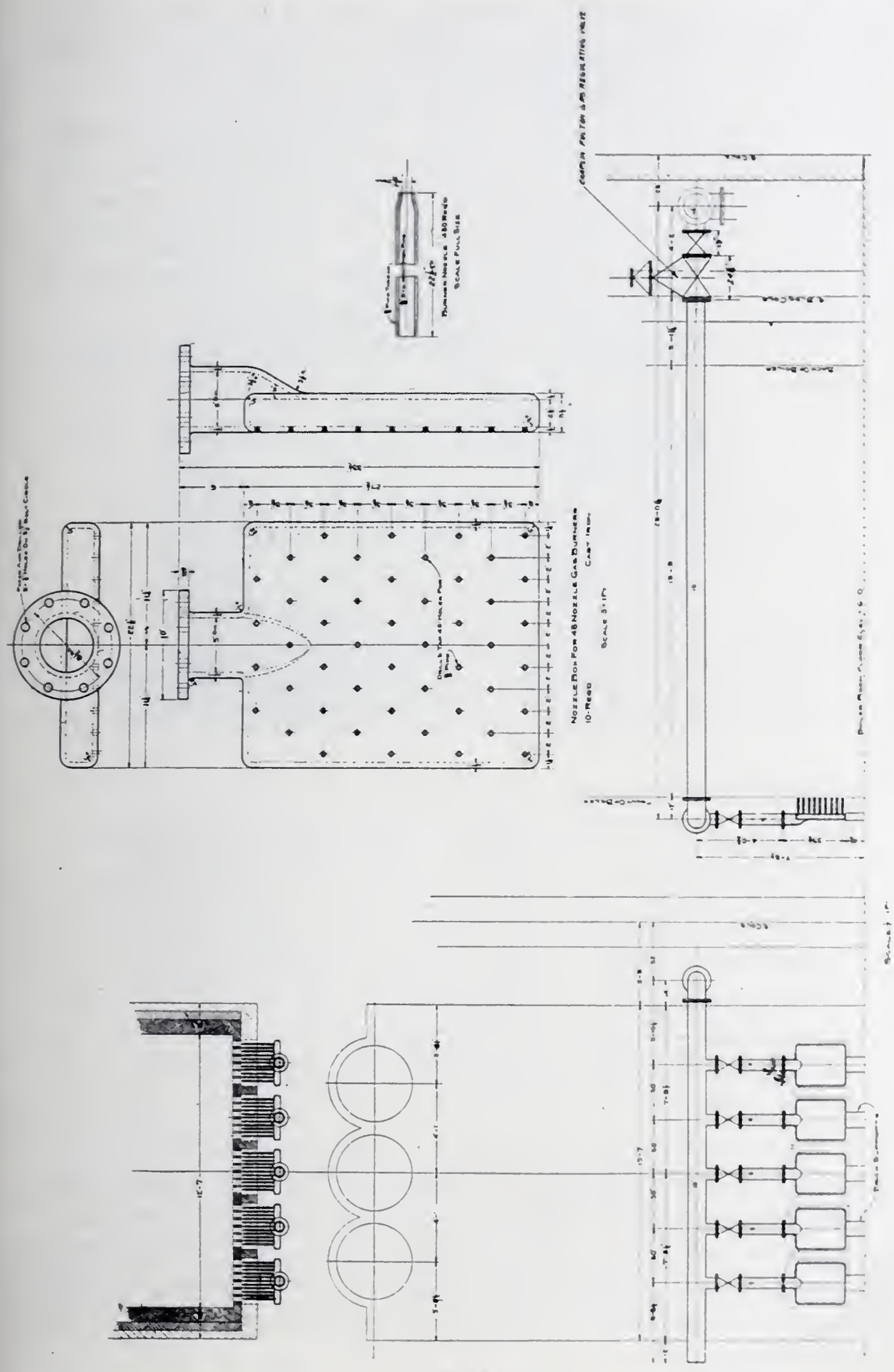

Fig. 11.

only slightly affected by an increase in the CO_2 even from as low as 10 percent if the stack temperatures are kept low, no attempt was made to eliminate the small percent (approximately 5) of excess air which was still present. The chances of decreasing the efficiency by incomplete combustion are probably greater than those of increasing the efficiency by decreasing the amount of excess air below that minimum. Fig. 11 indicates better than I can otherwise describe, the inter-relations between air excess, percentage of CO_2; stack temperature, and efficiency.

An average analysis of Pittsburgh natural gas is about as follows:

Methane (CH_4)	79.54
Ethene (C_2H_6)	19.56
CO_2	0.15
Nitrogen (N)	0.75
B. T. U. (low value)	1070

The reactions for *perfect combustion* are:

$$.7954\ CH_4 + 1.5908\ \text{“}O_2\text{”} = 0.7954\ \text{“}CO_2\text{”} + 1.5908\ H_2O$$
$$.1956\ C_2H_6 + .6846\ \text{“}O_2\text{”} = .3912\ \text{“}CO_2\text{”} + .5868\ H_2O$$

Which gives for products of combustion:

$1.5908 + .5868 = 2.1776$ cu. ft. H_2O Vapor.

$.0015 + .7954 + .3912 = 1.1881$ cubic ft. CO_2 Gas.

Nitrogen with oxygen (air 20.9%; O_2 — 79.1; N_2)

$(1.5918 + .6846) - 79.1 \div 20.9 = 8.6001$ cu. ft.

Adding initial N_2 — .0075 cu. ft. $= 8.6076$ cu. ft.

Maximum theoretical CO_2% dry gas by Orsat.

$100\ (1.1881 \div 1.188 + 8.607) = 12.135\%$.

During the months of October to April, inclusive, the average monthly efficiencies you noted were never lower than 77 percent, and sometimes as high as 85 percent. The lower efficiencies are due to radiation at light loads. Also remember that these figures do not represent a few hours or even a day, but are the averages covering whole months.

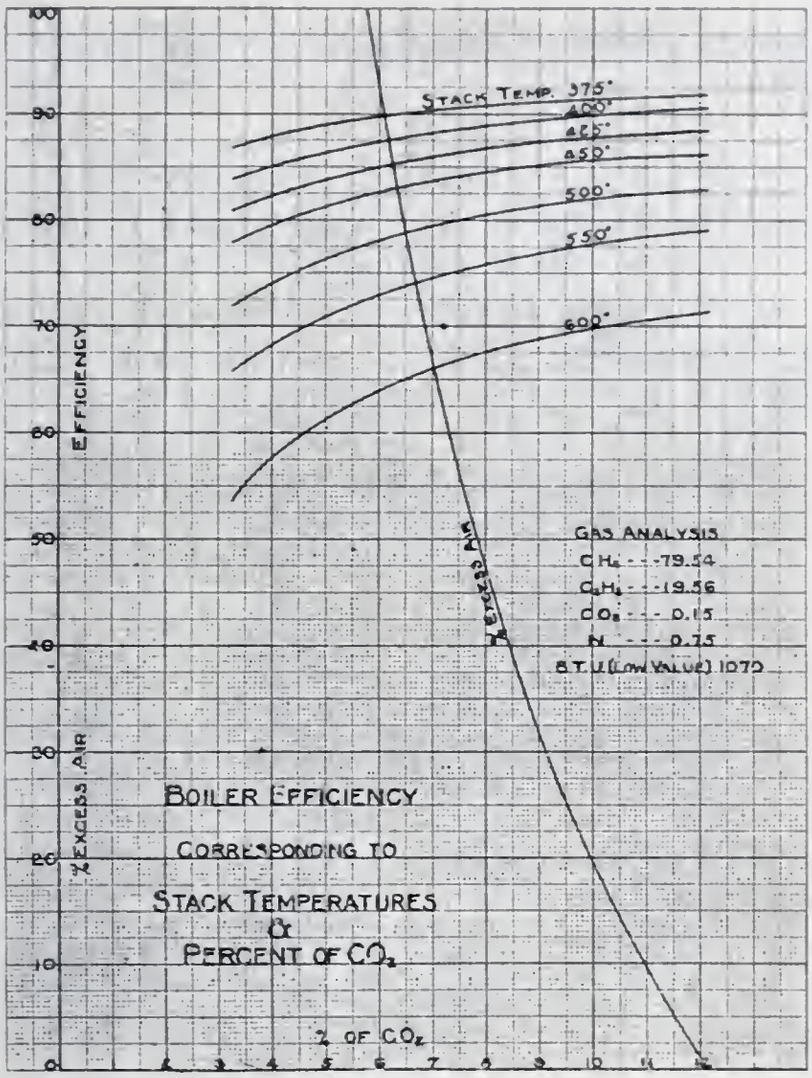

Fig. 12.

The efficiency results are not what a corps of expert engineers and chemists can do when watching every adjustment, but what has actually been accomplished by the regular operators while attending to and taking an interest in all their other duties.

Every cubic foot of gas entering the plant has been charged against the boilers. No credit whatever has been allowed for firing up cold boilers or for the heat carried away in the blowdown water. The plant has been considered as the unit rather than the boiler.

The figures you have seen represent the performances during the construction period, when the only instruments available for use were a couple of draft gauges and about a half dozen improvised U tubes. The complete installation of instruments should further improve conditions.

Conclusions: Briefly summing up, the success of the installation is due to:

1. The cutting out of the loss of draft through the damper and substituting the resistance of a longer path through the boilers, obtaining better heat absorption.
2. The design of a durable burner which will give correct mixture under all conditions.
3. The maintenance of the proper interest of the operators.

MONTHLY EFFICIENCY RECORD AT THE WILLIAM PENN BOILER ROOM

Month	Boiler Feed Pounds	Drain and Blow-Down Pounds	Net Steam Generated Pounds	Fuel Gas Cubic Feet	Efficiency Evaporation Lbs. per cu. ft. F.&A. 212°	Efficiency Per Cent.
October	6 257 000	29 000	6 228 000	7 977 000	.87	78.9
November	10 171 000	33 000	10 138 000	13 251 000	.852	77.2
December	16 660 000	43 000	10 617 000	21 867 000	.865	78.4
January, 1917	24 240 000	816 000	23 424 000	28 728 000	.94	85.2
February	23 803 000	763 000	23 040 000	28 917 000	.921	83.5
March	19 675 000	1 922 000	17 753 000	23 460 000	.861	78.0
April	15 257 000	776 000	14 481 000	18 563 000	.863	78.2

DISCUSSION

PRES. ALEX. L. HOERR:* To those of us who have to do with the ordinary coal and blast furnace gas fired boilers in steel plants, the figures given by Mr. Hobbs are certainly wonderfully attractive. In our business when we manage to secure 70 percent efficiency over the month, most of us feel that we have accomplished almost the impossible. Of course, we would not have available the very ideal fuel with which the plant under discussion has had to deal. Nevertheless, I feel that the results obtained are most remarkable and very creditable to the designers and operators.

*Chief Engineer, National Tube Co., McKeesport, Pa.

Dr. Thomas Turnbull, Jr.:† I was very much interested in Mr. Hobbs' paper, especially in the marked efficiency obtained. I am sorry he did not explain with what boiler capacity he was running when he secured the high efficiencies, as they are much higher than those ordinarily obtained; 72 to 75 percent are the usual good results of a gas fired installation. The lowest month was 77.2 percent and the highest was during the two coldest months, January and February, when he was probably running at high capacity. The burner installation is very interesting. The gas divisions or the mixture divisions are very small, that is, the number of entering inlets is greatly increased. The usual practice is about one burner for every 30 h.p. A 600 h.p. boiler would mean about 20 burners, and in this burner there are five times 48 burners, or 240 for each 600 h.p. He has a mixture at such a velocity that he obtains what is practically surface combustion. That is, if his velocity were greater than his rate of flame propagation, he would get a blowing off; if less he would get a flare back; but if his velocity were equal to his rate of flame propagation, he would get practically a surface combustion.

He also obtained a high velocity of his gases and that probably with the long course through the setting, gave him greater efficiency than with low velocities. It has been found that with high velocities of gases you get better heat obsorption than with low velocities. Of course, he takes in all his air through the openings and has no secondary air such as you usually get in an ordinary Bunsen burner.

Another thing is the simplicity of the equipment with which he took his records.

Mr. E. D. Leland:* The excellent boiler efficiency obtained with the installation just described, is not at all surprising when one considers that natural gas was the fuel used. By providing suitable mixing arrangements and taking care to supply the necessary amount of air, good results are to be expected in burning gas.

"*Perfect combustion,*" is easy to obtain, but, "*high boiler efficiency*" is quite a different matter and is dependent, not only

†Director, Tate, Jones & Co., Leetsdale, Pa.
*Superintendent, Compressing Stations, Philadelphia Co., Pittsburgh.

upon good combustion, but also upon proper heat insulation, small amount of excess air, tight settings, and suitable baffling arrangements, in order to insure the hot gases giving up their heat to the water in the boiler.

Mr. Hobbs is correct in stating that each boiler installation presents its own problem, and although the general principle of the front burner design he adopted was developed in the Indiana gas fields over twenty years ago, many of the details are new and were worked out to suit this particular plant and to meet the special conditions existing there.

The boiler efficiencies of 77 percent to 85 percent obtained by Mr. Hobbs, show how successfully the problem was solved.

In many of our boilers in West Virginia where the conditions are similar to those in the William Penn Plant, we use front burners of the same general type, in combination with horizontal baffling, and obtain very fair efficiency.

I also recall a test of boilers in Pennsylvania where a different type of gas burner was used and an efficiency of 82.24 percent was obtained. The gas pressure at the burner was eight ounces and under this condition the burner worked very nicely, but in the William Penn plant where the gas pressure is much lower, one has to consider the danger of the gas back-firing and burning-up the burner. Because of this danger the front burner plate, which makes a flare back impossible, is the most suitable arrangement.

There has been an impression that one could not burn natural gas and at the same time get high boiler efficiency. This mistaken idea was possibly due to various tests under poor conditions where low efficiencies were shown. For example in a paper presented before the American Society of Mechanical Engineers in 1905, a test of a 250 h.p. Cook boiler was given where an efficiency of only 72.7 percent was obtained. The author of the paper drew certain conclusions from the test. He said, "The test here given shows that it is not possible to get better efficiency with gas than with coal," and again "The best coal efficiencies cannot be obtained with gas." He explained this remarkable conclusion as follows: "That is due to the large volume of air for dilution which must be supplied with gas burners."

In the test he presented he was certainly living up to his idea about "air for dilution," for the flue gas analysis showed about 60 percent excess air, whereas an excess of 5 percent or 6 percent is ample for all purposes in burning natural gas. At the same time another boiler test was presented in which an air excess of 232 percent was shown.

These records would indicate slight familiarity with the approved methods of burning gas. The results obtained by Mr. Hobbs were very good, but are not remarkable, as with suitable burner installation, we have reason to expect these high efficiencies with either gas or oil for fuel. The following in *"Power"* of May 8, 1917, is of interest in this connection:

> "In the last three years several comparative boiler tests under regular service have been conducted at plants in New England to make a comparison between coal and fuel oil; the test covered a period of one week each, starting with cold boilers Monday morning and continuing until Saturday, when the plants were shut down. Hammel oil-burning equipment was used throughout each plant."

COMPARATIVE RESULTS COAL AND OIL FUELS

	Manville Mill	Jenckes Spinning Co.	Bernon Mill	Riverside Mill
Evaporation per pound of coal from and at 212° F.	10.31	10.02	10.24	9.71
Evaporation per pound of oil from and at 212° F.	15.55	15.21	15.38	15.56
Combined efficiency with coal, per cent.	68.0	66.6	68.1	67.2
Combined efficiency with oil, per cent.	80.8	81.5	80.6	81.5

These results would indicate that boiler efficiencies of around 80 percent are not unusual when gas or oil is used as fuel.

Mr. L. C. Frohrieb:† Mr. Hobbs' paper points out very clearly that the proper selection and installation of the equipment to be installed in any power or heating plant is a problem governed by that particular plant and not entirely by precedent. The Engineering Profession would not advance if it did not

†Secretary, Federal Engineering Co., Pittsburgh, Pa.

carefully consider the experience gained by others who had had similar problems to work out before them and who had successfully handled such problems.

By "consider," I do not mean that what was done previously should be followed as closely as possible in the next installation, but that similar installations should be used as an index, carefully weighing and judging each component part and then by following what is good, omit the unsuccessful; add what was omitted; and improve on the faulty. We come nearer to having a successful installation by this method than by any other and leave to our successors another stepping stone towards perfection; barring, of course, complete revolutionary methods which, in the Engineering Profession, are few and far between. Most of the progress which has been made has been evolutionary rather than revolutionary, with the general trend toward increasing economy, safety and reliability.

An increase in economy cannot be measured by the fuel consumption alone, as in most installations reliability is of far more importance than fuel costs, and safety for the operators and other persons whose work brings them within the possible danger zone is the first problem to be considered in power plant design. We all know that light, heat and power are absolutely necessary for the economical provision of food, clothing and shelter, which are the essential things necessary to sustain life in the human body and it matters not what we are doing, whether designing a blast furnace or planting a garden, the majority of those employed are either directly or indirectly producing these essentials to life, but in the mill, factory, shop, warehouse or farms, artificial light, heat and power are necessary evils and constitute only one of the many problems a producer has to meet and as a rule, he is less skilled in that department than in the art of producing whatever he may be engaged in. Also his power plant may not be sufficiently large to warrant the employment of an engineer skilled in his particular wants. In this case, an honest and capable manufacturer or his representative (and as a rule I have found him to be so), is his best friend, as a manufacturer would not knowingly sell any one equipment, if in his judgment, it were not suitable for the purpose intended. Then, too, the manu-

facturer, as a general rule, has a better opportunity of judging as, where the buyer has knowledge of one plant, the manufacturer has experience with hundreds. Of course, mistakes have been made by manufacturers in recommending and installing equipment which later proved either unsuccessful or unsuitable, but I venture to say that such installations are in all cases an expensive lesson to the manufacturer as well as to the purchaser, for in his efforts to make a successful installation, the manufacturer spends more than his contract price, over and above his margin of profit. But the money and experience are not wasted, for if the installation is finally made successful, another problem has been solved; or if unsuccessful, we are taught a lesson not to repeat the experience. We must also bear in mind that the other fellow's mistake in design or installation might have been ours, had he not made it first and we profited thereby. Let us, therefore, be a little more charitable with the manufacturer if he handles the word "efficiency," "economy," and "reliability" a little too freely in order to convince you that his particular product is what you need for your installation, for in spite of his seemingly over enthusiastic claims, they are, as a rule, based upon past performance of similar installations. Neither must we be too severe upon the engineer who is responsible for the installation of equipment that has not proved entirely satisfactory, for he may have been influenced by similar successful installations, but on account of local conditions or operation, the results obtained were not the same.

Mr. Hobbs as Assistant to Superintendent of Power Stations had the great advantage over other engineers, in the design and installation of this plant, in that there was available for his assistance, the brains and energy that an organization like the Duquesne Light Co. and its kindred corporations have available, in addition to the experience, both good and bad, which such an organization gains daily in its many diversified interests.

The results obtained are interesting but not sufficient data is given for careful analysis or comparison and inasmuch as this is a large heating plant and data on this type of installation is so limited, it would be of great benefit to engineers in general and the members of the Society in particular, if we were given more

details, as a mere statement of percentages is without value unless the facts that go to make up these results are available. In the plant in question where such careful consideration was given to obtain economy and every method used to conserve the heat, such data would be even more valuable.

Referring to the baffling in his boilers, Mr. Hobbs correctly stated that the type of baffle and the area between them is governed entirely by the draft available and the fuel to be used. Some years ago I equipped a water tube boiler with a four-pass horizontal baffle; the lower row was encircling tile or C-shape and when using gas for fuel with a load not exceeding the rated load of the boiler, the installation operated very successfully, barring the burnt tubes due to part of the encircling tile breaking off, although no tests were made.

When changing over to coal for fuel, however, the setting was changed to a two-pass with the lower row of baffles on the fourth row of tubes. This change was necessitated on account of the fact that the stack was both too small and too short to furnish sufficient draft for coal burning, although it was ample for gas.

The horizontal baffle is preferable when using gas for fuel, as it is more easily made and kept gas tight, thereby preventing short circuiting of the flue gases. The objection to vertical baffle is largely overcome in coal-fired boilers as the soot has a tendency to stop the leaks in baffling. While a great deal has been said regarding the undesirability of horizontal baffle for coal-fired boilers, I have found that with proper care and proper apparatus, it is as easy to keep a horizontally-baffled boiler clean as it is a vertical one; and unless a boiler has proper and constant attention, its efficiency and capacity fall off, regardless of the baffling.

I made a test of a 260 h.p. water-tube boiler, using natural gas for fuel, in which an efficiency of 80 percent was obtained. This was a three-pass horizontally baffled boiler with C tile on the lower row. You will note that there was no measurable draft loss through the entire setting, which was due to the fact that the setting was designed for coal. Read test:

Date of test	June 2/08.
Duration of test	6 hous
Heating surface	2528 sq. ft.
Grate surface	59 sq. ft.
Ratio H.S. to G.S	43 - 1
Steam pressure	93.3 Lbs.
Draft in stack	.4" water
Draft in uptake	.4" water
Draft in first pass	.4" water
Draft in second pass	.4" water
Draft in third pass	.4" water
Barometer	29.2" mercury
Boiler room temperature	76 deg.
Outside air temperature	73 deg.
Flue temperature	331 deg.
Feed water as weighed	60 deg.
Feed water after leaving heater and entering boiler	201 deg.
Total gas used	38975 cu. ft.
Total water evaporated	31835 Lbs.
Total equivalent water evaporated	33427 Lbs.
Gas used per hour	6496.00 cu. ft.
Water evaporated per hour	5306 Lbs.
Equivalent water evaporated per hour	5571 Lbs.
Water evaporated per 1000′ gas 1050 B.T.U	816 Lbs.
Equivalent water evaporated per 1000′ gas	857 Lbs.
Equivalent water evaporated per sq. ft. heating surface	212 Lbs.
H.P. rated	260
H.P. developed	162
Horsepower developed of rated horsepower	62%
Factor of evaporation	1.05
Efficiency of boiler and burner	80%

Remarks:

Dampers on burners partly closed.

Mr. H. C. Siebert:* I have not had time to prepare any discussion. I was very much interested in the efficiency figures quoted by Mr. Hobbs, and while I do not think they are phenomenal, I am inclined to the same view as Mr. Hobbs and the other gentlemen, that with proper burners, settings and baffling, such efficiencies could be expected from a gaseous fuel. We have made some experiments in connection with natural gas burners and probably have gone somewhat into the same experiments as Mr. Hobbs has in the way of mixture velocity and temperature.

*Steam Engineer, Worth Bros. Co., Coatesville, Pa.

I would be interested to hear what temperatures were observed by Mr. Hobbs in the furnace, if they were measured, and on what capacity those efficiencies were obtained.

MR. A. G. DAVIS:† In connection with this excellent paper presented by Mr. Hobbs, a simple method of calculating the volume of flue gas which will be given off in the combustion of a unit volume of natural gas, has occurred to me.

The only data necessary for this calculation is an analysis of the natural gas to be used and a knowledge of the volume required.

To illustrate, let us take natural gas of the following analysis, which is about the average for Pittsburgh:

Methane CH_4	79.5%
Ethane C_2H_6	19.5%
Nitrogen N_2	1.0%

The oxygen required to burn Methane and Ethane is as follows:

$$CH_4 + 2\ O_2 = CO_2 + 2\ H_2O$$
$$C_2H_6 + 3.5\ O_2 = 2\ CO_2 + 3\ H_2O$$

Then $0.795\ CH_4 + 1.59\ O_2 = 0.795\ CO_2 + 1.59\ H_2O$
And $0.195\ C_2H_6 + 0.6825\ O_2 = 0.390\ CO_2 + 0.585\ H_2O$

or a total Oxygen requirement of 2.2725 volumes = 10.873 volumes air.

One volume of gas burned with 10.873 volumes of air gives the following equation:

$$0.795\ CH_4 + 0.195\ C_2H_6 + 0.01\ N_2 + 2.2725\ O_2 + 8.6005\ N_2 = 1.185\ CO_2 + 2.175\ H_2O + 8.6105\ N_2$$

or a total of 11.97 volumes of flue gas with the water vapor uncondensed for each volume of natural gas of the above com-

†Chemist, Philadelphia Company, Pittsburgh.

position burned with exactly the theoretical amount of air necessary for combustion. This condition is, of course, ideal and impossible of accomplishment under present practice.

Suppose we now consider a case where 10 percent excess air is present or where 1 volume of gas is burned with 11.96 (10.873×1.1) vols. air

$$\text{Then } 0.795\ CH_4 + 0.195\ C_2H_6 + 0.01\ N_2 + 2.5\ O_2 + 9.46\ N_2 = 1.185\ CO_2 + 2.175\ H_2O + 0.2275\ O_2 + 9.47\ N_2$$

or a total of 13.06 volumes of uncondensed flue gas.

It is needless to illustrate further but I have prepared a table showing the flue gas volumes obtained by burning a gas of the above composition with varying volumes of air and comparing these volumes with those produced by burning a gas of the composition 99.0 percent Methane and 1 percent Nitrogen. Designating Pittsburgh Natural as "A" and the gas containing 99.0 percent Methane as "B" there is formed for each volume of gas burned flue gas volumes as follows:

	Theor. Air.	10% Ex. Air.	50% Ex. Air.	100% Ex. Air.
"A"	11.97	13.06	17.4	22.8
"B"	10.47	11.4	15.2	19.9

These volumes are at standard conditions and would have to be corrected to the temperature of the firebox or stack.

It is also possible to calculate the composition of the products of combustion that can be expected from a mixture of 1 volume of natural gas with any number of volumes of air. The perfect flue gas formed by the combustion of Pittsburgh natural gas of the above composition

$$(79.5\%\ CH_4,\ 19.5\%\ C_2H_6,\ 1.0\%\ N_2)$$

burned with the exact amount of air necessary for combustion is:

CO_2	12.1%
N_2	87.9%

Take the case where 10 percent excess air is present and referring back to the equation for that case we find that the total flue gas with the water vapor condensed out is 10.8825 volumes, the CO_2 is 1.185 volumes, the O_2 is 0.2275 volumes and the N_2 is 9.47 volumes

$$\text{Then} \quad \%CO_2 = (1.185 \div 10.8825) \times 100\% = 10.9\%$$
$$\% \; O_2 = (0.2275 \div 10.8825) \times 100\% = 2.1\%$$
$$\% \; N_2 = (9.47 \div 10.8825) \times 100\% = 87.0\%$$

The following table is a comparison of the flue gases of varying mixtures obtained from the combustion of the two Natural Gases "A" (79.5% CH_4, 19.5% C_2H_6, 1.0% N_2) and "B" (99.0% CH_4, 1.0% N_2):

	Theor. Air.		10% Ex. Air.		50% Ex. Air.		100% Ex.Air.	
	"A"	"B"	"A"	"B"	"A"	"B"	"A"	"B"
CO_2	12.1	11.7	10.9	10.5	7.8	7.5	5.7	5.5
O_2	0.0	0.0	2.1	2.1	7.4	7.5	11.0	11.0
N_2	87.9	88.3	87.0	87.4	884.8	85.0	83.3	83.5

In regard to excess air, we have made some tests in West Virginia with a type of burner similar to that used by Mr. Hobbs,

The gas was controlled by the steam pressure and the air controlled by means of a stack damper and shutters which fitted around the nipples of the gas burner and could be adjusted to suit conditions. With this arrangement we found it quite easy to operate with an excess air content of 10 percent or less. With this condition the flame in the fire box was a soft, yellow one which filled the fire box and rolled slowly back almost to the rear wall of the furnace while with 100 percent excess air the flame was a sharp blue one extending but a foot or two from the end of the burner.

Dropping below 10 percent excess air it was noticed that "CO" was often formed while unconsumed oxygen was still present although with careful attention it probably would be possible to run the excess air content down to 5 percent.

The formula used for calculating the excess air present in a flue gas from an analysis of the flue gas is that proposed by Mr. Brown, Chemist, Carnegie Steel Co., Duquesne, and published some years ago in the Chemical Engineer and is as follows:

Percent Excess Air $= 3.78\ O_2 \div (N_2 - 3.78\ O_2) \times 100\%$

3.78 being the relation between Oxygen and Nitrogen in air then $3.78\ O_2$ represents Nitrogen in air in excess of that necessary for comb. and N_2 represents total Nitrogen in necessary air plus nitrogen in Ex. Air. and $(N_2 - 3.78\ O_2)$ represents nitrogen of necessary air.

Where CO [carbon monoxide] is found occuring in the flue gas the formula becomes

$$\%\ \text{Excess Air} = \frac{1.89\ (2\ O_2 - CO)}{N_2 - 1.89\ (2\ O_2 - CO)} \times 100\%$$

$$\text{In both cases}\ \%\ \text{Excess Air} = \frac{\text{Excess Air}}{\text{Necessary Air}} \times 100\%$$

Author's Closure: Dr. Turnbull inquired about the percentage of rated capacity at which the boilers were being operated. You are again referred to Fig. 1, which indicates that the steam demand for this kind of service is quite variable, and in this case the rated capacity has varied from 25 per cent up to 175 percent. The burners were designed for 200 percent of rating, but with the short duration of the peak, it is better to sacrifice economy in favor of capacity. If the peaks had a longer period of duration, then it would not be advisable to go to as high a boiler rating.

Dr. Turnbull also mentioned another point on which, perhaps, I have not elaborated enough, and that is the question of gas velocities in the tubes. He gives the high velocity part if not all of the credit for the higher efficiency, and that is correct. I believe that the elements *time in contact* or *length of gas travel* are also very important. An analysis of the various factors which control the transmission of heat, indicates that the rate of heat transmission varies with the gas velocity through the tubes, but

experiments have proved that the rate does not vary in direct proportion. If the velocity is doubled the rate of heat transmission is not nearly doubled; whereas the amount of heat absorbed by the boiler does vary directly in proportion to the time element. If gases at a constant temperature are kept in contact with tubes at some other lower constant temperature, the amount of heat transmitted depends directly upon the time element. With a constant velocity, an increase in the length of gas travel would then result in an increased heat absorption. It so happens, however, that any arrangement to increase the length of gas travel usually results in an increased velocity, so that the time element is not increased after all by a change in the baffles.

There is one exception to the rule that an increase in velocity will increase the heat transmission, and that is in the case where the increase in velocity is due to an increase in the amount of excess air, in which case the volume of the products of combustion is greatly increased, and the velocity is increased; but since the amount of heat transmitted to the boilers is decreased in inverse proportion to the time in contact, and is increased at a rate less than in direct proportion to the velocity, the result is that less heat is absorbed. This is particularly noticeable at the lower percentages of excess air. With furnace conditions remaining the same, except that of excess air, the stack temperature will rise at first when excess air is admitted; but after a certain point is reached, the stack temperature will drop again due to the absorption of heat by the excess air instead of by the boiler.

Following this line of thought still further, I wish to point out that the particular baffle arrangement adopted was only possible due to the very low excess air required with the particular type of burners, and the lower weight and smaller quantities of gases of combustion per unit of boiler capacity. Too much emphasis cannot be placed upon the subject of air control. The ideal furnace is one which would always operate successfully with the same proportion of air and gas, irrespective of the rating being developed, and that is one of the features which seems to have been obtained in this installation. When the burner is not required, the air for that burner is entirely shut off. There is

no secondary air, and practically no leakage at all around the air dampers.

A tall chimney is one of the greatest sources of danger as far as economy is concerned in the burning of natural gas. With a tall chimney, the available draft is usually so great that the operators allow excess air to be taken into the furnace. A forty or fifty-foot stack would be sufficient for use in connection with the standard types of baffling. In this installation, you will recall, that a height of three hundred and fifty feet was required in order to discharge the gases above the roof; and it was to eliminate the danger of loss due to excess air, as well as to increase the efficiency by increasing the heat transmission, that the special baffle arrangement was devised.

Mr. Siebert has asked about the temperatures. They were, under best conditions, approximately 2700 or 2800. Of course, a considerable reduction in temperature is caused by direct radiation.

I am glad Mr. Davis has supplemented my paper with so much valuable information. His discussion containing chemical equations supplies information which the paper itself lacks. I had intended to go into the mathematical calculations to a certain extent, but now I am glad that I did not, as Mr. Davis has gone into the matter in a much more thorough manner than I could have done. I also intended to give you a copy of the original calculations showing the way the air and gas openings in the burner were proportioned, but I think it will be more to the point to simply tell you that the air openings were designed to give the maximum quantity of air required with the drop in pressure, of only 1/10 in. The gas openings were originally designed for something over three ounces gas pressure, but later were enlarged so as to deliver sufficient gas at lower gas pressures. From tests, we have found that the burners' performance coincide very closely with that for which they were designed.

Mr. Frohrieb has been very kind in his remarks. I am sorry that I have not the detailed data which he desires in such shape that it can be presented. The cut showing the boiler performance contains some data, although, of course, it does not go into the detailed draft and temperature losses through the various passes,

nor gas analysis. As a matter of fact, the separate details have been given attention, particularly the burner and baffles. The only general correlated data is on the exact measurement of the fuel and output, which determines the efficiency.

Again may I call your attention to the fact that these efficiency figures were obtained under actual operating conditions by regular operating men. Of course, the boiler equipment and everything is new, but with gas as a fuel, this performance will no doubt be closely approached for many years.

In order to show you the details of this plant more clearly, an inspection trip has been arranged, so that we can go from here directly over to the plant, which is less than a block from here. Before we leave, however, I wish to express my appreciation for your patience and courtesy, and to thank you for the consideration you have given me.

HYDRATED LIME AND ITS QUALIFICATIONS AS A STRUCTURAL MATERIAL

By Bela Nagy*

Historical—When we consider the endless list of materials used in engineering and building construction, both as integral parts of the finished structures and as tools or auxiliaries, we can hardly expect engineers to be entirely familiar with all of them. With some of the less important materials, a more or less superficial knowledge is sufficient, but the more we know of the materials on which the strength and economy of the structures depend, the more intelligently can we use them, and the greater will be the benefits which may be derived from their use.

Some of these materials have been in daily use for centuries, and through long use we have developed familiarity of a certain kind, which we considered sufficient, as it served our purpose; but this familiarity was rather superficial and consisted of taking certain properties for granted. This feeling that we know all about them often prevented us from making an effort to discover new applications.

One of these ancient and seemingly well known materials is lime. To trace the oldest uses of lime is hardly possible. The oldest relics of engineering and architecture contain lime mortar and plaster of a quality which testify to an intimate knowledge of this material and, therefore, centuries of previous use. I need mention only the pyramids, whose blocks are bound together by lime mortar, and some of the ancient Greek and Roman plaster work which resisted the ravages of time better than the stone it covers.

The Greeks and Romans produced lime plaster and stucco of a quality which is far superior to our present day plaster. On reading the specifications in Vitrivius' Book on Architecture, we find a workmanship specified which in our age would make marble cheaper than plaster finished according to his requirements.

*Chief Engineer, Hydrated Lime Bureau, Pittsburgh, Pa.

We could follow the use of lime through the middle ages up to the present day, but we are principally interested in its practical aspect present-day uses and possibilities, and shall not dwell longer upon the past.

Technology and Chemistry—The first steps in the manufacture of hydrated lime are the same as in the manufacture of lump lime. The limestone is quarried and broken to sizes suitable for uniform burning. It is then fed into kilns and heated, or, as it is commonly called, burned. The temperature and duration of this process varies according to the chemical and physical characteristics of the stone, and ranges from 1400° to, at times, 2000° F. For simplicity's sake, let us consider a high calcium stone for an example. Limestone is calcium carbonate, having a chemical formula $Ca\ CO_3$ and may be considered as composed of calcium oxide ($Ca\ O$) and carbon dioxide (CO_2).

The purpose of burning is to disengage and expell the carbon dioxide and leave the calcium oxide, which is known as "quick lime."

By applying the atomic weights to the formula, we can readily see that from every 100 pounds of dry limestone which enters the kiln, we get 56 pounds of quick lime, while 44 pounds of carbon dioxide has been driven off.

Now if this 56 pounds of calcium oxide is brought into intimate contact with 18 pounds of water, 74 pounds of a new chemical substance is formed, known as dry slaked lime, or calcium hydrate, $Ca\ (OH)_2$. The addition of any more water will not change the chemical substance, but the physical consistency only. This is the substance which, mixed with other materials, forms the basis of mortar, plaster and stucco.

After the mortar is applied, its hardening takes place first, through drying, and further through the absorption of CO_2 from the air, converting the calcium hydrate into calcium carbonate, which is the chemical composition of limestone. In this process 74 parts of $Ca\ (OH)_2$ unite with 44 parts of CO_2, forming 100 parts of $Ca\ CO_3$ and liberating 18 parts of $H\ 2\ O$.

Thus it is seen that the chemistry of lime forms a complete cycle, which is clearly illustrated by Dr. Lazell's "Lime Cycle."

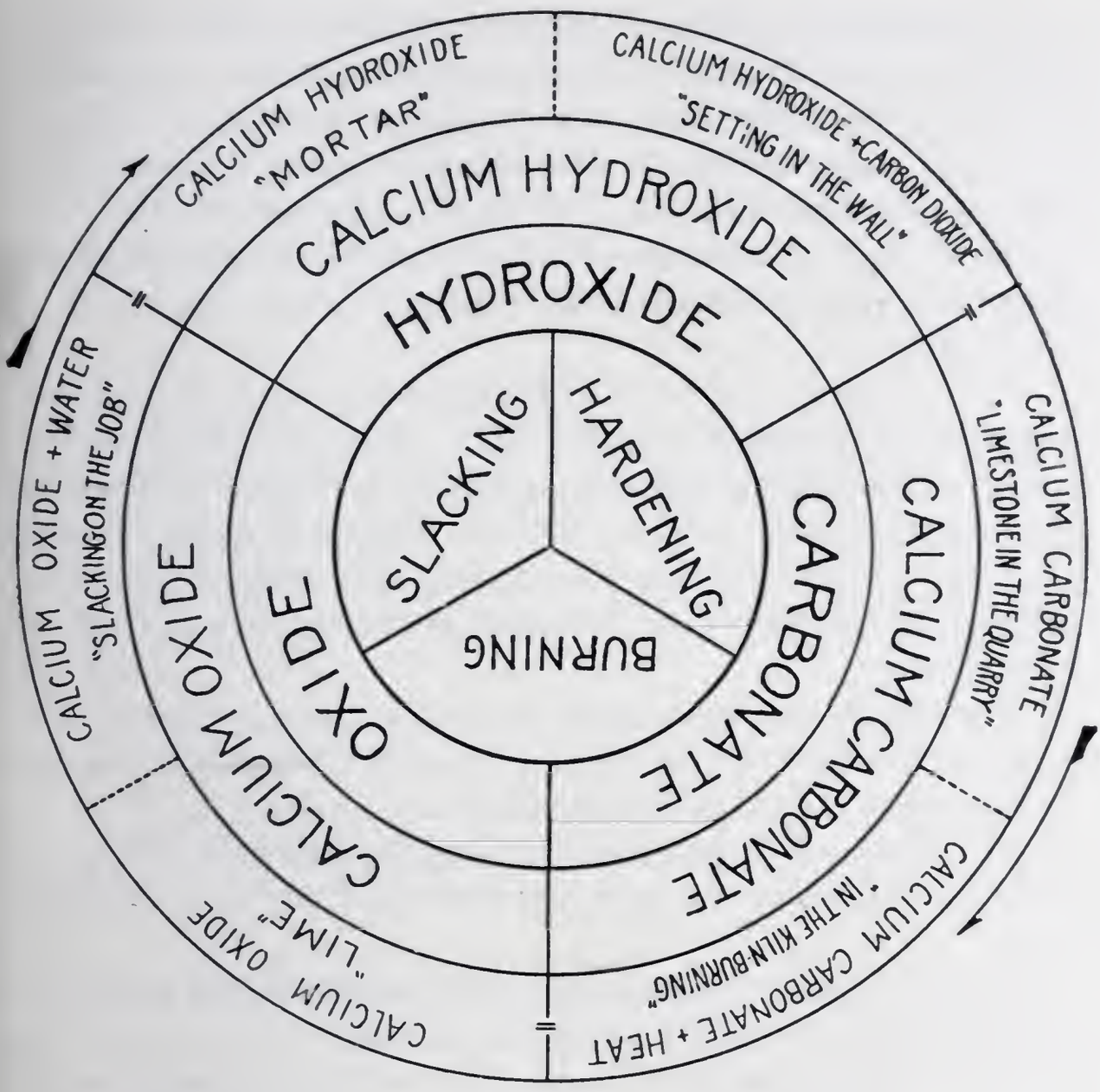

Fig. 1. Lime Cycle.

After centuries of use in the original form, namely, lump lime slaked on the work, there appeared on the market, a few years ago, lime in a new commercial form under various trade names and brands, but all embraced by the generic name of "hydrated lime."

We may safely say that this was the first radical innovation in the manufacture of lime since the pyramids were built. Today it is a well recognized material of construction, and as we have seen that it does not differ chemically from lime slaked on the work, we should know just what is the justification of its existence.

To define the product known as "hydrated lime" we may state that hydrated lime is a dry, flocculent powder produced by the slaking of quick lime under standardized factory conditions and expert supervision. In other words, it bears the same relation to lump lime slaked on the work, as lumber which is delivered in required dimensions, bears to the old practice of hewing the timber with the broadax and sawing it to the proper size at the building site.

The machines used for hydrating lime vary in design and operation; in principle they are either batch or continuous hydrators. While they differ in operating principle, they all accomplished the same results, bringing a weighed amount of quick lime into intimate contact with a measured amount of water, sufficient to complete the chemical reaction, but not enough to form a paste.

Having gained some understanding of what hydrated lime is, let us consider the justification of its existence and the advantages over the old style lump lime.

1. Hydrated lime leaves the factory completely slaked, all unslaked particles having been removed by screening or air separation.

2. It is ready for instant use upon delivery on the job eliminating the labor of slaking and time of aging.

3. It may be stored without danger of fire or deterioration and, therefore, without waste.

4. It comes in convenient packages of uniform size which makes handling easy and proportioning exact.

Hydrated lime has many applications in agriculture and industry, but since this paper deals with its structural applications, I shall speak of its use in mortar and concrete only.

Mortars may be divided into two main classes. To the first class belong mortars which unite the inert materials of which the structure is composed. The second includes mortars which serve as a covering.

The first class is represented by brick and masonry mortar and concrete; the second by plaster and stucco, though these latter at times, may be subject to structural considerations.

Plaster—The properties of old style lump lime plaster are well known. Hydrated lime eliminates all of the inconveniences of slaking, aging and screening on the work, and in addition produces plaster of greater strength than lump lime.

It will doubtless be of interest at this time to enumerate the principal properties of hydrated lime plaster.

1. It has greater strength than old fashioned lump lime plaster.
2. It has high fire resistance.
3. It remains plastic for a sufficient length of time to enable the mechanics to work true surfaces and angles with a minimum of labor and effort.
4. Will adhere to tile, brick or concrete.
5. Ridging due to expansion of wood lath can be readily corrected.
6. Acts as preservative of metal lath due to absence of acidity.
7. If painted or decorated, a sizing coat is not required.
8. Improves the acoustics of the building, because it is less resilient.

Stucco—The word as used in this country applies to exterior plastering; and due to the readiness with which it lends itself to artistic treatment and the production of pleasing effects at reasonable cost, it is daily gaining in favor. The principal requirements of stucco are plasticity during application, permitting good workmanship with minimum effort, watertightness and strength after hardening. Being exposed to the weather, its principal ingredients are portland cement, hydrated lime and sand. The manufacturers of portland cement, and the various manufacturers of lathing materials include 10 to 25 per cent of hydrated lime in their specifications in order to produce plasticity and watertightness.

Brick Mortar—Lime mortar was used during the middle ages and is used at present in many countries. In many parts of this country lime mortar is used for ordinary building construction.

The slaking of lime and mixing of mortar is frequently entrusted to common laborers without sufficient knowledge of the requirements and the importance of their task. Lime is often improperly slaked—burned or drowned—insufficiently aged and the mortar irregularly proportioned.

The fact that hydrated lime is furnished in packages of definite weight and that the quantities can be measured in a dry state makes proportioning accurate, and inspection convenient.

As to comparative strength of lump lime and hydrated lime, tests made under the supervision of Prof. Ira H. Woolson of Columbia University, show that both in tension and in compression hydrated lime mortars show greater strength than mortars made of lump lime.*

Many engineers were and some still are of the opinion that the more portland cement a mortar contains the stronger it is and that the addition of lime weakens it. These assertions and assumptions were based on laboratory tests made on specimens independently of their contact with brick; but such conditions do not exist in the field. To determine the strength of brick mortars in contact with brick, Prof. Jas. S. Macgregor of Columbia University tested 74 brick piers 8"x8" by seven feet high, each laid up by a brick mason in his usual way. Face brick of high compressive strength was used with a view to causing deformation and weakness to predominate in the mortar rather than in the brick. Seven different mixtures were used. All mortars were 1: 3 by volume but the proportion of hydrated lime to cement was varied, as shown in table No. 1.

TABLE NO. 1
KEY TO MORTAR MIXES

Mix number 1-1 cement-3 sand.

Mix number 2- 1 cement- 3 sand, 10% of cement by volume replaced by hydrated lime.

Mix number 3- 1 cement- 3 sand, 15% of cement by volume replaced by hydrated lime.

Mix number 4- 1 cement- 3 sand, 25% of cement by volume replaced by hydrated lime.

*Proceedings of A. S. T. M., 1910, page 328.

Mix number 5- 1 cement- 3 sand, 50% of cement by volume replaced by hydrated lime.

Mix number 6- 1 cement-3 sand, 75% of cement by volume replaced by hydrated lime.

Mix number 7- 1 hydrated lime- 3 sand.

TABLE NO. 2
FACE BRICK PIERS

Ultimate Resistances—Pounds per square inch.

Mix Number	1	2	3	4	5	6	7
Age 7 days	2630	3080	2890	3120	2670	1945	1535
Age 28 days	2840	3170	3230	3470	3100	2370	1870
Age 3 months	2840	4435	4300	4170	3820	2720	1950

Proportionality Limits—Pounds per square inch.

Values of each series in most cases, averages of three tests.

Mix Number	1	2	3	4	5	6	7
Age 7 days	625	625	625	703	364	125	115
Age 28 days	1094	903	937	755	703	187	156
Age 3 months	1127	1094	1354	1342	1042	228	140

Modulii of Elasticity.

Mix Number	1	2	3	4	5	6	7
Age 7 days	3,300,000	3,419,000	3,674,000	4,023,000	3,342,000	905,200	162,800
Age 28 days	4,018,000	3,874,000	3,832,000	4,061,000	3,841,000	1,171,000	367,460
Age 3 mos.	3,160,000	4,876,000	4,177,000	4,088,000	4,027,000	2,624,000	923,210

As can be seen from table No. 2 and in graphical form from Plate No. 2, the general result was that all mortars containing hydrated lime up to the point where 50 percent of the portland cement was replaced by 50 percent hydrated lime (by volume), the mortar showed greater compressive strength than the straight portland cement and sand mortar. It is interesting to note that the piers built with mortar of this last composition (designated as No. 5) showed at all ages a greater strength than a cement mortar. At 90 days the strength was more than 30 percent greater.

If we compare these results with those to be expected when we consider the behavior of mortar specimens tested independently of contact with brick, we would naturally look for some explanation.

Prof. Macgregor's interpretation of the results reads as follows:

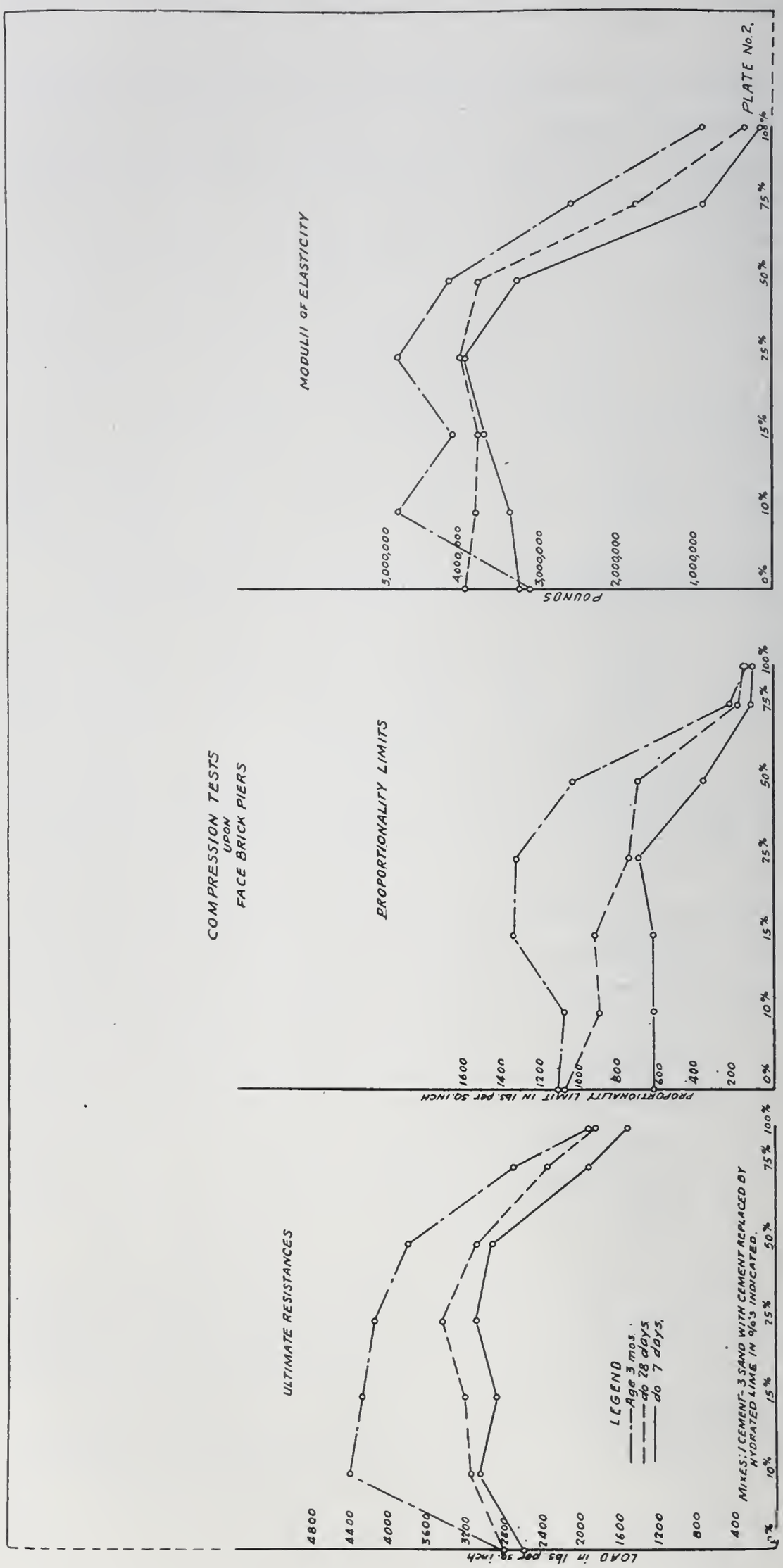

Fig. 2. Diagram Showing Ultimate Resistances, Proportionality Limits and Modulii of Elasticity on Brick Piers Tested by Prof. James S. Macgregor, of Columbia University.

"Inquiry into the reason for this reversal leads to the following explanation:

"First: The replacement of portland cement by hydrated lime renders a more plastic mortar which spreads easily on brick work and in consequence insures more uniform bedding with less care.

"Second: The so-called 'suction' of the brick which steals a great deal of the moisture from the portland cement mortars has been noted to effect lime-cement mortars to a much less degree. The addition or replacement of hydrated lime aids in the retention of moisture.

"Third: Moisture which is lost, due to causes cited, probably leaves the mortar with an insufficient amount to completely hydrate or properly hydrate the portland cement, a condition which is largely overcome by the use of hydrated lime."

In very few of the present day masonry structures of considerable height does the brickwork carry the full load. In most cases it serves as a covering or filler only, and is supported by a reinforced concrete or steel skeleton. The brick chimney is one of the few exceptions. Chimneys are entirely self supporting, and as a consequence the loads at and near the base are heavy. These loads are materially increased during wind storms, which cause an increase in the leeward side and a reduction in the windward side. The interior is subject to high temperatures, while the exterior is exposed to the seasonal temperature changes. It may be a surprise to some engineers to know that in the building of practically all brick chimneys, the mortar contains about two parts of lime to one part of portland cement by volume. In some, even a higher proportion of lime is used.

The knowledge of these facts is of great economic importance if we consider that 9 to 10 billions of brick are used annually in the United States. A mortar composed of ½ part portland cement, ½ part hydrated lime and 3 parts of sand (all measurements by volume) costs at present prices at least 60 cents per thousand bricks less than a 1:3 straight portland cement mortar.

Paving grout may, in some respects, be classed with brick mortar, although it is used at a different consistency and in different proportions. The addition of hydrated lime to brick mortar, though in smaller percentages than is beneficial for the

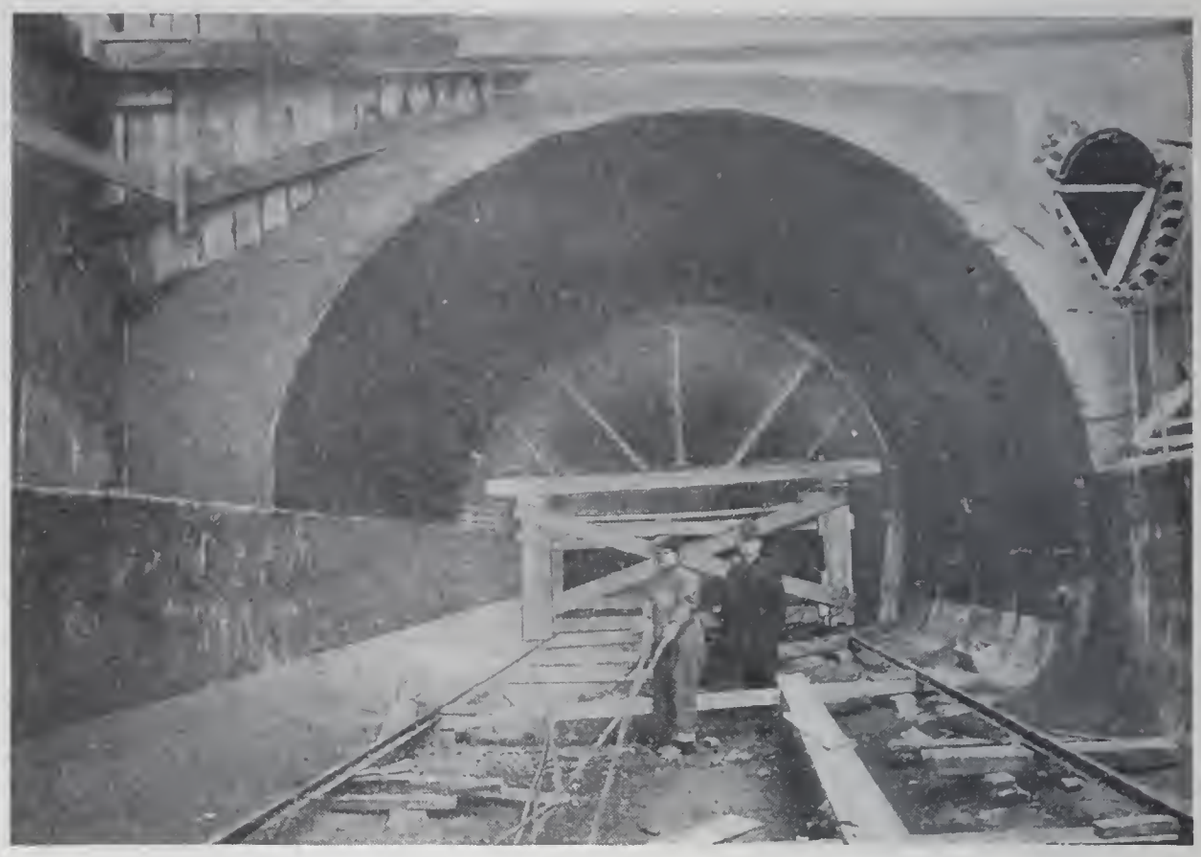

Fig. 3. Stony Brook Sewer, Boston, Mass.

reasons given above and in addition, because a plastic and easily flowing grout may be produced by the addition of hydrated lime, without the danger of segregation during pouring, and of shrinkage during setting.

Concrete—Though our knowledge of concrete is far from complete, we have as the result of years of study and observation, both in the laboratory and in the field, established certain rules, which, if followed, will assure concrete of satisfactory quality. There are, however, so many variables which effect the quality of concrete in the field, that it is no wonder it is not always what it should and is intended to be. We shall not attempt to discuss all of these variables, but will focus our attention on one of the most important, viz.; the quantity of mixing water and consequently the consistency of the mixture. It is fully demonstrated that, within certain limits, the more water used in the mixing of concrete, the lower will be its compressive strength.

Tests conducted by the U. S. Bureau of Standards,* Prof. Abrams of Lewis Institute ** and others, have proved conclu-

*Technologic Paper No. 58.
**Engineering News-Record, Apr. 26, 1917, Concrete, July, 1917.

sively that the strength of concrete of a very wet consistency frequently found in practice may be as low as 20 to 25 percent of the maximum which can be obtained with the same materials, but with a smaller quantity of water.

It is true that the consistency which gives maximum strength is too dry for handling and placing and for this reason we have to use somewhat more water and sacrifice some of the strength to practical considerations, namely: plasticity and mobility. The weakening effect of an excess of mixing water is partly mechanical, partly chemical. In most cases both. If concrete is mixed with an excess of gauging water the grout runs away from the aggregates and leaves honeycombs, stone pockets and other weak spots. Furthermore, this excess of water will cause the materials of which the concrete is composed to segregate and settle in strata according to their respective sizes. These are mechanical defects whose weakning effect is too apparent to need any further proof.

Everybody who had opportunity to observe concrete placed in a very wet consistency is acquainted with the grayish substance, termed laitance, which settles on the top of the concrete after being placed, or after the excess water has ceased to be agitated. This laitance represents just so much portland cement lost.

The consistency of concrete as used in the field is a compromise between maximum possible strength and a consistency suitable for economical handling and placing. These considerations are of paramount importance. We may define the best practical consistency as the driest consistency which will permit economical and practical handling in the field.

As simple as this definition may seem, there is frequently a divergence of opinion between the engineer and contractor as to the interpretation of what constitutes the "best practical consistency." The fact is that it is common practice to mix concrete at too wet a consistency. As a rule this is done to permit easier and more economical handling and placing of the concrete, but sometimes it is done to make it appear well mixed, though the mixing time has been cut down; and often for no other reason than plain ignorance.

Fig. 4. Stockton Street Tunnel, San Francisco, Cal.

To remedy the two latter causes of the use of an excess of water is only a question of supervision and inspection, but to the first one we have to give serious consideration.

The ease with which concrete may be handled and placed depends principally upon two qualities, namely plasticity and mobility. Since we have shown that to try to produce these qualities by the use of an excess of water is detrimental to the strength and permeability of the *finished product,* let us see by what other practical and economical means they may be produced.

It is well understood that hydrated lime is the most plastic of all building materials. When added to portland cement mixtures it acts as a lubricant. This is due to the fact that hydrated lime, upon being brought in contact with water, loses its granular character and is converted into a colloidal paste of extreme smoothness. This property of hydrated lime is turned to good account by using small quantities as an addition to concrete, in order to impart to it the degree of plasticity and mobility required for easy and economical placing, without the necessity of

Fig. 5. St. Louis Filtration Plant, St. Louis, Mo.

using an excess of mixing water. As a result the hydrated lime may be considered as a lubricant, both external and internal.

As a result of the external lubrication it will slide through chutes for a longer distance and at less inclinations; will leave carts, barrows and buckets easily without having to be dug out, even after transportation of considerable distance, or after considerable waiting in case of interruption. Recent experience has also demonstrated that the addition of hydrated lime to concrete greatly facilitates transportation by the pneumatic method. For the same reason it will fill the forms more completely with less spading and produce more nearly perfect exterior surfaces. The fact that it will surround the reinforcing steel more thoroughly insures full bond and better protection. All this occurs at a consistency where the paste is firm enough to keep both the fine and coarse aggregates in suspension and uniformly distributed throughout the mass. The paste being of a sufficiently firm consistency, it will not flow away from the aggregates and cause the formation of stone pockets and honeycombs.

Besides eliminating the larger or visable structural defects it reduces the size of the smaller voids through internal lubrication which permits the particles of the aggregates to easily slide over each other, thereby causing them to range in a relative position, which is the most advantageous for maximum density. Finally even these pores of greatly reduced size are filled with finely divided colloidal material.

After the particles of hydrated lime repose in the pores their role is not ended. The water that is required to convert the hydrated lime powder into paste is held until after the portland cement has used up its own gauging water for partial hydration, then this water is turned over to the portland cement for its further hydration and development of the colloid which is important for the development of both strength and density.

Watertightness—I have not referred so far to hydrated lime as a watertightening medium. By analyzing the foregoing, it is fair to conclude that a concrete possessing the properties imparted to it by hydrated lime will be water tight. It is a matter of record that it was its watertightening quality which caused its earliest use in concrete. The U. S. Bureau of Standards, in reporting on a test of upwards of 40 materials recommended for

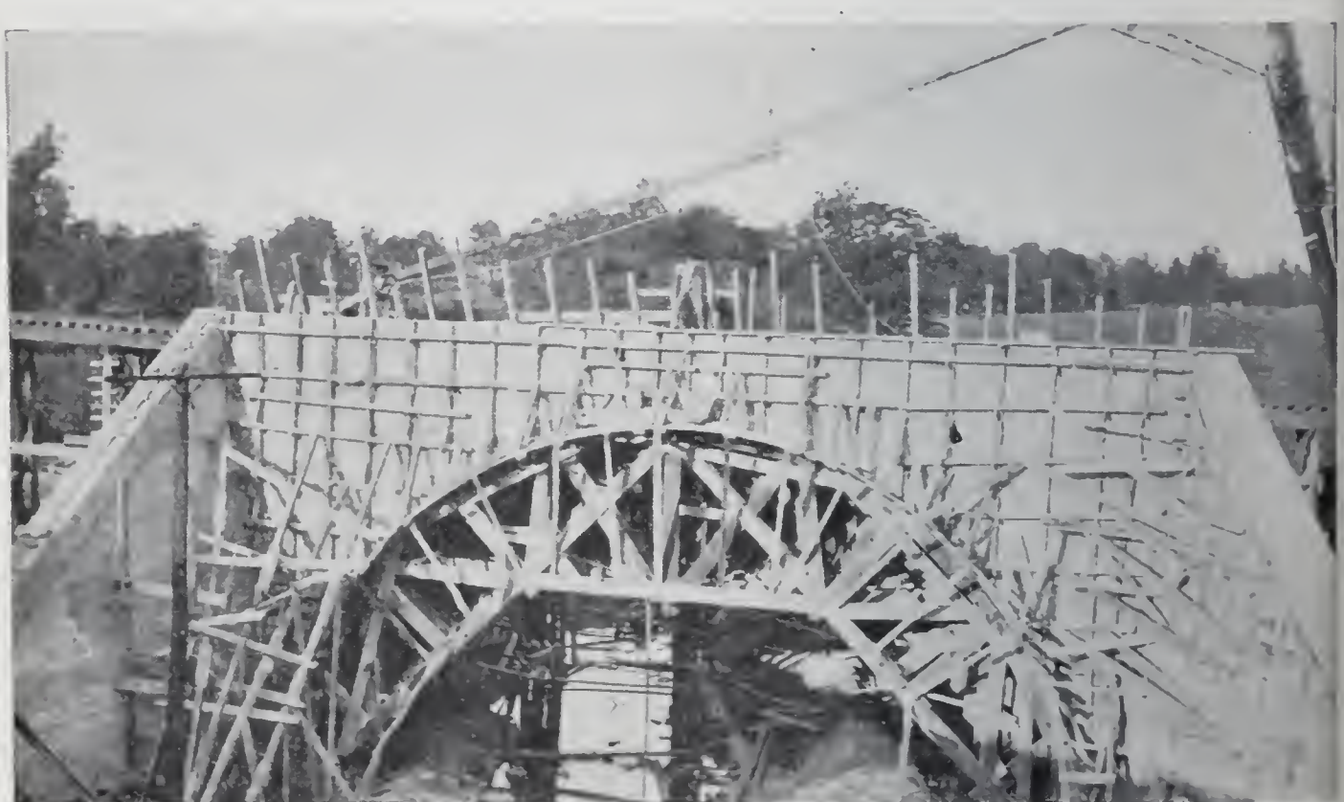

Fig. 6. Bridge No. 14, Vandalia Lines.

making concrete watertight, states on page 59 of Technologic paper No. 3, as follows:

> "This is the most efficient medium employed and resulted in an almost impermeable mortar at the two-week test. Its value is probably due to its void filling properties and the same results could be expected from any other finely ground inert material, such as sand, clay, etc."

Considering these materials merely as void fillers the various substances other than hydrated lime might be effective, but to produce silicia in as finely divided state, or clay as free from organic matter, as hydrated lime, would prove in most cases commercially prohibitive.

Mr. Sanford E. Thompson used hydrated lime in the construction of the Waltham, Mass. Reservoir and his account of the preliminary tests and practical applications contains much useful information regarding the use of hydrated lime to make concrete watertight.*

There are certain technical and economic criteria which determine the degree of usefulness of every structural material and the study of a large number of concrete structures, both in course of erection and during years of service, has shown that a watertightening material to satisfy both the technical and economic requirements, should possess the following properties:

1. It should in no way injure the concrete, either chemically or physically.

2. It should be preferably of a character chemically similar to that of cement.

3. It should enter the mixture in its most effective form and not rely for its waterproofing properties upon chemical reactions which have to take place after it is brought in contact with the ingredients of the concrete.

4. It should be permanent and not subject to decomposition or decay; therefore, it should be a mineral compound rather than organic.

5. The material should be finely divided, bulky, and preferably of a colloidal nature, so as to lubricate the mass during

*Permeability tests of Concrete with the addition of Hydrated Lime. A. S. T. M. Vol. 8, 1908, page 500.

handling and placing and act as a void filler in the hardened concrete.

6. It should readily mix with water and adhere to the other ingredients of the concrete.

7. It should be convenient to handle and easy to proportion and incorporate in the mix.

8. It should be inexpensive so as not to increase the cost of concrete materially.

9. It should be a staple produced in all parts of the country, rather than a specialty.

10. It should be obtainable wherever portland cement is sold and used.

What has gone before and what follows should contain its own answer as to how closely hydrated lime conforms to these requirements.

Before passing on to the method of proportioning and specifying hydrated lime, we must dwell upon a phase of waterproofing which deserves more attention than it has received here-

Fig. 7. New Austin Dam.

tofore. In the past we were in the habit of thinking it necessary to make concrete watertight only when it was to be used in a structure which was to contain or exclude water, such as reservoirs, tanks, sewers, dams, etc. Extensive investigations into the effect of alternate wetting and drying on concrete have brought out facts which indicate that all concrete that is exposed to the elements should be as impermeable as possible. The fact is that moisture changes will cause much greater volume changes in concrete than temperature changes. According to Prof. Alfred H. White,* the volume changes caused by the alternate wetting and drying of concrete are sometimes several hundred times greater than those caused by the usual temperature changes between seasons. This seems to indicate that surface and even internal disintegration which occurs sometimes years after the completion of the structure, may be attributed to this cause. That frost action is in proportion to permeability, does not require any proof.

Mr. Sanford E. Thompson, who, by the way, was one of the earliest users of hydrated lime in this country, in the last edition of "Concrete Plain and Reinforced" recommends the use of 5 to 15 percent hydrated lime, by weight of cement, the quantity to be used depending upon the nature, size and grading of the aggregates, especially the sand, and the purpose for which it is used, whether for waterproofing or general improvement of the concrete.

To make concrete watertight we have found the following quantities to give satisfactory results:

To 1:2:4 concrete add 8 to 10 lbs; to 1:2½:5 mix add 12 lbs. and to 1:3:6 add 15 lbs. of hydrated lime for each sack of portland cement used.

The hydrated lime is introduced into the mixer with the other materials without any preparation and mixed in the usual manner and for the usual length of time.

*"Volume Changes in Concrete," Proceedings of the International Engineering Congress, San Francisco, Cal., Sept., 1915. Alfred H. White, Professor of Chemical Engineering, University of Michigan, Ann Arbor, Mich.

DISCUSSION

Mr. John A. Ferguson:* I have studied the question of hydrated lime a great deal and read the paper presented to-night with considerable pleasure and profit. The subject of the effect of hydrated lime in concrete has not been given the proper attention in the past by those having in charge the making of concrete. In a great many cases, those using concrete know very little about the effect of hydrated lime upon it. It is to be hoped that in the future scientific knowledge of the use of hydrated lime may be developed along the line of investigations recently conducted by Prof. Abrams, as cited in the paper of this evening, as to what may be done with concrete to improve it. The question of materials is, to my mind, as important in the use of concrete as it is in steel.

In the manufacture of steel, we are always careful to be dead sure that all the workmanship is perfect. We have very strict methods for inspection of materials after fabrication in order to determine whether or not they are fit for the work. These things are now being worked out by men who are devoting a great deal of their time and effort, without compensation, for mere love of the work, and I believe from what I see going on at this time that within the next year knowledge concerning the use of concrete and its manufacture will be much more extended. We will become better acquainted with it as a structural material, especially as it seems to be, at the present time, about the only structural material we can obtain for a good many purposes.

In view of the foregoing, any addition of materials or any new methods of construction which may be employed in the manufacture of concrete scientifically in order that it be properly worked out and easily handled, is going to be a very acceptable proposition. It will assist in showing the users of concrete that their work will be dependable. The great purpose of all engineering, as I take it, is simply to produce a scientific study of materials and methods, after which, by their application the work is done more economically, with more certainty and a higher grade product is assured.

* Secretary-Engineer, Building Code Committee of Council, Pittsburgh, Pa.

In view of the above remarks, I would urge upon those making a study of the effect of hydrated lime on concrete that they extend the scientific and chemical part of their studies. It would, perhaps, be well to go a little more into detail than we have to-night.

Sometime ago Mr. Johnson made some tests by which he found that the voids in concrete might be stopped, but his recent investigations as well as those by Mr. Abrams and others, have proved that there is too much water used ordinarily. I heartily support the principle given in the paper this evening, that by adding certain material to cement and concrete the plasticity of concrete is improved and is thereby made denser. If hydrated lime can do this in an effective way, the use of this material will prove to be as beneficial as the almost universal use of concrete has come to be, and the safety and reliability of concrete and reinforced concrete will be one long step nearer perfection.

The Author: Mr. Ferguson's comments coincide in every respect with the aims and purposes of the Hydrated Lime Bureau. While the use of small percentages of hydrate in concrete and larger percentages in mortars is not new, about three years ago the manufacturers of hydrated lime realized the necessity of a clearinghouse where all technical information relating to their product should be collected, sorted, sifted and made available to all who should have it. The fact that a large number of structures of all classes in which hydrated lime was used for one reason or other, was in existence, made field data available for the trouble of collecting it; but the collection of scientific data is a slower process. In the first place, it is a comparatively recent practice to test the effect of any material used as a constituent of concrete on large size concrete specimens containing all component parts, including large aggregate. In the second place it is hard to draw conclusions from test results obtained in different laboratories unless the complete record of each variable entering into the preparation of the specimens is available. And finally it requires considerable time and study to carry tests to a conclusion which will result in the proper correlation of laboratory and field.

While the data so far available is encouraging, the results in the field are such that they do not leave room for doubt as to the fact that the use of hydrated lime is on the increase and it is here to stay as an addition to concrete.

Mr. Kenneth H. Talbot:* Although the addition of hydrated lime has in many instances proved a great satisfaction to the contractor due to the added plasticity of the concrete, it must not be considered as a panacea for all ills, nor must we fall into the error of believing that plasticity is the element of concrete which should be given first place. This place must go to strength.

Before entering the discussion of this paper there are a few questions which I wish to ask the speaker; First: What is the effect of hydrated lime on the hardening of concrete under low temperature conditions such as exist during the winter months? Second: Is there any necessity for the use of hydrated lime when the mixing is continued for the proper length of time? An interesting sidelight on this last question was brought to my attention on two jobs in Cleveland; on the first the mixing was poorly done but hydrated lime was used, while on the second the mixing was well done and no hydrated lime was used. On the one on which hydrated lime was used the concrete was not as plastic as on the second job. Certainly we cannot expect to get uniformity of strength and quality of concrete if it is not kept in the mixer a sufficient length of time.

Based upon our laboratory investigations and those of other engineers I am prone to believe that we cannot place too great credence on mortar tests, as careful analysis of results in the laboratory has shown that there is much discrepancy between tests on small specimens. It is a mistake to draw conclusions on the strength of concrete from mortar briquets or even from small compression specimens using cement and sand mixture.

I would like to ask the speaker concerning the effect of hydrated lime on efflorescence appearing on walls and other exposed concrete work. Also, whether there is any chemical combination of the cement and hydrated lime subsequent to mixing, or whether the hydrated lime acts simply as an inert filler? Laboratory re-

*Division Engineer, Inspection and Information Bureau, Universal Portland Cement Co., Pittsburgh, Pa.

sults have shown, I believe, that with certain sands the addition of hydrated lime does materially add to the strength of concrete, while with other sands with a different granulometric analysis this effect is not apparent, and with a very fine sand as is customarily used in mortar work, the addition of a fine inert material such as hydrated lime will have a tendency to reduce the strength.

The Cow Bay sand to which the speaker refers is, as I remember it, a very coarse sand and undoubtedly the results which he reports would be borne out by further investigation. On the mortars with which a considerable portion of hydrated lime is mixed early absorption or evaporation of the water is necessary in order that the lime may harden. This very action is disadvantageous to cement mortar as it weakens the strength of the mortar. It would seem, therefore, that before we can know how much hydrated lime to add to the concrete, or whether to add it at all, we must determine the gradation of the sand, the mixture to be used and the conditions under which the work is to go ahead.

The photographs of concrete roads were very interesting to me. Whether or not the additional plasticity is worth the additional cost, I am not prepared to say, but I am informed by engineers who have made some investigations in states other than Delaware that in practice after two or three years there appears to be no difference between the action of concrete road slabs in which hydrated lime was used and those in which hydrated lime was not used. I am impressed with the necessity for making further studies as to the effect of hydrated lime before making definite recommendations concerning its use.

The Author: Before replying to Mr. Talbot's questions, I have to agree with him that hydrated lime is not a panacea against ignorance, greed or poor materials. I also agree with him that to strength belongs the first place and the plasticity is important only in so far as it contributes to homogeneity and density, which are the most important physical properties of strong concrete.

To answer his first question I can only say that hydrated lime was used in concrete placed during winter on a number of jobs, but we have no knowledge that it behaves differently than any other concrete, if the usual precautions of winter concreting are observed. One of the photographs shows part of the structure

covered with snow and the work on some of the other structures shown was carried on through the winter.

To answer the second question in a definite form would require the exact knowledge of what constitutes the proper mixing time. Some engineers specify one minute as a minimum, the joint committee recommends a minute and a half, and two minutes would probably be better. We never approve of the reduction of mixing time, but recommend that concrete should be mixed for the length of time approved by best modern practice. This is only natural in view of the fact that in order to do its duty, hydrated lime must come in intimate contact with every particle of the other ingredients.

Mr. Talbot's reference to the two Cleveland houses contains its own answer. He states: "On the first, the mixing was *poorly* done but hydrated lime was used, while on the second the mixing was *well* done and no hydrated lime was used." The only way it would be possible to compare the two results would be if the concrete for both houses had been mixed for the length of time accepted in good commercial practice.

I do not doubt that, within certain limits, the concrete improves with the length of mixing time, but the inspection of some of these Cleveland concrete houses raised in my mind the question, what the upper limit of mixing time is. The commercial phase of it is easy of solution if we consider that with a three minute mix the output would be half as much, as with a minute and a half mixing time. But the technical solution is much more difficult. The upper limit of mixing time, in my opinion, depends upon the proportion and grading of the component parts and upon the consistency. The inspection of the surfaces of some of these houses, in which the concrete was mixed longer than usual, shows semispherical cavities, which I can not attribute to anything but air occulded in the concrete during excessive mixing, very much in the same manner as is done when cake dough is beaten. This phase of concrete mixing, I believe, would bear some investigation.

As to efflorescence, besides the presence of certain soluble salts, it is a question of permeability and as the permeability is reduced, efflorescence is reduced. During rain, or other wetting,

the masonry absorbes water, which brings certain salts in solution. When the surface begins to dry the water is drawn to the surface through capillarity, evaporates and deposits the salts on the exterior. The fact that hydrated lime reduces permeability and produces a denser surface, explains why concrete containing hydrate is subject to this disfiguration to a lesser degree than a more porous concrete.

We have at present no definite knowledge on which I could base any statement regarding any chemical reaction between cement and hydrated lime, outside of its effect upon the hydration of the cement by turning over to the cement the water held by the lime, at a time when it contributes to the further hydration of the cement. I heard, however, a hypothesis advanced by one who can speak with authority on plastic materials. He said that clay products manufacturers make use of the fact that small percentages of an alkali increase the plasticity of colloidal clays. He thought it possible that hydrated lime reacted in a similar way with portland cement. This may open up a new avenue for investigation, but at present we have no proofs. One thing is sure, that no detrimental chemical effects can be found.

Mr. Talbot's reference to the effect of the quality of sand upon the quality of mortar does not require any proof. Prof. McGregor used Cow Bay sand, because it is a commercial sand used for mortar in his locality and represents a good, average mortar sand. He wanted to make the test as nearly approaching practice as possible. The sand has to be well graded for mortar as well as concrete, although for the former use it contains, in some cases, more fine grains. We always emphasize the importance of the grading of the sand and on many occasions when we know that the local sand used in concrete contains a high percentage of fine grains we recommend smaller percentages of hydrated lime than even the engineer or contractor would be willing to use.

I did not deny at any time that good concrete can be made without hydrated lime and I showed the views of the Coleman Du Pont Road in Delaware, because I am more familiar with it than with any other. A concrete road, being a horizontal sheet exposed to the elements over its whole surface is more subject

to expansion and contraction due to alternate wetting and drying than any other concrete structure. And anything that reduces this evil will lengthen its life. When I was in Delaware I checked up the six longest slabs *without expansion joints and without cracks* and found that the longest slab containing hydrated lime was approximately 360 feet and the average of the six longest ones approximately 325 feet. The longest one without hydrated lime was 265 and the average of the six longest ones approximately 210 feet. All these slabs were at least one year old. The trouble is that it takes years to draw definite conclusions regarding the wear of roads, but we have to be patient.

Mr. Charles Upham, former Chief Engineer of this road, and now Chief Highway Engineer of the State of Delaware, says that he believes he is getting his money's worth through the improved working consistency alone, although he believes that it reduces volume changes also.

PROF. H. R. THAYER:* I believe that those who have heard this interesting paper will agree with me that it is also very instructive.

The addition of hydrated lime to mortar is not at all new, neither is its use in rendering concrete waterproof. Both expedients are often used by engineers. The new point in this contribution—and a somewhat radical one—is the employment of a small portion of hydrated lime in plain and reinforced concrete for the purpose of improving it.

Now these structural materials, especially the latter, are very complex products whose quality is dependent upon a large number of factors which we may classify as,—

(a) Proportions—under the control of the designer.

(b) Quality of cement, water, sand, and coarse aggregate.

(c) Workmanship.

The proper mixtures (a) to be employed are fairly well determined, standardized, we may say. (b) has received a great deal of attention in recent years. Of course everybody has always known that the character of the cement was important but the scientific knowledge of the effect of other component parts

*Assistant Professor Structural Design, Carnegie Institute of Technology, Pittsburgh, Pa.

is comparatively modern. Now this new proposition touches the various troubles which are due to poor workmanship, (c) or to speak more accurately, those due to commercial necessities. If the concrete is kept comparatively dry, it needs longer for thorough mixing, and there is a great deal of difficulty in thoroughly filling the forms, particularly around the steel. On the other hand if a wet mix is employed, there is danger of segregation and honeycombing, while the strength of the mixture is decreased.

Now the speaker advocates the introduction of hydrated lime in small quantities, at the same time using a dry mix, this addition giving us fluidity, at the same time avoiding the disadvantages of the wet mix. Those who are familiar with such matters will agree with me that the combination of these qualities will increase the value of the concrete at least 10 percent, an advantage worth 50 cents to $1.00 per yard, enough to render the use of the hydrated lime an economical proposition for cement users.

Two objections may be raised. In the first place, there is no motive for contractors to employ the product, nor for designers to require it. For the writer knows of no building code or specifications which allows any preference for mixtures using hydrated lime, while the extra material to be handled could hardly be considered as a cheaper proposition. If we are dealing with a superior product, some recognition of it should be made among engineers by increasing allowable stresses. This brings us to the second objection. Its good qualities should be first established, either by a series of comprehensive, scientifically conducted tests or by extensive practical use. The speaker has given us some of both which would seem to point to the concluisons which he advocates.

The writer—and he believes that the profession at large feel much the same—will watch with the keenest interest the developments along this line.

The Author: I am sure that when Prof. Thayer states that I am advocating a dry mix, he means a relatively dry mix, a mix which with the addition of hydrated lime is mobile enough for all practical purposes without containing an excessive amount of water.

I may be permitted to follow, in my reply to Prof. Thayer, an order different from that in which he presented his remarks.

The proofs of extensive practical use of small percentages of hydrated lime in concrete are to be had for the asking. As to laboratory tests, some results will be available soon; other investigations are under way and are rather promising; but a great deal more is to be done and will be done along this line before we can definitely establish laboratory conditions in the field or field conditions in the laboratory and most of all until we can definitely establish the connecting link between the two.

That the contractors have a motive in employing hydrated lime in concrete may be taken as proof of the fact that some contractors who used it before, are willing to use it at their own expense and it takes a strong motive to open a contractor's pocketbook.

Mr. W. P. Anderson, President of The Ferro Concrete Construction Company, of Cincinnati, one of the most prominent concrete specialists of the country uses hydrated lime at his own expense, even when not specified, and at the last annual convention of the American Concrete Institute, he gave expression to his conviction that the addition of approximately 5 percent of hydrate in concrete building construction means a saving rather than an expense.

Mr. Combs of the McCormack-Combs Construction Company, builders of the St. Louis Filtration Plant, made the statement that he does not believe that the hydrated lime used on that job cost them anything, and they used 700 to 800 tons.

As to any allowance that should be made in the unit stresses in concrete to which hydrated lime has been added, this I believe, will come in time. But first we have to creep before we walk.

The fact that he has the assurance that the structure he designs will be at least as strong as he planned it to be, and that it will be able better to resist the action of the elements is, I believe, sufficient incentive for the engineer to specify it.

Mr. Edward Godfrey:* Mr. Nagy has brought to the attention of engineers, some facts that should be emphasized and

* Structural Engineer, Robt. W. Hunt & Co., Pittsburgh, Pa.

understood. It is important that we understand the action of hydrated lime and its benefits, for there are undoubted advantages in its use in mortar and concrete.

The propoganda for the use of this material is a clean one, which is more than can be said of some efforts used to introduce certain materials. So far as the writer knows, there is nothing to conceal or live down, Mr. Nagy has given in a clear way reasons why hydrated lime added to cement is not, or ought not to be harmful. He also cites laboratory tests showing its benefits. It would be well if he would cite in his closure examples of structures where hydrated lime has aided in producing waterproof concrete; where it has aided in spouting concrete and conveying it through long chutes; and any other instances where its advantages have been shown in practical work.

The old idea of the action of Portland cement in its hardening process, an idea that is still adhered to by some, was that the setting of cement is a crystalizing process and that these crystals, interlacing, are what holds the mass together. How such an idea could be given any credence is a mystery. Imagine a mass of needles heaped in such a way as to interlace in all directions, as the crystals of cement were and are supposed to be in the mass. Imagine, if you can, a mass of inert material being held together by such means, or an inert substance being held together by grains of sand packed in the interstices. There is some crystalization in the hardening of cement, but it is merely incidental. The useful part of cement is a colloid and it is the hardening of this colloid, a material the nature of glue, that holds together the sand and stone. Until this is well understood, no intelligent treatment of cement is possible.

Hydrated lime is also a colloid and its action is similar to that of cement. Lime becomes colloidal by the mere slaking of the quicklime without any process of grinding. Portland cement, however, becomes colloidal only by the process of very fine grinding. Portland cement clinker, before grinding, is totally inert in the presence of water; in fact, a large portion of finely ground cement is inert. When separated from the colloidal portion this inert portion acts like fine sand. If the whole of the cement were fine enough to be colloidal, it would be difficult to incor-

porate it with the sand and stone in such a manner as to distribute the colloid through the mass, as the colloid is so light that water tends to wash it out and segregate it. The lime colloid does not act in the same way and does not wash out so readily. It seems to have the property of absorbing the water and swelling at once, rather than being washed away by it. Lime intimately mixed with the cement, aids in holding the colloid of the cement in the mass and thus helps to prevent its segregation. It also acts as a lubricant so that less water is needed for the free flow of the concrete.

Mr. Nagy states that microscopic studies have shown that laitance is distributed throughout the concrete and besides interferring with the proper bond, it represents just so much Portland cement rendered inert. He doubtless refers to the paper by Nathan C. Johnson, published in Engineering Record, Dec. 30, 1916. This paper did not prove much of anything. It was, in fact, quite misleading, because of the fact that Mr. Johnson failed to grasp the real nature of laitance. He recommended the wasting of laitance and failed utterly to see that when laitance is lost, the cement itself is lost. Even after Mr. Johnson's attention was directed to a paper of mine that demonstrated this very clearly, he ignored the paper and its proofs in an effort to justify his wasting method. (See Engineering Record, March 3, 1917.)

Laitance is simply the colloidal part of cement, the more of it appearing on concrete the more the strength of the cement is sapped. If a large portion of this colloid escapes from the mass, as is the case sometimes when concrete is dropped through water, the concrete will be rotten. Wasting the laitance is no more a remedy than treating the symptoms of a disease is a remedy. The only real remedy is to prevent the segregation of the colloidal portion of the cement and to see that the colloid is intimately mixed through the mass. Thorough mixing is one prime requisite and one upon which Mr. Johnson did not touch. Mr. Nagy, apparently taking his cue from Mr. Johnson, seems to think that harm is done if this laitance is mixed through the mass. My paper published in Engineering Record, October 16, 1909, p. 435, demonstrates that if this laitance or cream of cement is mixed thor-

oughly into the mass, a good sound stone results, or conversely, when it is allowed to gather on top a rotten stone results.

This was demonstrated in the following way. A quantity of cement was boiled and agitated for several hours. It was then poured into a glass. The cement settled in two distinct layers, one black and the other light gray. This was allowed to harden. In several weeks the upper layer, the laitance, reached the consistency of soft chalk and the bottom layer had no adhesion. Similar treatment was given another quantity of cement, except that after it had settled in the glass, nearly all the water was poured off and the two layers were thoroughly mixed. This was allowed to harden for several weeks and a good sound stone resulted.

Laitance is by no means a by product, nor is it decomposed cement, as it is sometimes said to be. It is the essence of the cement rendered useless by segregation. It should, of course, be gotten rid of when it does gather, just as a sore caused by a disease should be healed, but the cure of the disease is a thing apart. The segregation of the colloid must be prevented, otherwise this fine portion of the cement that the manufacturers spend hundreds of thousands of dollars to produce will be lost to the detriment of the concrete. Thorough mixing of the concrete is one way to avoid this segregation. "Batch a Minute." Thirty seconds in the mixer is one way to encourage it. The recommendation of the Joint Committee of 1½ minutes in the mixer is a good one.

Hydrated lime aids in preventing the segregation, but it will not take the place of proper mixing.

THE AUTHOR: While I am acquainted with Mr. Johnson's paper to which Mr. Godfrey refers, and also Mr. Godfrey's paper on the subject, as it happened in this case, I was not quoting Mr. Johnson, but a statement found on page 298 of Taylor and Thompson's Concrete Plain and Reinforced, 1916 Edition. To quote verbatim: "* * * and there is a tendency to form laitance on the surface or even through the mass which permits the penetration of water."

Without entering into the discussion of the chemical nature of this elusive substance, we may safely say that the presence of laitance in concrete in a *visible* form means that the finest and most useful part of the cement has been rendered unavailable for the purpose for which it was intended. It is not produced in a visible form unless an excess of water is used in mixing and this extremely fine material is floated to the surface or deposited in cavities caused by segregation instead of being distributed throughout the mass.

I am fully in accord with Mr. Godfrey that it is a symptom and not a disease and our work is directed at the root of the evil of segregation, through advocating a means to produce a plastic and mobile concrete without the use of an excess of water.

Mr. Johnson has certain views which I do not share myself.

In my reply to Mr. Talbot I referred to the possibility of a chemical reaction between lime and cement which is beneficial to the development of the cement colloid.

As to the property of hydrate to prevent the floating away of the cement, a few days ago a construction superintendent expressed the result of his observation on this phase of the use of hydrated lime in the following lucid, though unscientific statement: "It makes the grout smear all over the stone and makes the stones stick together."

My reply to Mr. Talbot's remarks on the proper mixing of concrete applies as well to Mr. Godfrey's closing sentence.

Author's Closure: Hydrated lime as a structural material was tried tonight and I must say that the prosecution was absent and the jury was as fair and competent to judge, as ever tried a case; but, as the discussion progressed the idea dawned upon me that while we have emphasized the value of hydrated lime in its present improved form, we have treated the subject of the addition of hydrated lime to concrete as something new and unknown before this form of lime was manufactured on a commercial scale. It is true that the incorporation of field-slaked lime into concrete would be cumbersome and expensive under modern conditions and we do not recommend it, but slaked lime

was used in concrete in prominent structures years before the manufacture of hydrated lime.

In our own literature I would refer you to Q. A. Gilmore's classic: "Treatise on Lime, Hydraulic Cement and Mortar," especially to section 381 of his book.

On foreign practice my data is limited, but sufficient to prove my statement. The use of lime abroad in conjunction with trass or other puzzolanic materials is well known.

On pages 719-720 of Vol. I of the 1911 edition of "Huette, Des Ingenieurs Taschenbuch" we read that the seawall at the Port of Breman consists of one part trass, one part lime, one part sand and 4-5 parts of gravel. And the concrete used in the construction of the Naval Base in Kiel is composed of one part trass, one part slaked lime and one part sand, and for each cubic meter of this mortar two cubic meters of crushed rock.

Trass is a volcanic rock and is used in the form of powder, in which form it is obtainable on the German market.

Lime has been used in portland cement concrete also.

The concrete in the foundation of the University of Strassburg is composed of one part portland cement, one part (by volume) lime, five parts of sand and nine parts of gravel. This mixture is especially recommended for underground work.

There are also some records which show that lime was used for a similar purpose in England and France.

After this digression into the past and to foreign lands I shall be pleased to comply with Mr. Godfrey's request and cite a few prominent structures, to the concrete of which hydrated lime was added for various reasons: Dam, White Salmon River, Washington, Stone & Webster Engineering Corporation, Engineers, Edwards & Lazell, Consulting Engineers; New Austin Dam, Austin, Texas, Lamar Lyndon, Consulting Engineer, Frank L. Taylor, Resident Engineer; Coke Oven Plant of Seaboard By-Products Coke Co., Bergen Junction, N. J., H. Koppers Co., Pittsburgh, Engineers; Reservoir, Waltham, Mass., Bertram Brewer, City, Sanford E. Thompson, Consulting Engineer; Tunnel, U. S. Government Printing Office, Washington, D. C., Walter R. Metz, Engineer; Two bascule bridges over Miami River, Miami, Fla., Harrington, Howard & Ash, Kansas City, Engi-

neers, Valentine Goddard, Resident Engineer; Stony Brook Sewer, Boston, Mass., Department of Public Works, Engineers; Babcock Street Sewer and retaining wall, Buffalo, N. Y., George H. Norton, City Engineer; Bethlehem Steel Co., Sparrows Point, Md., Dravo Contracting Co., Pittsburgh, Pa.; Forty-two bridges and culverts along Indianapolis & Frankfort R. R., Indiana; (Vandalia Lines) F. T. Hatch, Chief Engineer, H. T. Whitney, Resident Engineer; St. Louis Filtration Plant, St. Louis, Mo., Gurdon G. Black, Engineer in charge; Stockton Street Tunnel, San Francisco, Cal., M. M. O'Shaughnessy, City Engineer; and Twin Peaks Tunnel, San Francisco, Cal., M. M. O'Shaughnessy, City Engineer.

WHEEL CONTACTS ON RAILHEADS

By George H. Barbour*

In my paper on "Broad Rails versus Deep Rails" read and discussed before the April 24, 1917, meeting of this Society and published in its July 1917 "Proceedings," vol. 33, No. 6, I endeavored to show, given the spacings of the crossties and their fastenings, the distances between axles and the loads thereon, that the maximum fiber stresses in the rail are the effects of a combination of vertical, lateral and torsional moments produced by the weights and impulses of said axle loads augmented by the flexure resulting from the heaving and the weaving of the track. Though my deductions may be open to criticism both in degree and amount, they represent the pioneer attempt in this country to present in terms comprehensible to the average engineer, and by "familiar methods of computation," a formal solution of this elusive and intricate problem; and at least provide a tangible method by which the properties of rails of different weights and proportions may be scrutinized and the section moduli of their critical fibers compared.

In view of the information brought out at the April meeting, I consider the folowing revision of my calculations in order:

With a vertical bending moment at the point of maximum stress, under a wheel contact and halfway between a pair of crossties, of 158 409 inch-pounds for standard crossties, 22-inch centers, and of 168 750 inch-pounds for 20-inch crossties, 30-inch centers, and accepting the 8000 pounds on which Messrs. Cushing and Fowler virtually agree as the maximum lateral thrust for normal track in good condition, and considering the rail double spiked with spikes three and one-half inch centers in the former and double fastened with fastenings 13-inch centers in the latter

*Mechanical Engineer, Pittsburgh, Pa.

case, the maximum lateral bending moment becomes

$$\frac{8000\ (22 - 3.5)}{8} = 18\,500 \text{ inch-pounds in the former, and}$$

$$\frac{8000\ (30 - 13)}{8} = 17\,000 \text{ inch-pounds in the latter case;}$$

while the polar moments become, for the

100 lb. A.R.A.-B.,	8000 (3.01 — 0.50)	= 20 080, for the
136 lb. P.R.R. and		
136 lb. squat,	8000 (3.53 — 0.50)	= 24 240, and for the
136 lb. L.V.,	8000 (3.94 — 0.50)	= 27 520 inch-pounds.

If, as stated by Mr. Lindenthal, eight inches is sufficient tamping space between the crossties, 16-inch crossties, 24-inch centers, could be used with the same bearing per square inch on the ballast as the 20-inch ones, 30-inch centers; in which case the vertical bending moment would be 161 280 inch-pounds and the maximum lateral bending moment,

$$\frac{8000\ (24 - 12)}{8} = 12\,000 \text{ inch-pounds.}$$

As I fail to see any reasons for revising my transitory depression factors, the following combined stresses are obtained in the critical fibers of the flanges of the aforesaid rails:

ON STANDARD CROSSTIES, 22-INCH CENTERS

100 lb. A.R.A.-B. $- 1.25 \left(\frac{158\,409}{15.7} + \frac{18\,500}{3.68} + \frac{20\,080}{14.12} + 1400 \times 2.63\right) = 25\,276$

130 lb. P.R.R. $- 1.25 \left(\frac{158\,409}{23.56} + \frac{18\,500}{5.05} + \frac{24\,240}{20.94} + 1400 \times 3.09\right) = 19\,839$

136 lb. L.V. $- 1.25 \left(\frac{158\,409}{28.86} + \frac{18\,500}{5.09} + \frac{27\,520}{23.51} + 1400 \times 3.06\right) = 18\,224$

136 lb. squat Fiber 1 $- 1.25 \left(\frac{158\,409}{27.01} + \frac{18\,500}{5.92} + \frac{24\,240}{21.23} + 1400 \times 2.42\right) = 16\,900$

136 lb. squat Fiber 2 $- 1.25 \left(\frac{158\,409}{24.03} + \frac{18\,500}{7.07} + \frac{24\,240}{22.24} + 1400 \times 2.72\right) = 17\,634$

ON 20-INCH CROSSTIES, 30-INCH CENTERS

100 lb. A.R.A.-B. $= 1.25 \left(\frac{168\,750}{15.7} + \frac{17\,000}{3.68} + \frac{20\,080}{14.12} + 816 \times 2.63\right) = 23\,670$

130 lb. P.R.R. $= 1.25 \left(\frac{168\,750}{23.56} + \frac{17\,000}{5.05} + \frac{24\,240}{20.94} + 816 \times 3.09\right) = 17\,760$

136 lb. L.V. $= 1.25 \left(\frac{168\,750}{28.86} + \frac{17\,000}{5.09} + \frac{27\,520}{23.51} + 816 \times 3.06\right) = 16\,069$

136 lb. squat Fiber 1 $= 1.25 \left(\frac{168\,750}{27.01} + \frac{17\,000}{5.92} + \frac{24\,240}{21.23} + 816 \times 2.42\right) = 15\,296$

136 lb. squat Fiber 2 $= 1.25 \left(\frac{168\,750}{24.03} + \frac{17\,000}{7.07} + \frac{24\,240}{22.24} + 816 \times 2.72\right) = 17\,634$

ON 16-INCH CROSSTIES, 24-INCH CENTERS

100 lb. A.R.A.-B. $= 1.25 \left(\frac{161\,280}{15.7} + \frac{12\,000}{3.68} + \frac{20\,080}{14.12} + 816 \times 2.63\right) = 21\,376$

130 lb. P.R.R. $= 1.25 \left(\frac{161\,280}{23.56} + \frac{12\,000}{5.05} + \frac{24\,240}{20.94} + 816 \times 3.09\right) = 16\,126$

136 lb. L.V. $= 1.25 \left(\frac{161\,280}{28.86} + \frac{12\,000}{5.09} + \frac{27\,520}{23.51} + 816 \times 3.06\right) = 14\,518$

136 lb. squat Fiber 1 $= 1.25 \left(\frac{161\,280}{27.01} + \frac{12\,000}{5.92} + \frac{24\,240}{21.23} + 816 \times 2.42\right) = 13\,894$

136 lb. squat Fiber 2 $= 1.25 \left(\frac{161\,280}{24.03} + \frac{12\,000}{7.07} + \frac{24\,240}{22.24} + 816 \times 2.72\right) = 14\,649$

showing the great advantage of increasing the bearing on the ballast and decreasing the lateral spans between fastenings involved in the use of the 16-inch crossties, 24-inch centers.

For double lateral thrust plus triple transitory depression the comparison of flange stresses is as follows:

On standard crossties, 22-inch centers,

136 lb. L. V. 34 939,

136 lb. squat, fiber 2 ..... 31 788;

on 20-inch crossties, 30-inch centers,

136 lb. L. V. 27 950,

136 lb. squat, fiber 2 ..... 25 840;

and on 16-inch crossties, 24-inch centers,

136 lb. L. V. 25 172,

136 lb. squat, fiber 2 ..... 23 683.

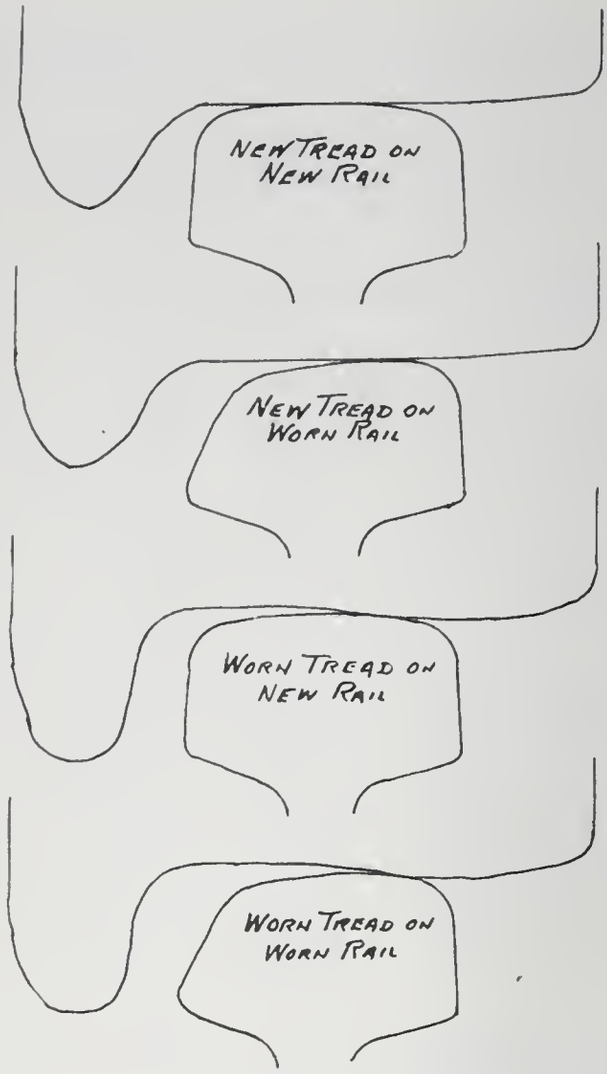

Fig. 1

showing the 136-pound squat rail on its 16-inch crossties, 24-inch centers, to be almost 50 per cent. stronger than the 136-pound Lehigh Valley on its standard crossties, 22-inch centers.

All the above calculations are based on the critical fibers of the rail flange, and my 6¼ by 6¼-inch, 136-pound squat rail was designed with its center of gravity as low as possible with the object of reducing the stresses in the extreme fibers of its flanges to the minimum; but when the thousand and one possibilities of contact between rail and wheel come to be considered (see Fig. 1) with the critical conditions arising from the resultant peening of the railhead, a more complex problem is presented; for no matter what is the coning of the tread of the new wheel or how well it is matched by the radius of the head of the new rail, a slight abrasion of either destroys their conformity, so that all further wear is mutual and accumulative and accompanied by such concentra-

Fig. 2

tions of pressure on contracted areas as to subject the surface of the railhead to serious cold-rolling stresses.

In Europe the rail is usually inclined at an angle of from 1:20 to 1:16, so that its flat head matches the coning of the wheel tread. This is accomplished either by bending the crosstie as shown in Fig. 2 or by inserting wedge-shaped tie-plates. The inclined rail is better able to resist lateral thrusts, but I do not believe such a construction would appeal to the American railway engineer on account of crossing and turn-out difficulties which generally are overcome abroad by placing the rail perpendicularly where they occur. A compound rail with readily replaceable tread member (see Fig. 3-4) would offer a solution of the problem were not the continual undulations of the rail likely to loosen its parts just as splice-bars are loosened. With these eliminated, a broader railhead seems to be the only improvement possible that would appeal to the American engineer; but a broader railhead means a higher center of gravity with increased stresses in the flanges of the rail, so that a proper balance between width of rail-

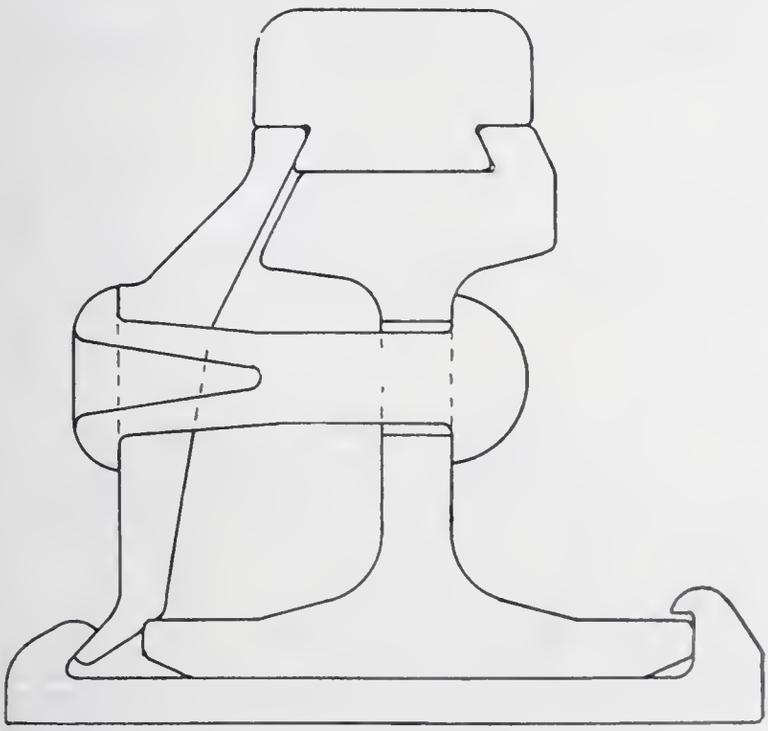

Fig. 3

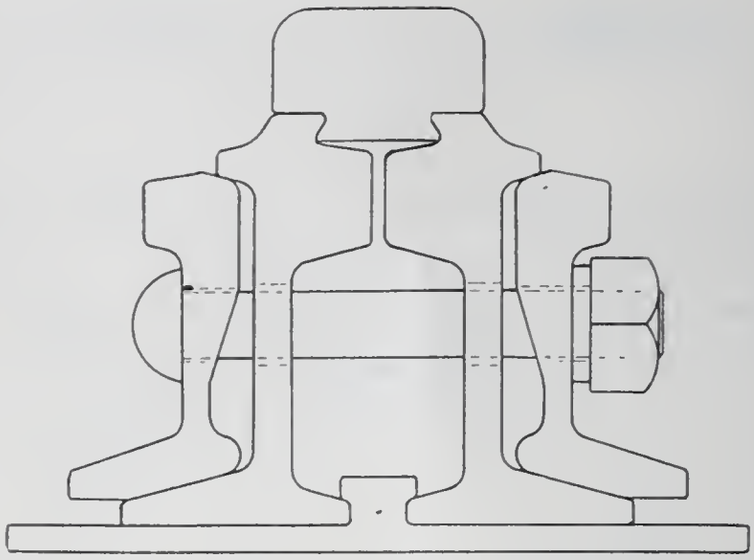

Fig. 4

head and stress in the critical fibers of the rail flange appears to be the crux of the problem.

The distance from base to center of gravity is 43.71 per cent. of its height in the 136-pound Lehigh Valley rail (Fig. 8), and 43.52 per cent. of its height in the 136-pound, 6¼ by 6¼-inch squat rail (Fig. 9), while Fig. 7 illustrates a 136-pound, 6 1/16 by 6 1/16-inch, broad-headed squat rail, in which the distance from base to center of gravity is 46.20 per cent. of its height. The main dimensions of these 136-pound rails are as follows:

	L. V.	6.25 x 6.25	6.06 x 6.06
Height	7.00	6.25	6.0625
Width of flange	6.50	6.25	6.0625
Width of head	2.94	2.94	3.36
Distance from base to c. of g.	3.06	2.72	2.80

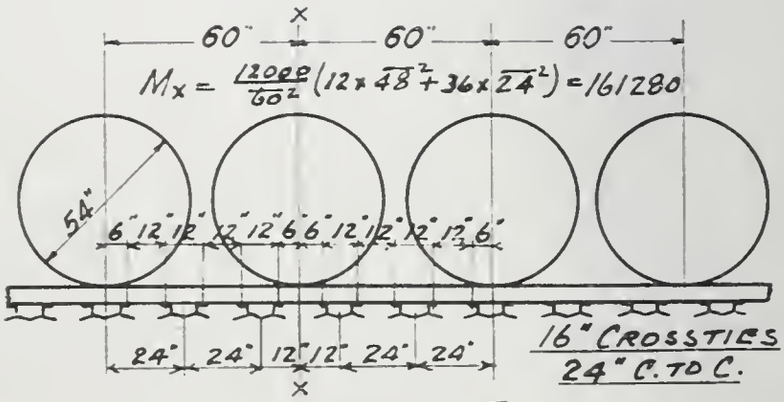

FIGURE 5

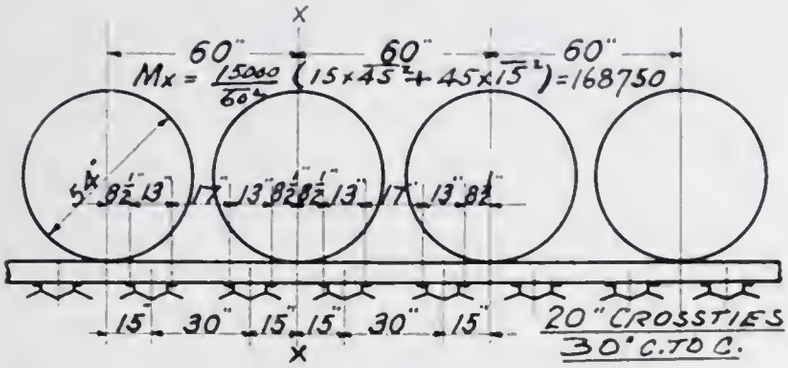

FIGURE 6

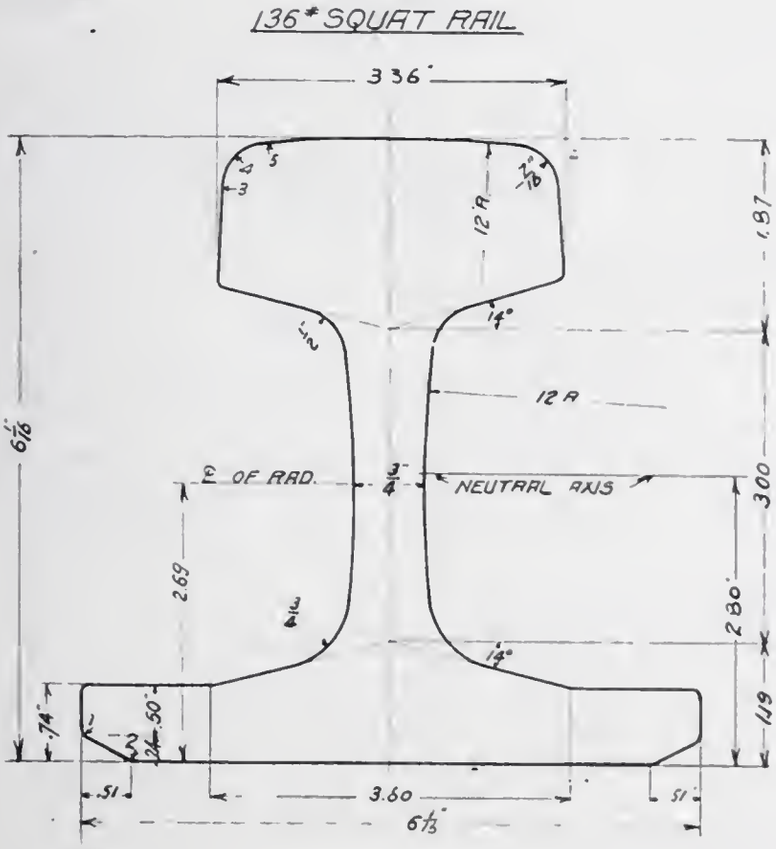

Fig. 7

LEHIGH VALLEY 136# RAIL

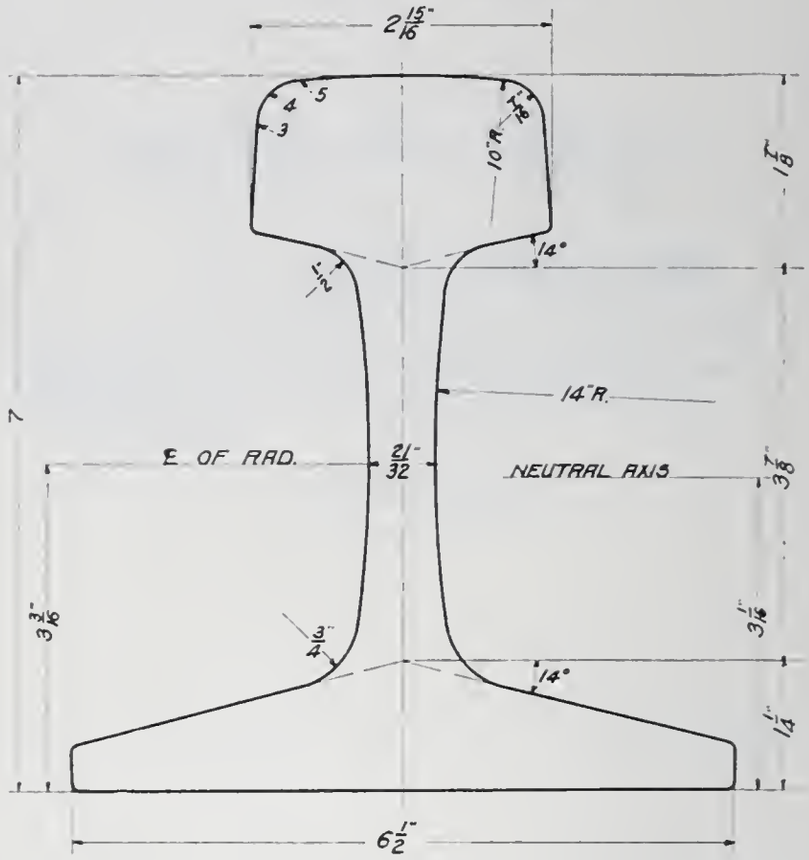

FIGURE 8

136# SQUAT RAIL

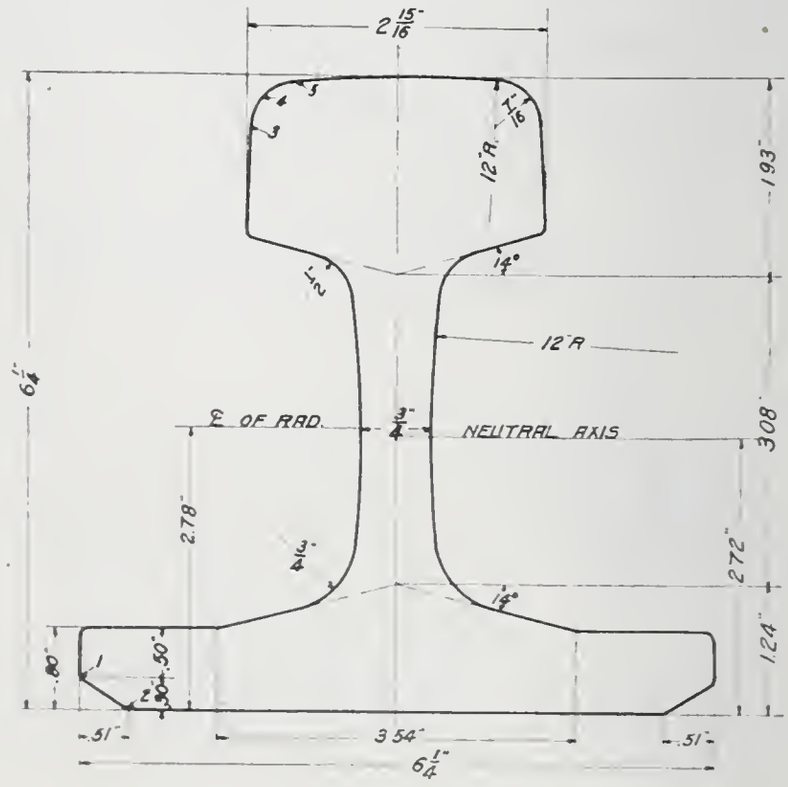

FIGURE 9

With these three 136-pound rails on 16-inch crossties, 24-inch centers, and the balance of the assumptions the same as in the preceding calculations, for the critical fibers, which in the head of the rail is fiber 5 in all three cases and in its flange is fiber 1 for the Lehigh Valley and fiber 2 for the two squat rails, the following stresses are obtained in pounds per square inch:

MAXIMUM FLANGE STRESS

Fiber 1, Lehigh Valley....	$\frac{161\,280}{28.86}$	+	$\frac{12\,000}{5.09}$	+	$\frac{27\,520}{23.51}$	+ 816 × 3.06 =	11 614
Add for double lateral thrust plus triple depression.....	2358	+	1171	+	4994	=	8 523
							20 137
					25 per cent. for impact....		5 034
							25 171
Fiber 2, 6.25 x 6.25.....	$\frac{161\,280}{24.03}$	+	$\frac{12\,000}{7.07}$	+	$\frac{24\,240}{22.24}$	+ 816 × 2.72 =	11 719
Add for double lateral thrust plus triple depression.....	1697	+	1090	+	4440	=	7 227
							18 946
					25 per cent. for impact....		4 737
							23 683
Fiber 2, 6.0625 x 6.0625....	$\frac{161\,280}{22.44}$	+	$\frac{12\,000}{7.00}$	+	$\frac{22\,080}{21.35}$	+ 816 × 2.80 =	12 220
Add for double lateral thrust plus triple depression.....	1714	+	1034	+	4570	=	7 312
							19 538
					25 per cent. for impact....		4 885
							24 423

MAXIMUM STRESS IN HEAD

Fiber 5, Lehigh Valley....	$\frac{161\,280}{22.65}$	+	$\frac{12\,000}{17.06}$	+	$\frac{27\,520}{26.10}$	+ 816 × 3.90 =	12 060
Add for double lateral thrust plus triple depression.....	703	+	1054	+	6364	=	8 121
							20 181
					25 per cent. for impact....		5 045
							25 226
Fiber 5, 6.25 x 6.25.....	$\frac{161\,280}{18.78}$	+	$\frac{12\,000}{19.37}$	+	$\frac{24\,240}{23.23}$	+ 816 × 3.48 =	13 101
Add for double lateral thrust plus triple depression.....	620	+	1043	+	5680	=	7 343
							20 055
					25 per cent. for impact....		5 014
							25 069
Fiber 5, 6.0625 x 6.0625....	$\frac{161\,280}{19.58}$	+	$\frac{12\,000}{14.96}$	+	$\frac{22\,080}{23.54}$	+ 816 × 3.21 =	12 596
Add for double lateral thrust plus triple depression.....	802	+	938	+	5238	=	6 978
							19 574
					25 per cent. for impact....		4 894
							24 468

showing under these assumptions that these rails *when new* have the following stresses per square inch in their critical fibers:

Lehigh Valley,	25 171 in flange,
	25 226 in head.
6¼ by 6¼-inch squat,	23 683 in flange,
	25 069 in head.
6 1/16 by 6 1/16-inch squat,	24 423 in flange,
	24 468 in head.

However, as the railhead wears, the center of gravity of the rail lowers, tending to increase the stresses in the railhead in relation to those in the flange. Hence, would it not be advantageous to further increase the head until the center of gravity is raised to a point where the stresses in head and flange balance at the period of intermediate wear? On the assumption that the average weight of rail used today on main line does not exceed 100 pounds, I would say that the girder strength of the rail should be materially increased and should satisfy the span from wheel to wheel rather than the span from crosstie to crosstie. Note that while the vertical bending moment on the 60-inch span for 22-inch tie spacing is 158 409 inch-pounds, it increases to only 168 750 inch-pounds for the 30-inch tie spacing.

1. The 130 to 136-pound rails recently introduced are none too strong.

2. The lateral strength of the rail should be materially increased, both by increasing its horizontal section modulus and by shortening the distances between crosstie fastenings.

3. In increasing the vertical and lateral strength of the rail, care should be taken that the distances, vertically, laterally, and polar to its critical fibers be maintained at their minimums, so that extraordinary and unavoidable flexures do them the least possible damage. A thin spring will stand more flexure than a thick one.

4. The head of the rail should be broadened to give a greater wearing surface and to provide increased areas of contact with the wheel treads.

5. The center of gravity of the rail should be raised, so that the distances from its center of gravity to the critical fibers of its head be as small as possible; for with said fibers seriously stressed by peening and cold-rolling strains of an opposite nature to those influencing the interior of the railhead, it is desirable to subject them to the lowest possible flexure strains.

6. The wheels of the equipment should be kept in the best possible condition, re-dressed oftener, and the limits on flat spots should be reduced. Wheels can be sent to the shop for turning; nothing can be done to the rails.

7. The bearing of crossties on ballast should be increased and the rail should have more frequent lateral fastenings.

8. The depth of ballast should be maintained at a minimum.

9. In other words, the railhead should be as broad as possible, every means should be employed to reduce the deflection of the rail and every care exercised to maintain the roadbed and equipment as nearly perfect as possible.

DISCUSSION

Mr. N. W. Storer:* I would like to ask Mr. Barbour if he has any accurate, or even approximate, data concerning the life of rails with different wheel loads and wheel diameters. We know that the head of the rail is gradually rolled out in most classes of service; this is, of course, due to overstressing the material at the point of contact between the wheel and the rail. At what point does this begin to be serious, and, with a given wheel load, what is the effect on a rail with different sizes of wheels? How much more serious is the effect of a small wheel with a given load than a large one with the same load?

I have heard some well-known railroad men express the idea that the steam locomotive causes more deterioration of the track than the entire trailing load back of it. The locomotive may injure the track going over it once, so that it has to be straightened up, while the effect of a long train of cars on the track is imper-

*General Engineer, Westinghouse Electric & Manufacturing Company, East Pittsburgh, Pa.

ceptible. This would indicate either that the heavier wheel loads of the locomotive or the unbalanced reciprocating parts are the causes of the rapid destruction of the track. It seems inconceivable that the larger wheel which the locomotive has could cause as serious destruction to the track surface as small wheels, provided the same load were applied.

Mr. Barbour: I will read an explanation which I think is right up to date. Mr. Snyder, quoting Mr. Fowler,† in discussing my previous paper, in the "Proceedings" for July, 1917, makes the following statements:

"The average pressure imposed on the metal of the wheel and rail is within safe limits at low loads, but when a load of 20 000 lb. is reached the elastic limit of the metal is passed and a permanent set appears in the rail.

"The accumulated pressure at the center of the area of contact is excessive at comparatively small loads, and is only prevented from doing injury by the support of the surrounding metal. How far this compression extends into the body of the two pieces of metal in contact is not known but presumably it extends down to the base of the rail and into the hub of the wheel.

"Under a static load the rail yields first, owing, probably, to the fact that the metal of the surface of the head of the rail is not as well supported by the metal below as in the case of the wheel.

"The effect of difference of diameter in wheels carrying the same load is insignificant and is only appreciable when the difference is great. Hence, it is immaterial, so far as stresses on the wheel or rail are concerned, whether small or large wheels, within the limit of practice, are used.

"A hard unyielding cast-iron wheel inflicts more damage on the rail than a steel wheel and the wear of the rail will be greater with the cast-iron wheels than with the steel wheels.

"It is probable that the reason why the damage that would be expected from heavy wheel loads in service does not immediately appear, is that the rail, by bending under the passing wheel, increases the area of contact and thus relieves the surface stresses."

Mr. Storer: Do you feel that that is correct, that there is no difference with different wheel diameters? With the ordinary car wheel, 33 to 36 inches, up to the driver of 72 inches, would there be no difference there?

†Railway Age Gazette, December 20, 1907, p. 752.

Mr. G. W. Snyder:† I do not think the load is the same. Locomotive wheels, even with the same static load, would affect the rail more than car wheels as the car wheels are not counterbalanced and have no rods giving a shock every time the wheel goes around. If a locomotive that is built for a speed of 15 miles an hour runs away and attains a speed of 50 miles an hour, you will find the rail bent downward and outward at every wheel revolution, and that shows the effect of the counterbalance and the effect of the rods which are attached to the locomotive wheels. You have nothing like that with car wheels, so that I do not think there is any doubt that from the same paper loads on the wheels the locomotive wheel would do more damage to the rail than the car wheel. But as I recall at the moment, they do not put 66 000 pounds on a car axle yet.

Mr. Storer: How about an electric locomotive that has no counterweight?

Mr. Snyder: I can not answer that because I have not seen that.

Mr. Storer: I mean no reciprocating moment.

Mr. Snyder: I have prepared some written discussion, if you want it at this time.

Mr. Snyder: Although the commentators upon Mr. Barbour's paper in the July "Proceedings" are unanimous in doubting the practical value of his methods, the warnings have not deterred Mr. Barbour from following the subject on the previous lines.

Mr. Lindenthal says that "the most reliable information as to the sufficiency of strength in rails must be obtained from experience." Mr. Vaughan says that "the splices and rails as recommended by Mr. Barbour are not of practical value." Mr. Fowler says that "it is not altogether safe to depend upon such an analysis when not based upon actual investigation in the field." Dr. Dud-

†Principal Assistant Engineer, Pittsburgh Division, Pennsylvania Railroad.

ley, as represented by Mr. Bronson, says that "Mr. Barbour has not fully understood my statement in reference to the spans of the bending rail by the wheel load spacing, and applied them in his calculations." I take exception to Mr. Barbour's entire method of investigation, for the reason that no application of such a method is likely to give results that are of any value. Mr. Barbour has modified some of his formulae, but has not revised his method by study of the actual facts, and so far as I am able to see, his new calculations, like the old, hardly attain the Duke of Wellington's standard of minimum value. I shall endeavor to state the known facts upon this subject with comments as brief as possible. Mr. Barbour's paper really covers several subjects, each of which might profitably be discussed at greater length than he has devoted to all of them.

On the Pennsylvania Railroad the total number of rail failures in main running tracks reported in the years 1915 and 1916 was 5431. Of these, 1687, or 31 per cent., started in the head of the rail; 1567, or 29 per cent., in the web of the rail; 437, or eight per cent., in the base of the rail; 831, or 15 per cent., were due to transverse fissures, and 900, or 17 per cent., were attributed to miscellaneous causes. It is impossible to say how many of the 437 failures which started in the base arose from stresses in the extreme fibers, but it is certain that only a very small percentage, not exceeding 10 per cent., thus originated. In other words, Mr. Barbour's calculations can apply to only 0.8 of one per cent. of the rail failures on the Pennsylvania Railroad in the two years mentioned. However much it may interest or amuse the lovers of mathematics to compute stresses with the object of improving rail sections, such computations cannot be of much value if they apply to only 0.8 of one per cent. of the total failures, and it is by no means certain that they apply to any of the failures. In short, experience warrants the statement that what Mr. Barbour assumes as the maximum point of stress is not the maximum point of stress at all.

Mr. Barbour gravely misquotes Mr. Lindenthal as stating that "eight inches is sufficient tamping space between crossties." Mr. Lindenthal's actual statement, as set forth in the July "Proceedings," is that he "believes that trackmen want to have a mini-

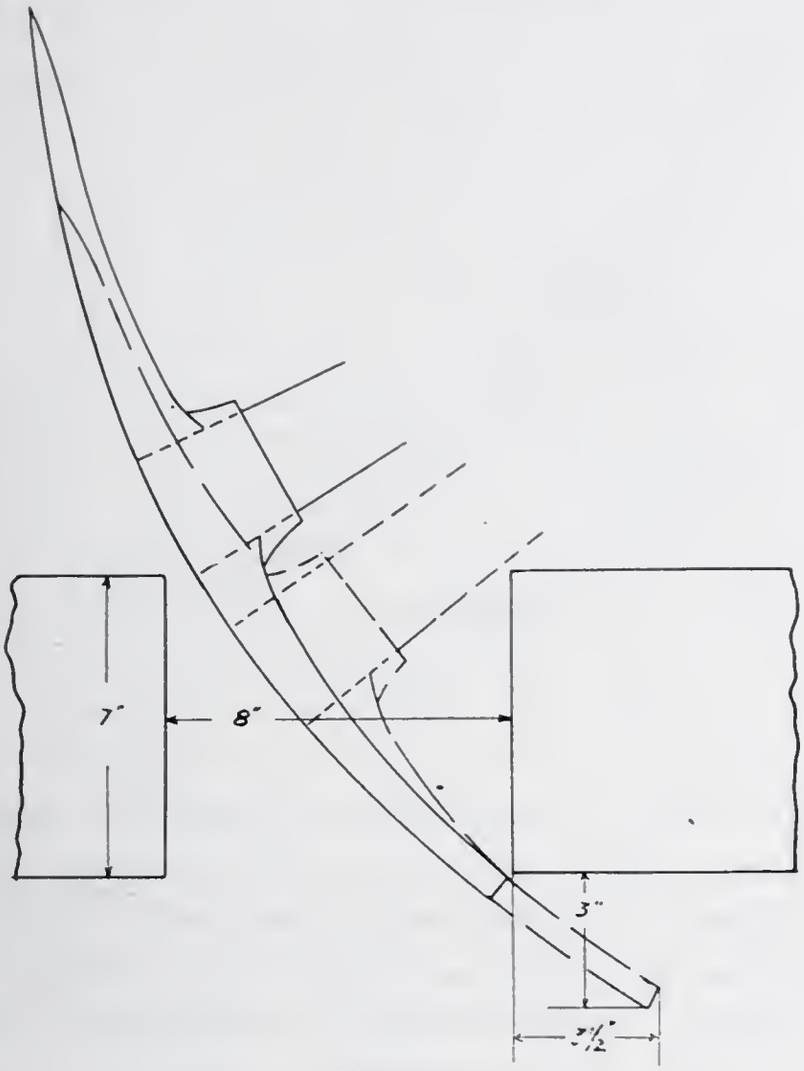

Fig. 12

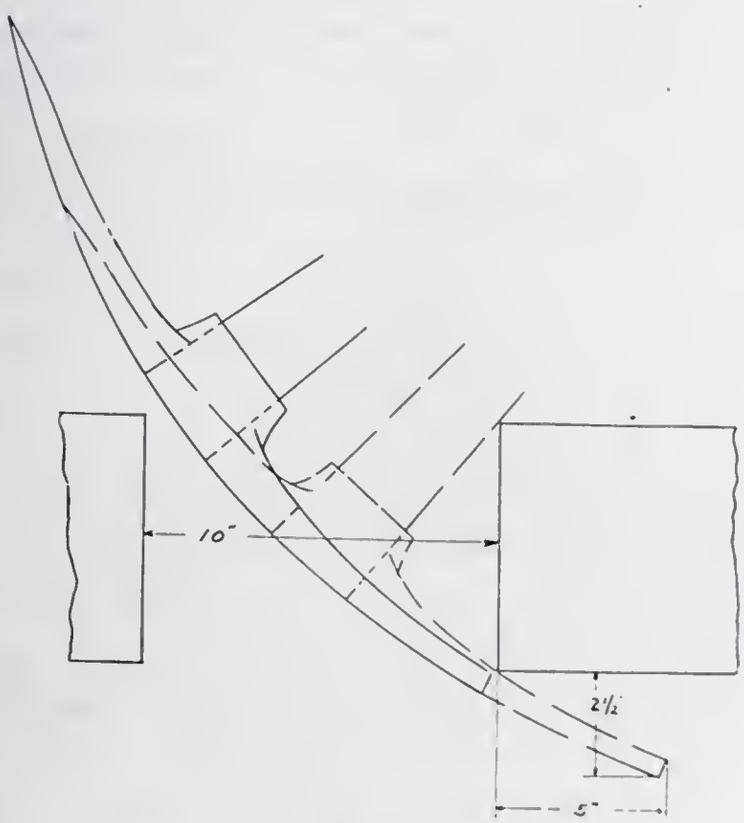

Fig. 13

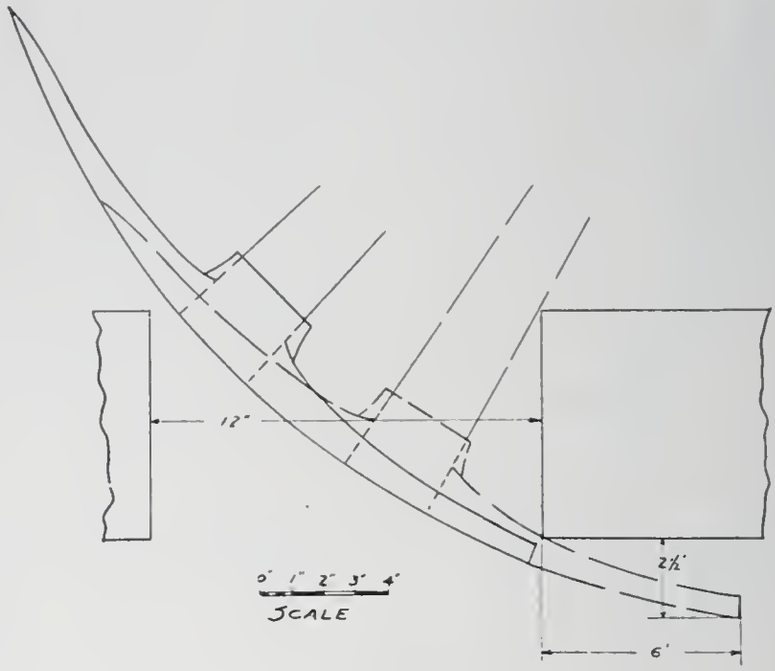

Fig. 14

mum of eight inches." This means, perhaps, that trackmen would not direct two ties eight inches apart to be spread further apart. The reason is not far to seek, and is illustrated in Figs. 12-14. It is quite clear that ties eight inches apart can be tamped for only a very short distance under the edges. In fact, with this spacing ties wider than six inches could not be tamped so as to have any greater effect in supporting the rails than the narrow ones. Mr. Barbour bases a number of calculations upon this spacing, which calculations, of course, are devoid of value. In both this and his previous paper he speaks of ties 16 inches and 20 inches wide. Every trackman knows that the centers of ties more than 12 inches wide cannot be tamped at all, and even if tamping bars or pneumatic tampers were so formed as to make it possible to tamp the centers, it would be so easy for the trackmen to neglect the work that assumptions or computations based upon a uniform bearing of such ties upon the ballast would be of no value.

It is extremely doubtful whether the lateral strength of rails needs any increase, and certainly Mr. Barbour's calculations will have no effect on doubters. The practical effects of lateral stresses upon rails are two, namely: the abrasion of the head by wheel flanges on curves, and the forcing of spikes back into the wood of ties. High carbon content is the obvious remedy for flange wear, but neither of these effects will be reduced by change of rail section.

Mr. Barbour speaks of double spiking rails. This practice has been obsolete for about twenty years and has been succeeded by the general use of tie-plates. The Pennsylvania Railroad standard tie-plate is designed to take three or four railroad spikes and has a shoulder, so that for the rail to move laterally, all of the three or four spikes must be forced through the wood of the tie. Certain experimental data have been published to show that it takes about 15 000 pounds lateral pressure on a railroad spike to begin to destroy the wood fibers behind it. Mr. Fowler's comments upon Mr. Barbour's previous paper indicate that experimentally a maximum lateral thrust of about 10 000 pounds was found. I am not sure that Mr. Fowler intends to say this, but, if it is correct, it seems obvious that three or four railroad spikes in a tie, each spike having an ultimate resistance of 15 000 pounds, would be quite sufficient to counteract it. Furthermore, it is well known from the experience of many years that lateral overturning moment is not at all a cause of rail failures. The moments have had one practical effect in the last twenty years, namely, to design tie-plates so that the greater portion of their area lies outside the rail center, with the idea of obtaining uniform pressure on the tie throughout the area of the tie-plate. The earlier forms of tie-plates lacked this essential, and therefore, under heavy traffic exhibited a tendency to tilt toward the outside of the rail.

Mr. Barbour's squat rail section brings about his suggestion to use rivets rather than bolts in splice-bars (Fig. 11). If I mis-

RIVETED JOINT & FASTENING

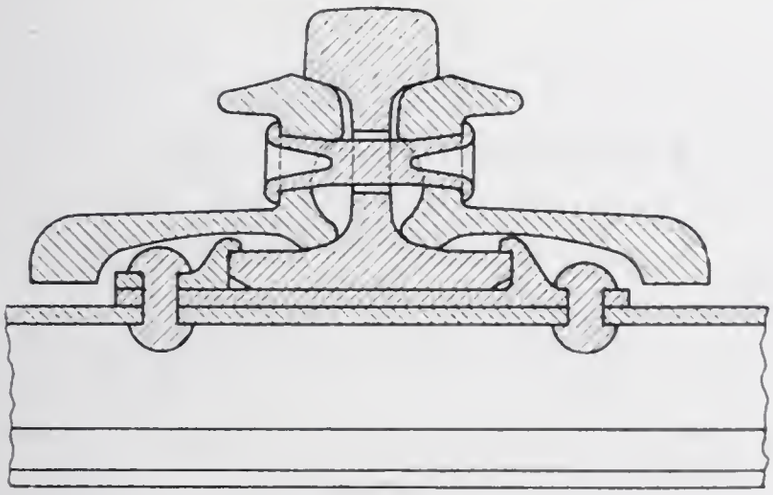

FIGURE 11

take not, his former commentators who alluded to the subject are not favorably impressed with this suggestion. For myself, I think it is absolutely impracticable, until Mr. Barbour, or someone else, devises a method of doing the field work of applying and of removing the rivets by an entirely different method from that to which Mr. Barbour alludes in his previous paper. Extending the discussion of this subject seems futile until some reliable evidence is adduced in favor of the squat rail section.

I should, no doubt, apologize for the length of these comments, but it seems reasonably clear that the questions raised by Mr. Barbour's papers cannot be fully covered except at much greater length. Let me conclude by extremely brief comment upon Mr. Barbour's final statement of principles:

1. It is by no means proved that the girder strength of rail, at least of the Pennsylvania Railroad standard 130 pounds per yard, should be materially increased, although it may be so.

2. There is no evidence deserving the name that the lateral strength of rails needs any increase.

3. Inasmuch as what Mr. Barbour calls "critical fibers" are not, in fact, "critical fibers," this proposition appears to have no value.

4. Mr. Barbour's Fig. 1 shows a railhead apparently two and three-fourths inches wide. It also indicates that the center of contact between a worn tread and a worn rail is located about two and one-half inches from the wheel flange. These data give no reason to suppose that any increase of width above the three-inch standard of the Pennsylvania Railroad 130-pound rail section is necessary or desirable.

5. As the paper does not contain any discussion of this item, I offer no comment upon it. I am inclined to think that the center of gravity of the rail should be raised as suggested.

6. I agree that the wheels of equipment should be kept in better condition.

7. I dissent entirely from this proposition. The weak part of the track is at the joints, and I do not believe that increasing the number of ties, which is the practical method of increasing the bearing of ties upon ballast, will be of any use; in fact, I have serious doubts whether the recent increase from 18 crossties per 33-

foot rail to 20 crossties per 33-foot rail has been anything but a waste of money.

8. Of course, the depth of the ballast should be maintained at the minimum, but it has been pretty clearly brought out that this minimum is two feet underneath the bottom of the crosstie, for the purpose of producing substantially uniform pressure upon the roadbed.

9. The only exception I take to this statement is the use of the word "possible." I suppose it is possible to make railheads four or five inches wide, but I do not believe there would be any use in so doing.

Mr. A. R. Raymer:* Not having had the privilege of seeing this paper before the meeting, my remarks will, of necessity, be general. The subject is one of great interest to all railroad men, and it certainly is encouraging when manufacturers are taking it up as they are at the present time. I appreciate the points that have been made in the paper and also in the discussion.

From my point of view, one of the greatest benefits that will follow the use of rails of greater depth will be that splice-bars can be designed of proper depth to take care of the joints. On that point alone the departure from the shallower rail to the deeper one will fully repay the expense. The cold-rolling will be about the same on the large rails as on the smaller ones, on account of the line of contact being the same in both cases. The creeping of the rails will be reduced on account of the rail section being stiffer. I look for great benefits to follow the use of rails of greater depth and greater stiffness.

Mr. C. M. Eaton:† Although Mr. Snyder considers further discussion useless, I shall venture to refer to the question raised by Mr. N. W. Storer concerning the relative effect of large and small driving wheels upon the rails.

I must take exception to Mr. Barbour's conclusion that the effect of large and small wheels upon the rails is identical, partic-

*Assistant Chief Engineer, Pittsburgh & Lake Erie Railroad, Pittsburgh, Pa.

†Electrical Engineer, Charge Railway Engineering Dept., Westinghouse Electric & Manufacturing Company, East Pittsburgh, Pa.

ularly in certain critical circumstances. Take, for example, the condition that exists at the end of a soft spot in the track. The tendency of a locomotive is to lengthen this spot every time it passes the particular section of track involved. This is due to the large forces transmitted through the rail and tie to the ballast when the locomotive is lifted out of the end of the soft spot onto the normal track. With equal speeds of locomotive advance, the time element required by a large wheel in climbing onto the normal track is greater than that necessary for a small wheel, in approximately the ratio of wheel diameters.

If the weight at the rails be the same in both cases, the static stresses in the rail are evidently greater where the time element involved in performing the lifting operation is smaller. The dynamic stresses in the rail are, on the other hand, increased, due to the greater "dead" or non-spring-supported mass of the larger wheel, but a careful analysis shows a larger total resultant stress in the rail for the small wheel.

This condition becomes most critical in a track structure with insufficient drainage, when the frost is rapidly leaving the ballast. The edge of a bridge shadow will then form a sharp dividing line between hard and soft track, and derailments and rail breakage have been definitely traced to this condition, though it is entirely possible that a larger wheel than was involved might have passed the critical point successfully.

I gave careful attention to the extract from the "Proceedings" as read by Mr. Barbour, and am obliged to refuse to accept it as a reply to the question.

The question involves both increased instantaneous surface pressure upon the rail and increased instantaneous bending moment in the rail.

Mr. Snyder: Mr. Fowler's conclusion was determined experimentally and was to the effect that within the limits of actual diameters of wheels the diameter did not affect the area of contact betwen the wheel and the rail. Now you question whether enough hundreds or thousands of wheels and rails have been examined to warrant that conclusion.

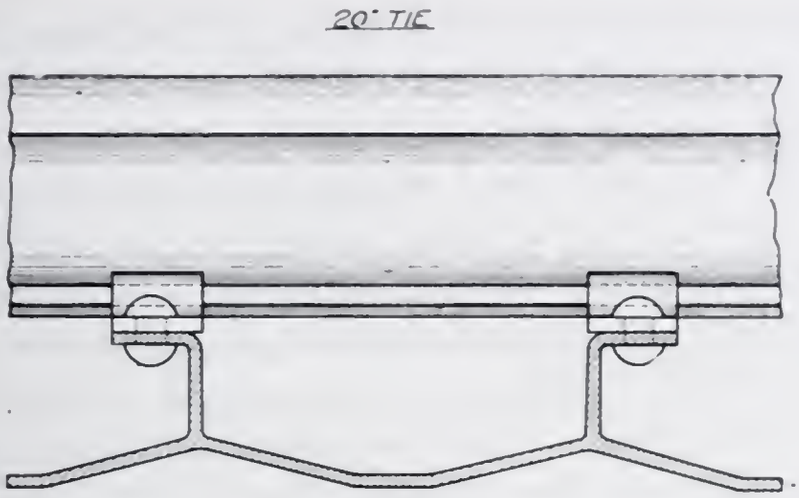

FIGURE 10

Mr. Barbour: What Mr. Eaton means is, would a big wheel climb out of a depression more easily than a small one? There is a hollow there, and would a big wheel climb out more easily than a small one?

Mr. Snyder: Some of my farmer friends say that if you are pulling a car through a muddy field you will pull more load with a big wheel than with a little wheel.

Mr. Eaton: I believe you must have examined that subject from the desk. I do not believe you ever worked on a farm.

Mr. G. W. Vaughan:* Mr. Barbour gives Mr. Lindenthal as authority that eight inches is sufficient tamping space between the crossties. I have had thirty-seven years' experience in the construction and maintenance of track, and I have found that four inches is a sufficient distance to provide tamping space between the crossties; from which you will see that ties with nine-inch face can be spaced 13-inch centers. It is not necessary to use 16 or 20-inch crossties (Fig. 10). If 16 or 20-inch crossties are used they would have to be placed by mechanical means on account of their weight, and they could not be properly tamped unless the work were done by machine. Ties with 16 or 20-inch face would necessarily have to be made of material other than wood, and as no satisfactory tie has yet been designed or invented, such track construction is impracticable at the present time.

*Engineer of Maintenance of Way, New York Central Railroad, New York City.

Mr. Barbour states that in Europe the rail is usually inclined from 1:20 to 1:16. You will also find it is usually inclined in the United States, though not to this extent, but usually about 1:48. In other words, it is inclined so that with cars passing over the rail the car-wheels will have full bearing on the railhead. If the rail is not inclined the wheel does not obtain full bearing and there is always a black streak on the outside of the rail and sometimes one-half the width of the rail. This practice has been followed on every road on which I have been employed for the last thirty-five years, and I have been employed on three trunk lines, so I would assume it was the regular practice.

For further information, I would say that if the rail is not inclined when first laid or placed in the track it is only a short time before the rail has to be turned in, as the weight on the rail tends to turn it out. This inclination is not usually secured by the use of inclined tie-plates or the use of wedges, although inclined tie-plates have been used. It is usually obtained by adzing the ties. This inclination of the rail does not affect the track at frogs and switches.

Mr. Barbour also states that a compound rail with readily replaceable tread would offer a solution of the problem. Rails with sections, shown by Fig. 3 and 4, are absolutely worthless. Such rails will probably stand up under traffic a few days and then go to pieces. Designs similar to these have been tried in the past and rejected. One instance of this is recapped rail, which was rolled and used in 1884 and previous to that time. With these eliminated, he states a broader railhead seems to be the only improvement that would appeal to the American engineer. The broader railhead, in my opinion, does not appeal to the American railroad engineer, for the simple reason that railheads, at the present time, are made about as broad as they should be from a practical standpoint; in fact, on curves the railhead is at present too wide, taking into consideration the condition of the wheels passing over them. On curves, at the present time, the rails are of such width that when the track is properly gaged, allowing for curvature, the outside edge of the wheel tread comes in the center of the rail, and if the wheel be badly worn, forming a double flange on the tread, it tends to split the rail in two in the middle and does mash it down in many cases.

I note further the statement that it is believed to be advantageous to further increase the head until the center of gravity be raised to a point where the stresses in the head and flange balance at the period of intermediate wear. As the rail is not worn out at the period of intermediate wear, I cannot understand what good would result from increasing the depth of the railhead, as the wear on the rail in many instances does not determine its life, since rails with a deep head are generally destroyed at the joint before the rails are worn out.

Mr. Barbour also recommends that the girder strength of the rail should be materially increased and should satisfy the span from wheel to wheel, rather than from crosstie to crosstie. From my experience I find that better track is assured by increasing the number of ties under the rail. I believe the strength of the rail should be increased by increasing its height. The head of the rail should not be broadened to give a greater wearing surface, as the width of the present rails is greater than the width of the wheel tread on curves, and the head of the rail should not be increased in width unless the wheel tread is also increased.

No doubt the wheels of equipment should be kept in the best possible condition and re-dressed often and the track should be maintained to meet the condition of such wheels.

There is no question but what additional crossties could be used to good advantage, and there is no question but what the depth of the ballast should be maintained at a minimum; and everyone will agree with Mr. Barbour's final statement in regard to proper maintenance of roadbed and equipment.

Author's Closure: Paraphrasing the opening remarks of Mr. Snyder when discussing my paper on "Broad Rails versus Deep Rails," men are said to be divisible into two classes—those with progressive and constructive impulses who give a subject long and careful consideration before committing themselves, and those whose obstructive and conservative tendencies lead them to jump at conclusions in opposition to the propositions of the former—and I am afraid Mr. Snyder's remarks place him in the latter category. Take, for example, his censure of my assumption of eight inches as the minimum allowable tamping space between

crossties, whereupon he incontinently dismisses my 16-inch crosstie as not capable of being tamped at all, and hence condemns my calculations as totally devoid of value!

Mr. Lindenthal said in discussing "Broad Rails versus Deep Rails:"

"As to the spacing of steel ties, their closeness will mostly depend upon facility of tamping, for which I believe trackmen want to have a minimum of eight inches."

Mr. Vaughan, Engineer of Maintenance of Way, New York Central Railroad, in discussing the present paper, says:

"I have had thirty-seven years' experience in the construction and maintenance of track and I have found that four inches is a sufficient distance to provide tamping space between the crossties, from which you will see that ties with nine-inch face can be spaced 13-inch centers."

Mr. Snyder's sketch shows that, with standard wooden crossties, the tamping pick can penetrate but three and one-half inches horizontally beneath the base of the crosstie for an eight-inch tamping space (Fig. 12); five inches for a 10-inch tamping space (Fig. 13), and six inches for a 12-inch tamping space (Fig. 14); while my sketch (Fig. 15) proves that the same identical tamping pick could penetrate eight inches horizontally beneath the base of the 16-inch crosstie with an eight-inch tamping space; in fact, its superior adaptability to tamping is self-evident when its slight depth and narrow top are considered. My sketch is ample refutation of Mr. Snyder's strictures and, when its weight of 27 pounds per foot of cross-section or 230 pounds per tie is considered, of Mr. Vaughan's further remarks:

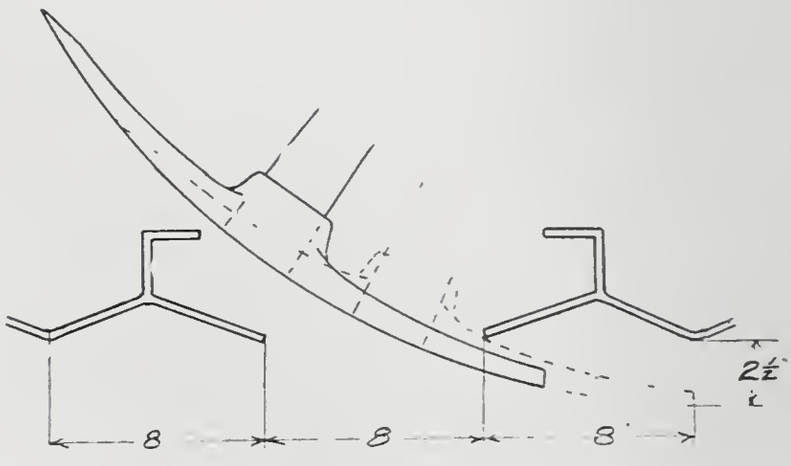

Fig. 15

"If 16 or 20-inch crossties are used they would have to be placed by mechanical means on account of their weight, and they could not be properly tamped unless the work were done by machine. *Ties with 16 or 20-inch face would necessarily have to be made of material other than wood;*"

and why not?

Mr. Snyder quotes Mr. Lindenthal only in part, the complete sentence being as follows:

"While theoretical discussions of this kind are often helpful, the most reliable information as to sufficiency of strength in rails must be obtained from experience,"

which no one will gainsay.

Mr. Fowler's remarks were as follows:

"It gives me great pleasure to contribute what I can to the discussion of Mr. Barbour's able paper on 'Broad Rails versus Deep Rails.' In the matter of the vertical stresses to which he pays more particular attention, I can contribute little or nothing except in the way of inference derived from my investigations of the intensities of lateral stresses. I can make no criticism of his mathematical analyses of those stresses, and my only suggestion would be to the effect that it is not altogether safe to depend upon such analyses when not based upon actual investigations in the field. * * * Mr. Barbour does not, however, jump to unwarranted conclusions, as he bases his calculations upon the work of Dr. P. H. Dudley."

Then, as to Dr. Plimmon H. Dudley. While it is true that there was a misunderstanding as quoted by Mr. Snyder, it was cleared up by the revisions referred to in my closure:

"On account of Dr. Dudley's strictures, I have introduced a paragraph in the body of my paper more clearly defining the basis of my calculations * * * and have added to Fig. 6 a diagram illustrating the specific deflections under the locomotive wheels as recorded by Dr. Dudley. I purposely evaded this phase of the problem in my original paper in the hope that he would elucidate it himself in his own inimitable manner;"

and he surely did. The revised paper and its full discussion were then submitted to Mr. Bronson, Dr. Dudley's assistant, who returned them to the Secretary of the Society with the following statement:

"After reading these remarks [Mr. Barbour's discussion] over carefully, we do not think it will be necessary to make any reply to them, as

he has cleared up very nicely the points in his paper on which we expected to add some discussion."

Now as to Mr. Snyder's manipulation of the P. R. R. rail failure statistics; rail failures for the two years, 1915 and 1916, being tabulated as follows:

"Started in the head of rail	1687, or 31 per cent.;
Started in the web of rail.....	1567, or 19 per cent.;
Started in the base of rail.....	437, or 8 per cent.;
Due to transverse fissures	831, or 15 per cent.;
Due to miscellaneous causes	900, or 17 per cent.;"

from which he makes the startling deduction that but 10 per cent. of the 437 base failures, or 0.8 of one per cent. of the total failures, were influenced by extreme fibers, and in his summing up makes the following statements:

"3. Inasmuch as what Mr. Barbour calls 'critical fibers' are not, in fact, 'critical fibers,' this proposition appears to have no value.

"5. As the paper does not contain any discussion of this item, I offer no comment upon it. I am inclined to think that the center of gravity of the rail should be raised as suggested."

Shades of Shaler Smith and Major Merrill! Are there no extreme fibers in the railhead, and what is my paper about anyhow? Here, indeed, in the P. R. R. rail failure statistics is confirmation of my contention that the flange of the rail has been favored to the detriment of its head, and a convincing argument in favor of raising its center of gravity. What did the P. R. R. itself determine when developing its new heavy section? Experimenting with a 125-pound section, it finally attained the present 130-pound section simply by adding a one-eighth-inch strip on top of the head of the 125-pound one. Here are 1687 (head) plus 831 (transverse fissures), or 46 per cent. of the total rail failures directly traceable to the critical fibers of the head, against 437 or eight per cent. directly traceable to the extreme fibers of the base! And Mr. Snyder's fiat is no more likely to annul the laws of flexure nor to abolish investigation of fibers by section moduli than was Mohammed's to move mountains or King Canute's to detain the tide.

Note the following excerpts from the report, dated February 12, 1917, of the Chief of the Division of Safety, Interstate Commerce Commission, covering the investigation of an accident which occurred on the Galveston, Harrisburg & San Antonio Railway near Iser, Texas, January 31, 1916:

"The development of a transverse fissure presents a type of failure which has the characteristics of a fatigue fracture. A fatigue fracture is one which results from the repetition of loads too great for the steel to long endure. It is a progressive fracture in its usual development, one to which the name 'detail fracture' is often applied. It is gradual in its development chiefly when the loads which cause it are variable. It is a tension fracture, and occurs where the tensile stresses reach a maximum.

In a rail, the greatest tension in the head is along certain interior elements by reason of the initial strains of compression set up at the running surface by the cold-rolling of the wheels. The location of the metal in maximum tension accounts for the interior origin of transverse fissures. Its interior formation is a distinguishing feature over other fatigue fractures where the compression component is not present.

Incipient fissures are found at frequent intervals along the interior elements of the head in rails which have failed in this manner. The same is true in fatigue fractures made in the laboratory. The integrity of the steel is destroyed locally, and fine checks appear on the surface of the bars when they are subjected to direct tension stresses, after failure under repeated loads.

Experimentally, transverse fissures have been made in new rails, where control over their location in the head has been demonstrated. They were located at will, centrally over the web, and on the right side or the left side of the head, according to that on which the load was applied.

Neither chemical analyses nor microscopic examinations have shown a definite cause for the development of transverse fissures. They have occurred in rails of different weights; in those of different 'ingot positions;' in the product of each of the two great methods of steel making, Bessemer and open-hearth; in direct-rolled rails and in those from re-heated blooms; in rails laid on curves and in those on tangent track; over ties and between them; they have made their appearance in the different seasons; they occur where, according to chance, the rail may have been gagged and from the number and proximity of the fissures, where they probably were not gagged; they have displayed themselves singly and independent of other types of rupture, and also associated with shearing fractures or seams which have developed in planes at right angles to the fissures; *they are found in the head and not in the base of* the rail; they appear in rails which show very little wear; they are not confined to any one rail mill, nor to northern or southern mills, nor to to any year's rolling, but have been displayed by rails rolled at periods of time separated by at least two decades. *The latter fact should remove doubts concerning any peculiar*

conditions having found their way into modern mill practice influencing this type of failure.

On the other hand, traffic has increased, wheel loads have increased, and speeds have increased; and transverse fissures are in general found where these conditions are well advanced. The girder strength of the rails has been increased, while the impinging pressures of the wheels still remain without amelioration. It is a disquieting matter that rails of the heavier sections recently laid have displayed transverse fissures. *Mere increase in weight of section has not brought with it immunity from failure in this manner.* It gives emphasis to the need of acquiring further data upon the features which have been discussed in this report.

The conclusion seems well founded that transverse fissures are fatigue fractures, and that they develop in rails which are structurally and chemically free from any known defect. It is a modified type of fatigue fracture in which there is a compressive component in the rail next to the running surface of the head. The presence of this compressive component accounts for the interior origin of the transverse fissure. It constitutes the difference which the introduction of the term 'transverse fissure' was intended to emphasize over the common type of fatigue fracture in which this component is absent, and which in consequence thereof has an interior origin.

The compressive component represents the state of internal strain caused by the cold-rolling of the wheels on top of the head after the rail has reached the track. A preponderance of transverse fissures is on the gauge side of the head, and the side on which the wheels have the greatest effect. Transverse fissures experimentally formed in new rails are located at will on the right side or the left side of the head, or centrally, according to the place where the loads are applied.

The general law enunciated some fifty years ago in respect to the invariable result of repeated stresses in causing rupture in sound steel, and without display of ductility, applies to this type of fracture of rails. To this law there are no exceptions.

The continued use of rails without exact knowledge upon their resistance to repeated alternate stresses, which constitutes their regular function in service, and without exact knowledge upon the magnitude of the track stresses which they daily receive, presents an engineering anomaly which has extended far beyond its proper limits of time. The continued use of steel rails without fundamental information is unjustifiable. Data upon the stresses which rails receive admit of determination only by recourse to track observations. *The form of a rail is such that data are required upon the full rail section in order to satisfactorily determine its resistance to repeated alternate stresses.* Information of this kind would aid in putting rails upon a sounder basis of use, and in conformity with that which should be experienced by steel in all engineering structures.

In conclusion, the direct investigation of the rail which ruptured attaches the cause of its failure to the development of transverse fissures in different parts of its length. Transverse fissures are held to represent a

modified type of fatigue fracture, the formation of which is due to repeated alternate stresses received in the track.

It is a modified type of fatigue fracture by reason of the initial strains introduced in the head of the rail by the cold-rolling action of the wheels of the equipment, causing the metal below the running surface to acquire a state of initial tension, and thus accounting for its interior formation.

Data are needed upon the magnitude of the track stresses, and upon the limit of endurance of rails to such repeated stresses. The magnitude of the loads received and the number of repetitions are factors which determine the life of the rail against fatigue fractures. The satisfactory use of rails requires the determination of this information, with such limitation placed upon the number of repetitions of loads that a proper margin of residual strength shall be maintained,"

and Dr. James E. Howard, engineer-physicist of the Commission's Division of Safety, might have added, *"or with such limitation placed upon the depth or degree of deflection as would allow a greater number of such repetitions,"* for naturally the rail would withstand more alternate deflections of a less degree than of a greater. Hence the advantage of reducing the depth of the transitory depression under the moving equipment by increasing the bearing of the crossties upon the ballast, and of maintaining the depth of the rail at the minimum; for a thin spring will withstand more flexures of the same degree than a thick one.

Dr. Howard and Dr. Dudley have shown that all points on a rail, over the crossties and between them, experience repeated alternate stresses; so the head can not be considered its compression, nor the flange its tension member as in a girder. Both are subjected to the repeated alternate tension and compression, while in addition the head receives continual cold-rolling or peening punishment from the wheel impingements.

While "it is not altogether safe to depend upon such analyses when not based upon actual investigation in the field" my calculations have the support of years of thoughtful research and painstaking experiments by the best talent in the United States. The dead weights upon the wheels of the equipment are known within reasonable limits; dynamic augments as great as 50 per cent. have been recorded; Mr. Fowler has made authoritative records of lateral thrusts under varying conditions; and the investigations of Dr. Howard and the rail failure statistics of the Pennsylvania Railroad, which Mr. Shand, its chief engineer appreciates, for he has written me:

Fig. 16

Fig. 17

"I personally favor sufficiently heavy section of *rail which will give the least amount of deflection,* this rail being sufficiently heavy to permit the use of high carbon,"

both show that the head of the rail is the point of peril. Dr. Dudley has measured the specific depression below the trackmen's surface of the rail under each wheel of the locomotive; and his results are surprisingly close to my assumption of a transitory subsidence in the ratio of one inch to 100 pounds per square inch pressure through the base of the crosstie upon the ballast. The New York Central uses a shallow bed of ballast, and the relation of subsidence to pressure naturally would be greater for a thicker bed of ballast, which probably accounts for the vertical movement of at least an inch observed in the track at East Liberty Station where the ballast bears upon a subgrade of concrete. Note the accompanying sketch where the upper (Fig. 16) represents standard seven by nine-inch wooden crossties, 22-inch centers, on the 24 inches of ballast; and the lower (Fig. 17) represents 16-inch crossties, 24-inch centers, on 18 inches of ballast; and it is self evident that the subsidence would be greater in the former than in the latter, since Dr. Dudley has established that from 75 to 80 per cent. of the subsidence occurs in the ballast, and the remainder in the subgrade.

In his discussion of "Broad Rails versus Deep Rails," Mr. Snyder stated:

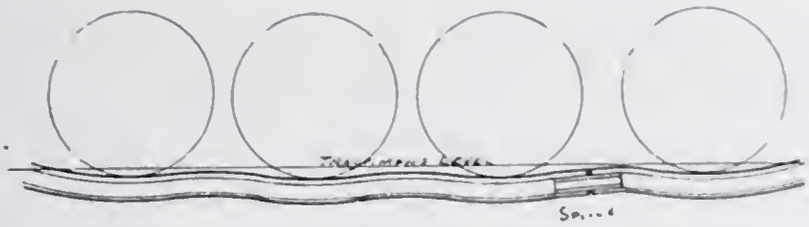

Fig. 18

"On the Pennsylvania Railroad, for example, the data show that of the rail failures for 17 years, aggregating about 60 000 cases, some 42 per cent. occurred within the splice-bars. It is also well known that a very large proportion, approximately 90 per cent. of the rails removed from the Pennsylvania Railroad main line passenger tracks, is removed simply because the ends become battered, making the tracks rough and uncomfortable for passengers. A believer in the inductive method would, therefore, study rail sections primarily with the object of improving the conditions at the joints,"

and in discussing the present paper, he summarizes as follows:

"7. I dissent entirely from this proposition. The weak part of the track is at the joints and I do not believe that increasing the number of ties, which is the practical method of increasing the bearing of ties upon ballast, will be of any use; in fact, I have serious doubts whether the recent increase from 18 crossties per 33-foot rail to 20 crossties per 33-foot rail has been anything but a waste of money.

8. Of course, the depth of the ballast should be maintained at the minimum, but it has been clearly brought out that this minimum is two feet underneath the bottom of the crosstie, for the purpose of producing substantially uniform pressure upon the roadbed."

Let us digest these statements. All rails in constant use eventually fail or wear out and are removed from the track. 90 per cent. of those on the main line passenger tracks of the Pennsylvania Railroad are removed on account of battered ends; in addition, 42 per cent. of the failures, which undoubtedly are com-

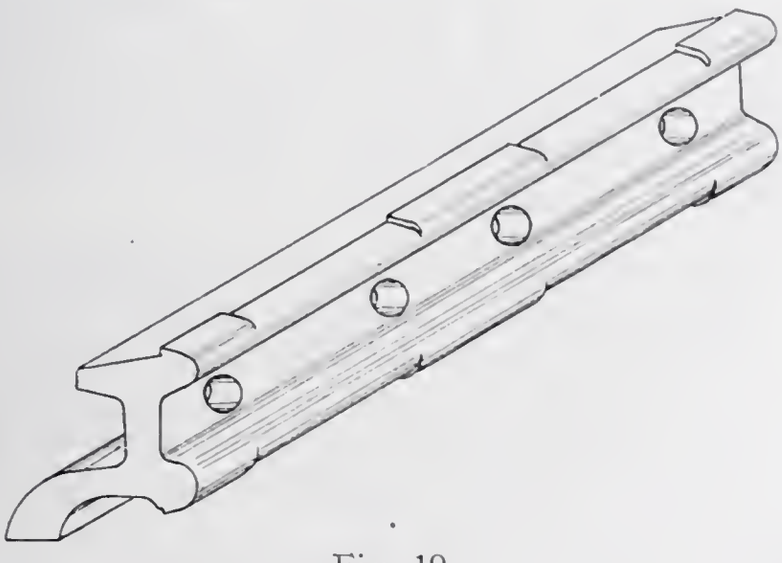

Fig. 19

prised in the remaining 10 per cent. of the total removals, occur within the splice-bars. This defect of track has deeper causes than design or strength of splice-bars. It is the direct result of the repeated alternate vertical deflections to which every inch of rail is subjected in service; for, when the joint is tight, 14 inches, more or less, of the rail end is so rigidly confined that said portion of its length cannot deflect freely (see Fig. 18), and when the joint is loose or bent the adjoining rail ends are out of surface and exposed to the battering action of the impinging wheels of the equipment. In the first case the action is similar to that resulting from holding a portion of wire rigidly in the pliers while bending its free portion back and forth until it ruptures, and where does the wire break? I cannot conceive of any cure for this condition, though it can be ameliorated by increasing the bearing of the crossties upon the ballast and thereby reducing the transitory depression under the moving equipment. Similarly, the wire referred to would stand more bending movements before rupturing were its free portion bent through a smaller arc at each movement.

Fig. 19 illustrates an improved splice-bar under consideration which might improve this condition. Instead of contacting with the rails throughout its entire length, it has but three points of contact with their heads and three with their flanges, leaving the portions between contacts free for vertical deflections.

Reference to Fig. 16 and 17 will help elucidate what Mr. Snyder means when he maintains that 24 inches under the crossties is the minimum depth of ballast to produce uniform bearing upon the subgrade; yet the pyramids shown in Fig. 17 meet much nearer the bases of the crossties than the pyramids of the same side slopes shown in Fig. 16. The Pennsylvania Railroad did not note any particular improvement in adding two ties per rail length, because it had not reduced the depth of ballast in proportion.

Regarding Mr. Vaughan's statements:

"Mr. Barbour states that in Europe the rail is usually inclined from 1:20 to 1:16. You will also find it is usually inclined in the United States, though not to this extent, but usually about 1:48. In other words, it is inclined so that with cars passing over the rail, the car-wheels will have full bearing on the railhead. If the rail is not inclined, the wheel does not obtain full bearing and there is always a black streak on the outside of the rail and sometimes one-half the width of the rail. This practice has been followed on every road on which I have been employed for the

last thirty-five years, and I have been employed on three trunk lines, so I would assume it was the regular practice * * * If the rail is not inclined when first laid or placed in the track, it is only a short time before the rail has to be turned in, as the weight on the rail tends to turn it out. This inclination is not usually secured by the use of inclined tie-plates or the use of wedges, although inclined tie-plates have been used. *It is usually obtained by adzing the ties.*"

and Mr. Snyder's statements:

"It is extremely doubtful whether the lateral strength of rails needs any increase and certainly Mr. Barbour's calculations will have no effect on doubters. The practical effects of lateral stresses upon rails are two, namely: the abrasion of the head by wheel flanges on curves, and *the forcing of spikes back into the wood of ties.* High carbon content is the obvious remedy for flange wear, but neither of these effects will be reduced by change of rail section."

Let me illustrate by sketches the conditions existing at three successive stages in the history of a rail laid on standard wooden crossties without tie-plates:

Fig. 20, showing new rails on a new crosstie,

Fig. 21, the later condition with the rails turned out, and

Fig. 22, the condition after that shown in Fig. 21 has been corrected by the trackmen, who are compelled to adz the crosstie to provide a proper bearing for the rail and who, knowing that the condition illustrated in Fig. 21 will repeat itself all too soon, give the rail a slight inclination inwardly to stave off the evil day. This is the bugbear of the Division Engineer, who naturally objects to such abuse of his crossties.

What makes the rail turn out? Mr. Vaughan says, "the weight on the rail," and Mr. Snyder, in his summary, "2. There is no evidence deserving the name, that the lateral strength of rails needs any increase." Not only the horizontal components resulting from the swaying, lashing and tangential impulses of the equipment, but those resulting from the dead weight on the wheel itself, plus its dynamic augment being applied on the out-

Fig. 20.

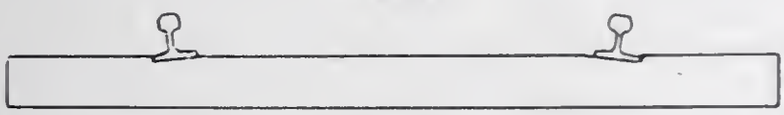

Fig 21.

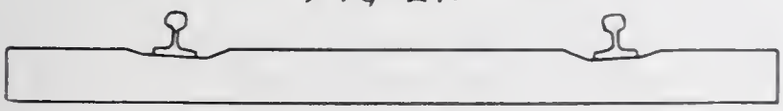

Fig. 22.

side of the railhead (see Fig. 1) cause "the rail to turn out" and "the forcing of spikes back into the wood;" and no better argument for a broader railhead could be presented than the fact *that the black streak occurs on the outside of the railhead,* showing that the contact in general occurs outside the vertical axis of the rail. The direct lateral thrusts being applied at the top of the rail produce a torsional moment whose lever arm is the distance from the top of the rail to its center of gravity, while the lever arm of the torsional moment due to the dead weight on the wheels is the horizontal distance from the axis of the rail to the center of the black streak. Both moments revolve in the same direction, and augmenting the strength of the rail laterally not only increases the horizontal section moduli of its critical fibers, but their torsional section moduli as well.

Here again is evidence in favor of the squat rail, and of one with a high center of gravity, as both features tend to reduce the lever arm of the direct lateral forces as well as the polar distances to the critical fibers of the railhead.

Nothing has been offered that would lead me to withdraw or even modify any of the nine principles or maxims with which I concluded my paper, and I am tempted to add one other:

10. The length of the splice-bar should be reduced to a minimum.

And so let me close with due apologies to John Milton's Lycidas:

Alas! what boots it with incessant care
To tend the homely, slighted, trackman's trade
And strictly meditate the rail's abuse?
Were it not better done as others use
To let the worn and ragged wheels abrade
And frequent flat spots aggravate their wear?
Safety's the spur that the shrewd spirit doth raise
(That last infirmity of modern mind)
To figure nights, and scheme laborious days;
But the solution when we hope to find
And think to benefit the right-of-ways,
Come brash detractors with their scrawny spears
To jostle betterment: "But flexure stays,"
Jervis replied, and touched my burning ears;
"Safety's no plant that grows on rigid track,
Nor in the lack
Of bearing on the ballast. Safety lies ,
Or better, undulates on broader ties."

MODERN CONDENSER PRACTICE

By D. D. Pendleton*

GENERAL

As a number of papers on "modern" condenser practice have been presented before engineering societies during the past few years by various consulting and operating engineers I shall try only to outline the general plan of rating now in force among the various manufacturers, which is based primarily on their own practical experience, coupled with the requirements set forth in specifications issued by consulting engineers.

The types of condensers are surface, jet and barometric. For high duty work, 28-inch vacuum or better, the type of condenser to be selected should be thoroughly studied, taking into consideration the engineering, physical and commercial conditions, and particularly the question of water with respect to:

1. Quantity;
2. Quality (clean, dirty, acid, etc., or suitability for boiler-feed purposes);
3. Pumping head;
4. Source (natural or artificial);
5. Average temperature.

From a consideration of these points may be determined the commercial vacuum which it is practicable to maintain, always bearing in mind that the average log of a properly designed, rated and operated surface condenser will show a better vacuum than a jet machine, and the latter in turn better than a barometric machine, due principally to the conditions as to air leaks, air to be handled by air-pump and exhaust piping losses. The surface machine also enables the condensate to be reclaimed in the shape of pure distilled water for boiler feed, thus requiring only a moderate amount of make-up water to be treated or purchased in cases of unsuitable boiler-feed supply.

*District Sales Manager, Wheeler Condenser and Engineering Company, Pittsburgh.

CHOICE OF CONDENSER

In some localities the choice of type is determined by a practice of long standing, by certain prejudices, or by failure to properly investigate all phases of the situation. Pittsburgh and vicinity had for a long time the "barometric habit," so to speak, this perhaps being due principally to the fact that the manufacturers of mill equipment, who usually furnished complete equipment of engines, condensers, etc., in a great many cases had only the barometric to offer. Later the low type or centrifugal jet condenser appeared and was advocated for the same reason, the surface condenser usually being condemned without a hearing. Now the operating engineers are seriously studying their own problems, and in most cases using the type best suited to their conditions. After considering all the possible conditions which have been mentioned above, and which should apply to each individual case, the choice of a condenser should be made according to the power requirements and operating cost in connection with the existing conditions.

Assume a case of 40 000 pounds of steam per hour, 28-inch vacuum, based on 30-inch barometer, and temperature of water 70 degrees F. The power requirements under these conditions will be as follows:

Surface. The water required for a surface condenser is usually based on 15 degrees difference, and for this case would require 5000 gallons per minute. Since the discharge should be sealed in order to obtain the benefit of the siphon effect, a head of 10 feet should be ample under ordinary circumstances. This would require a water horsepower of 12.5, and with an efficiency of 75 per cent. on the centrifugal pump, a total pumping horsepower of 16.66 would be required.

Using the wet and dry system the air-pump would require approximately six horsepower and the condensate pump about two and one-half horsepower, or a total of approximately 25 horsepower. If a turbo air and condensate pump were used, 40 horsepower would be required, making a total of approximately 56.66 horsepower.

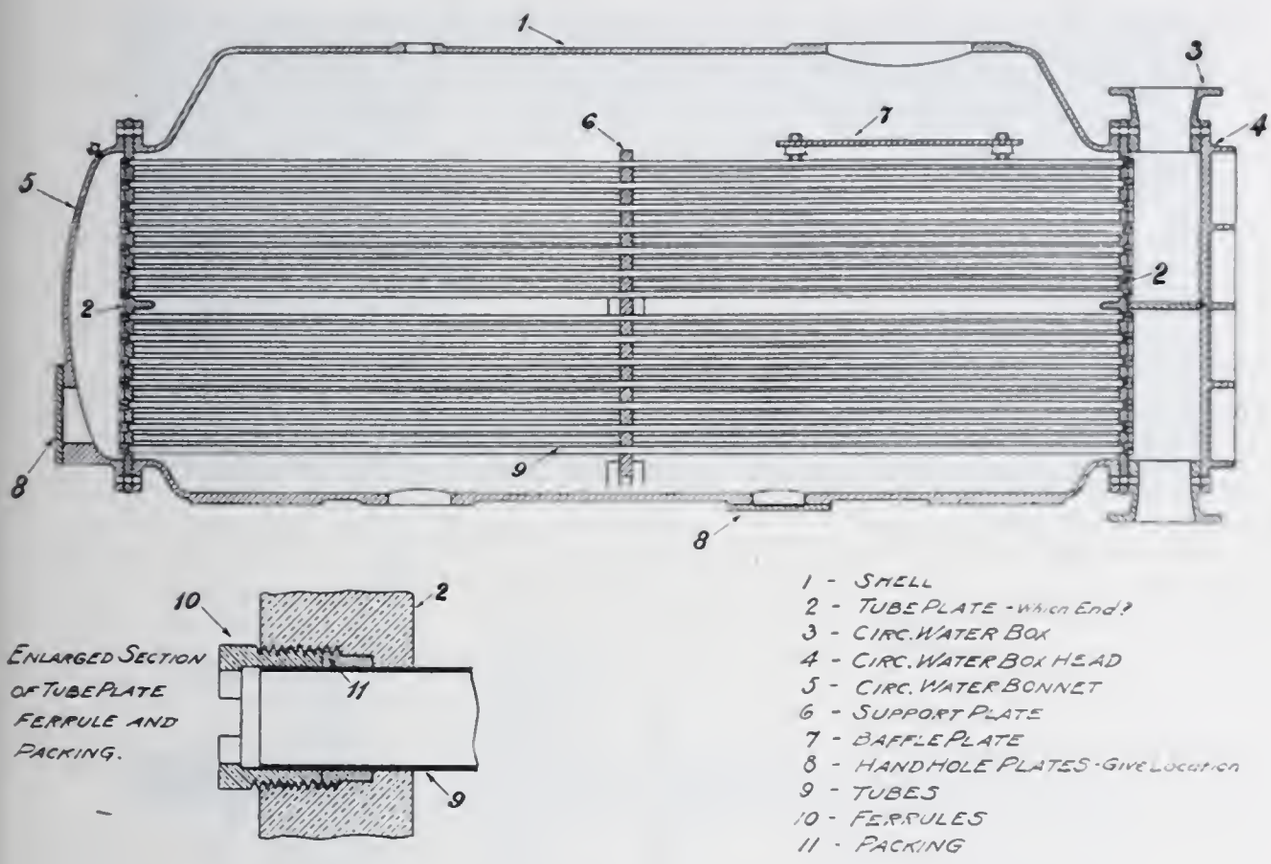

Fig. 4. Surface Condenser, General Arrangement.

Low Type Jet. The water requirements of the low type jet condenser can be figured at a temperature difference of five degrees. This will require less water than the surface condenser, or 3100 gallons per minute. The efficiency of the tail pump or removal pump on any jet condenser should not be figured at more than 50 per cent. In some cases it has been known to go as high as 60 or 65 per cent. This, however, is extreme. A total pumping head of 36 feet is usually figured, this being the discharge head from the condenser, plus friction at the tail pump nozzle, which in this case would require approximately 27.9 water horsepower. At 50 per cent. efficiency a total of 55.8 horsepower would be required for the removal pump alone.

The direct-acting, reciprocating air-pump would be twice as large as for the surface condenser and would require, say, 12 horsepower, making a total of 68 horsepower for the jet system. If a turbo air-pump were used, 55 horsepower would be required, instead of 12 for the reciprocating pump, making a total of 111 horsepower.

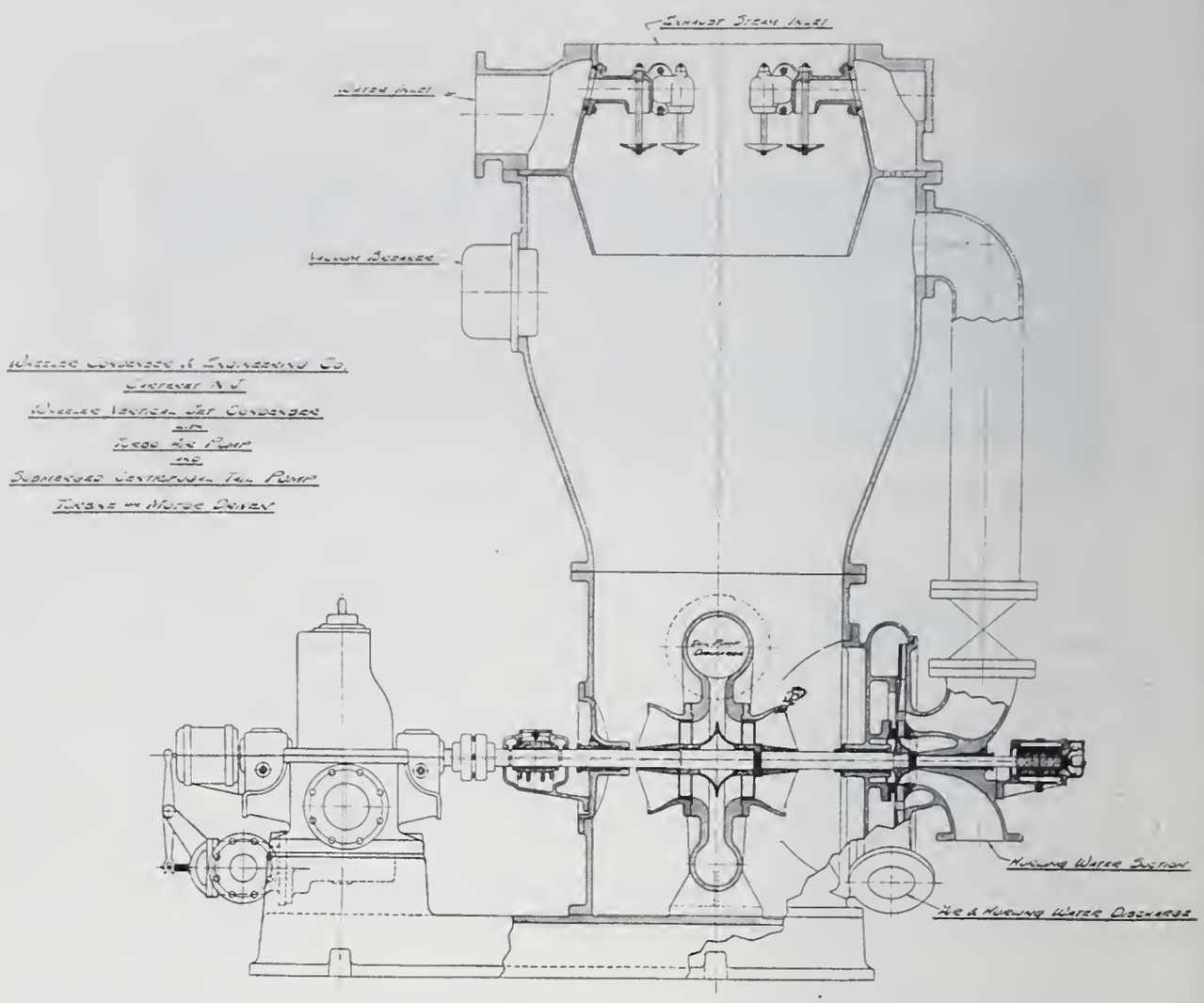

Fig. 10. Section Showing Low-Head Jet Condenser with Turbine-Driven Internal Submerged Tail Pump and Turbo Air-Pump.

Barometric. The barometric condenser will require the same amount of water as the jet type, but the water may be lifted to the condenser head against the total static head, from which may be subtracted the suction effect of the vacuum. With the source of the water at approximately the same level as the hot-well discharge the net head on the barometric can be considered at 30 feet, making a total of 23.25 water horsepower. The efficiency of the supply pump should be at least 70 per cent., making a total of 33 horsepower for same. The air-pump being the same as for the jet, namely, 12 horsepower for the reciprocating, direct-acting pump and 55 horsepower for the turbo air-pump, would make the totals 45 and 88 horsepower, respectively. The steam-jet in place of the above-mentioned air-pump would materially increase the air removal power requirements.

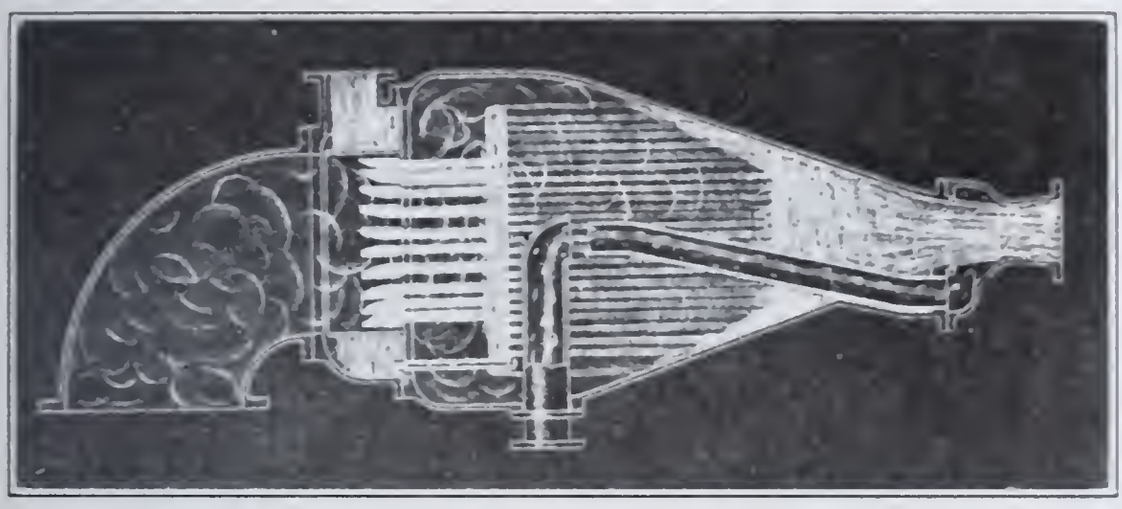

Fig. 13. Barometric Ejector Condenser Head—Details.

From these cases we have:

1. *Surface:* 25 horsepower with direct-acting, reciprocating air-pump and centrifugal hot-well pump; or 57 horsepower with the turbo air-pump.
2. *Barometric:* 45 horsepower using direct-acting, reciprocating air-pump; or 88 horsepower with turbo air-pump.
3. *Low Type Jet:* 68 horsepower using direct-acting, reciprocating air-pump; or 111 horsepower using the turbo air-pump.

LIMITATIONS AS TO TYPES

There is no limit to the size of surface equipments—they are now being made in sizes from 100 square feet up to 70 000 square feet.

The barometric is quite limited owing to the expensive and almost impossible exhaust piping for large units.

The low level jet is also quite limited as to size, this being due to the removal or tail-pump and air-pump limitations and the power for driving the same. The practical limit for these two types seems to be 7500 to 10 000 kilowatts, although there have been installed in certain cases twin jets on machines up to 45 000 kilowatts. This was not through any engineering or practical condition, but principally a matter of personal preference busi-

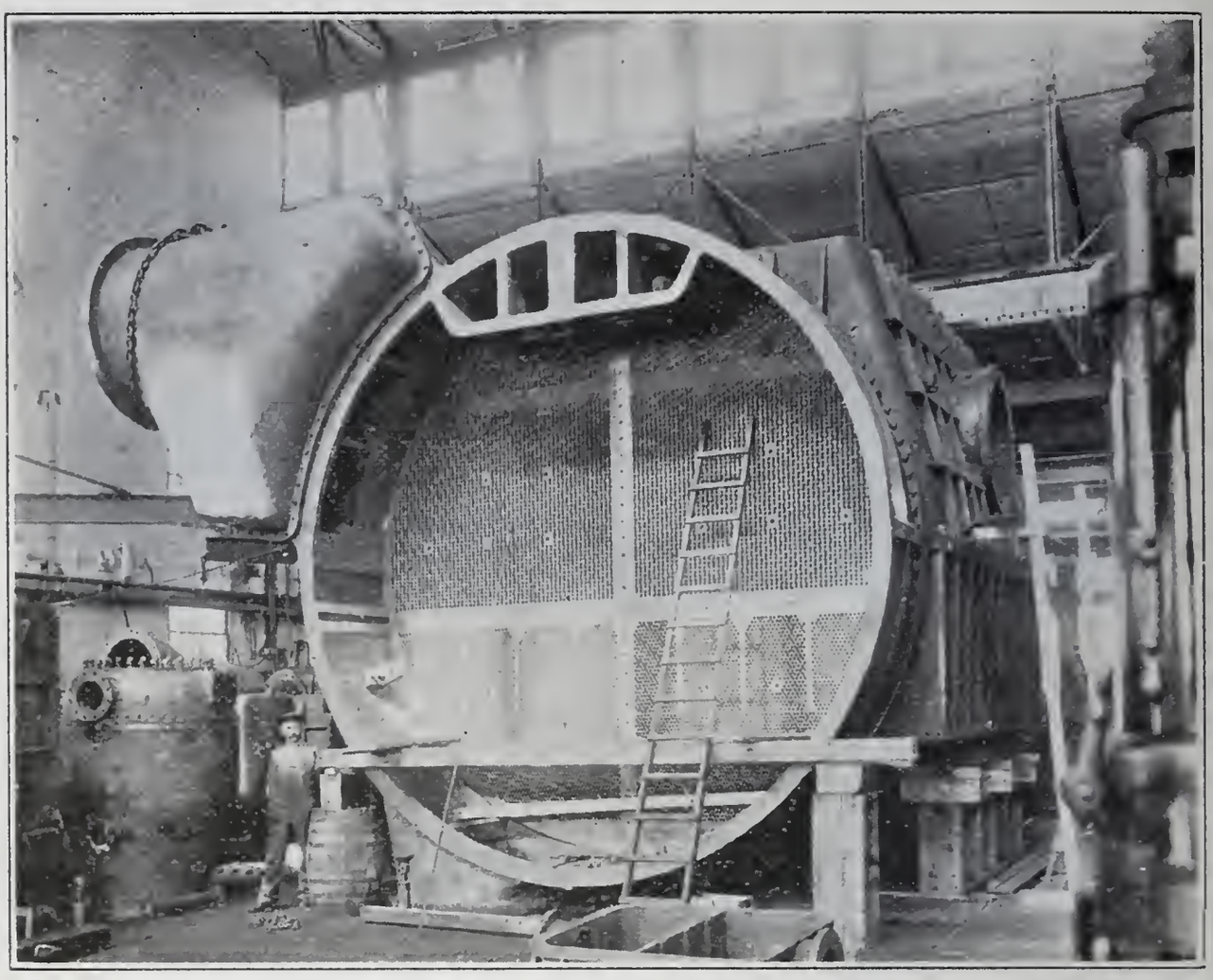

Fig. 8. 50 000 Sq. Ft. Surface Condenser, Showing Water Outlet Nozzle, Tube Plate and Four-Pass Internal Heater.

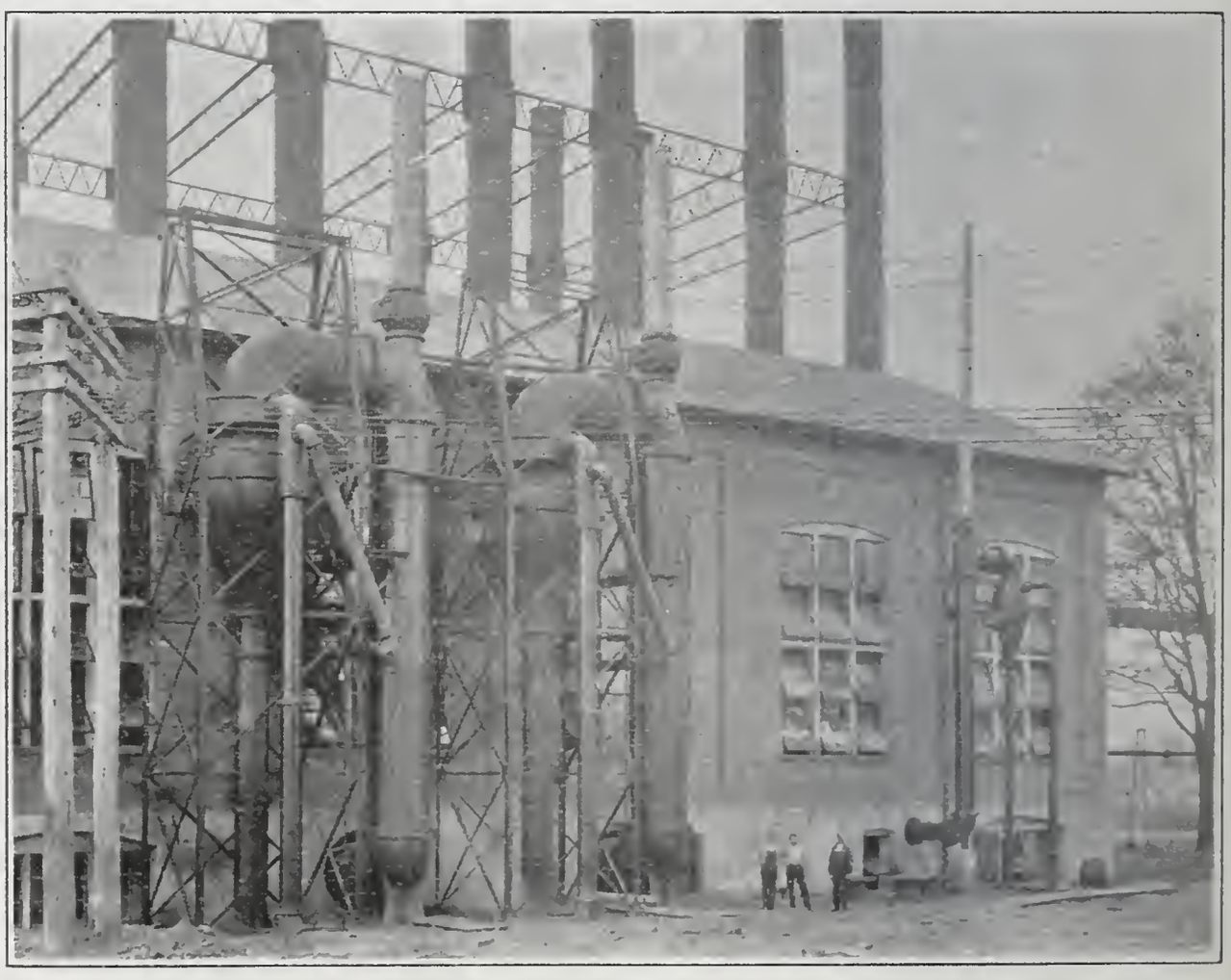

Fig. 14. 2—4000 Kw. Barometric Ejector Condensers.
1— 500 Kw. Barometric Ejector Condenser.

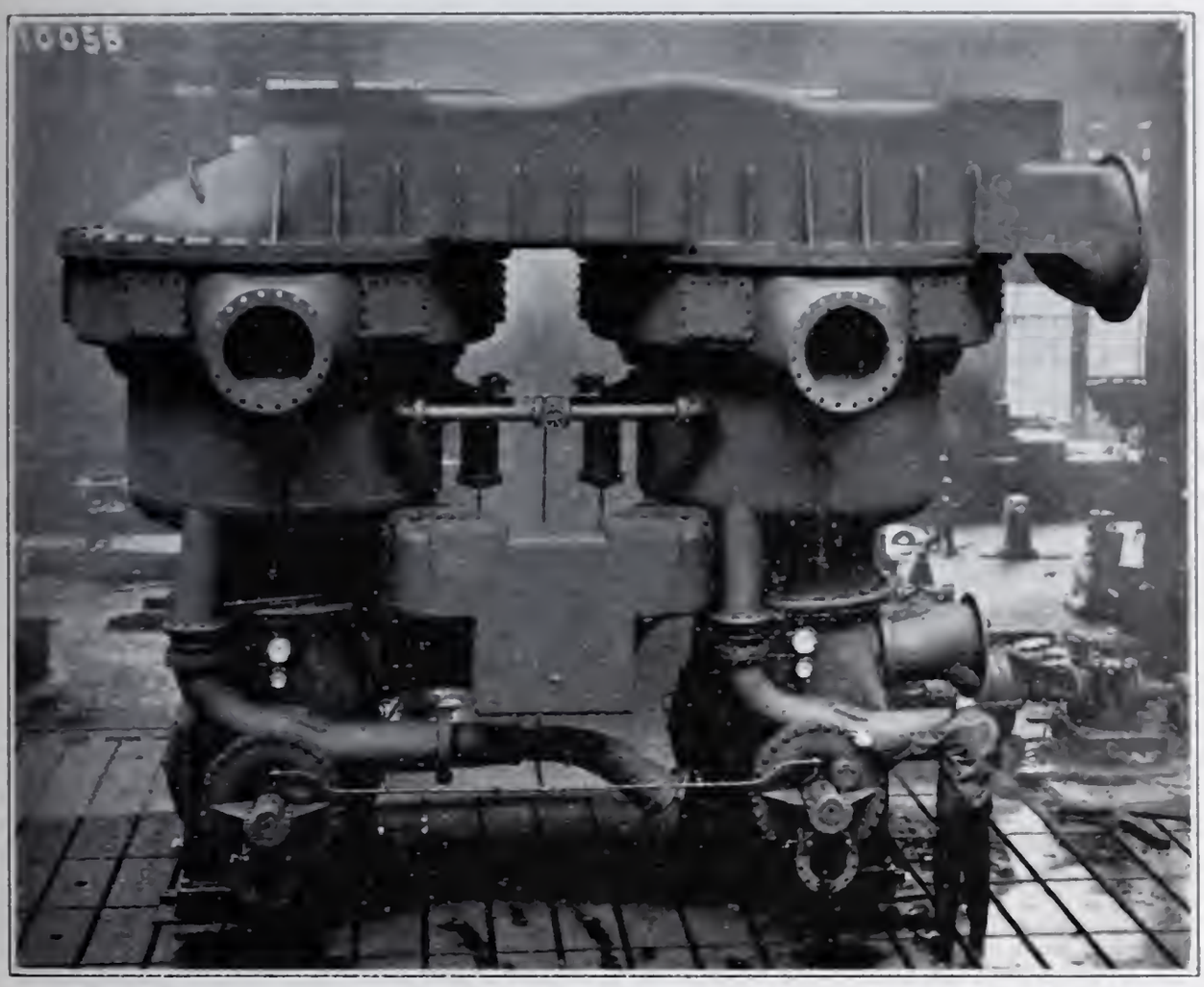

Fig. 12. Twin Low-Head Jet Condenser for 20 000 Kw. Turbine, Twin Tail Pumps and Twin Air-Pumps.

ness policy, or possibly of first cost, certainly not from an engineering standpoint.

For instance, a 20 000 kw. turbine at 12.5 pounds per kw.-hour, or 250 000 pounds of steam, would require at 15 degrees difference for surface work 31 250 gallons of water per minute at 70 degree water and 28-inch vacuum, against a 10-foot head. This would require approximately 100 horsepower.

The air and condensate pump of the hydraulic type requires 140 horsepower additional, or a total of 240 horsepower with one set of auxiliaries only. These can be duplicated, using one set as spare auxiliary equipment. If the wet and dry system be used the air-pump and condensate pump would only require 56 horsepower, making a total of 156 horsepower.

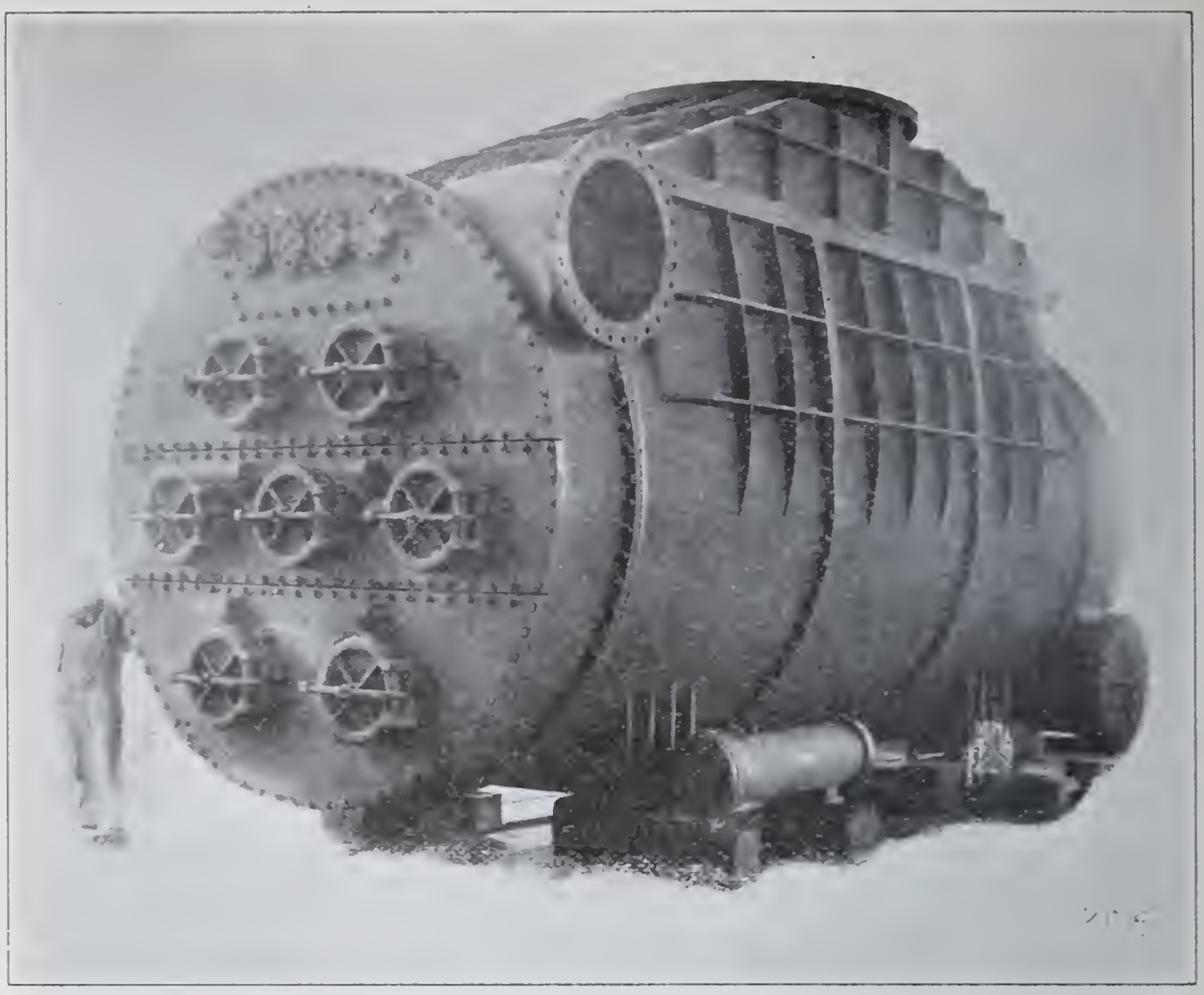

Fig. 5. 25 000 Sq. Ft. Surface Condenser, Three-Pass Type for 5-Degree Difference for Use with Cooling Tower. 100 Sq. Ft. Standard Surface Condenser.

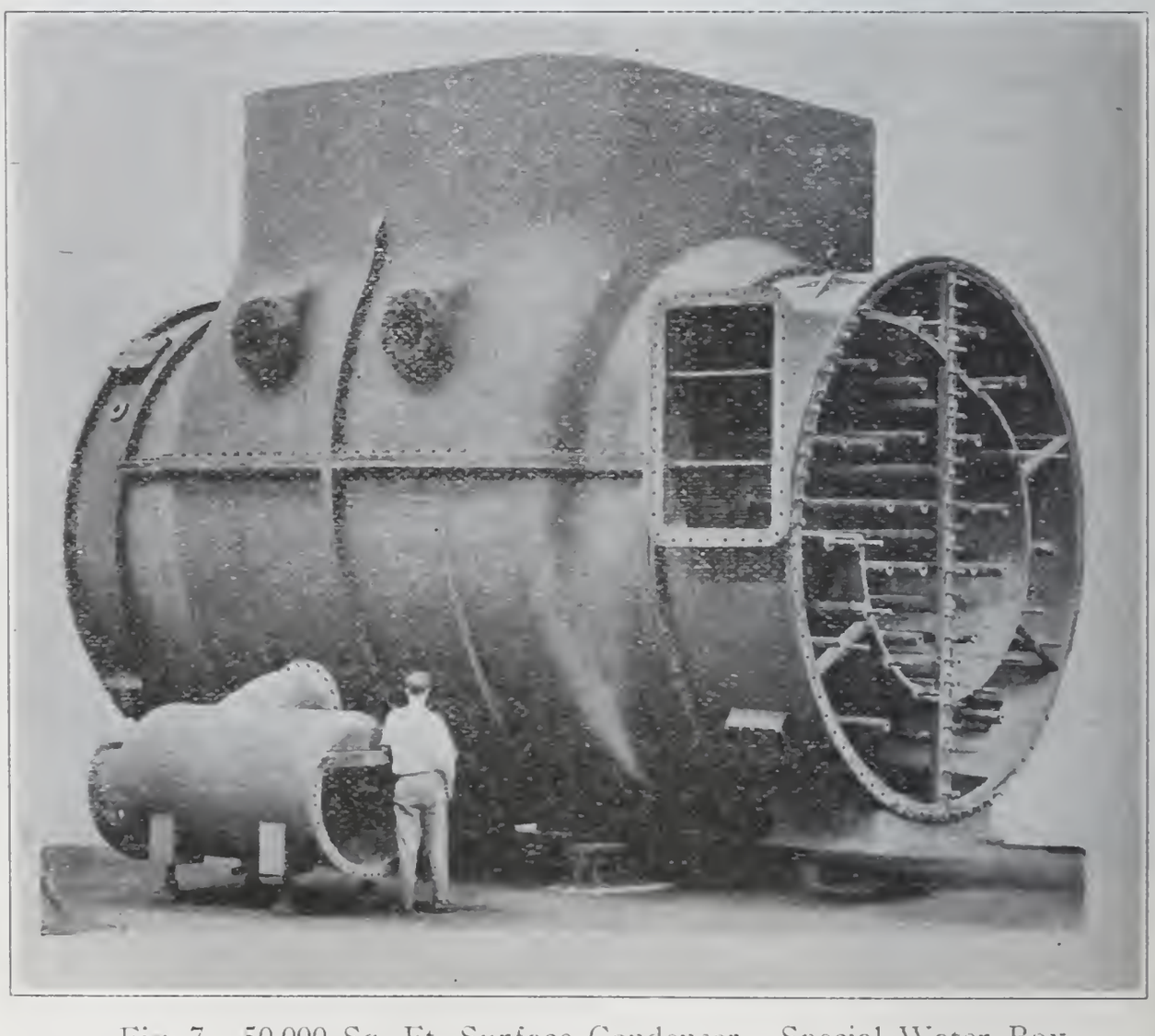

Fig. 7. 50 000 Sq. Ft. Surface Condenser. Special Water Box. 500 Sq. Ft. Surface Condenser.

Fig. 9. Low-Head Jet Condenser with Turbine-Driven Internal Tail Pump and Turbo Air-Pump.

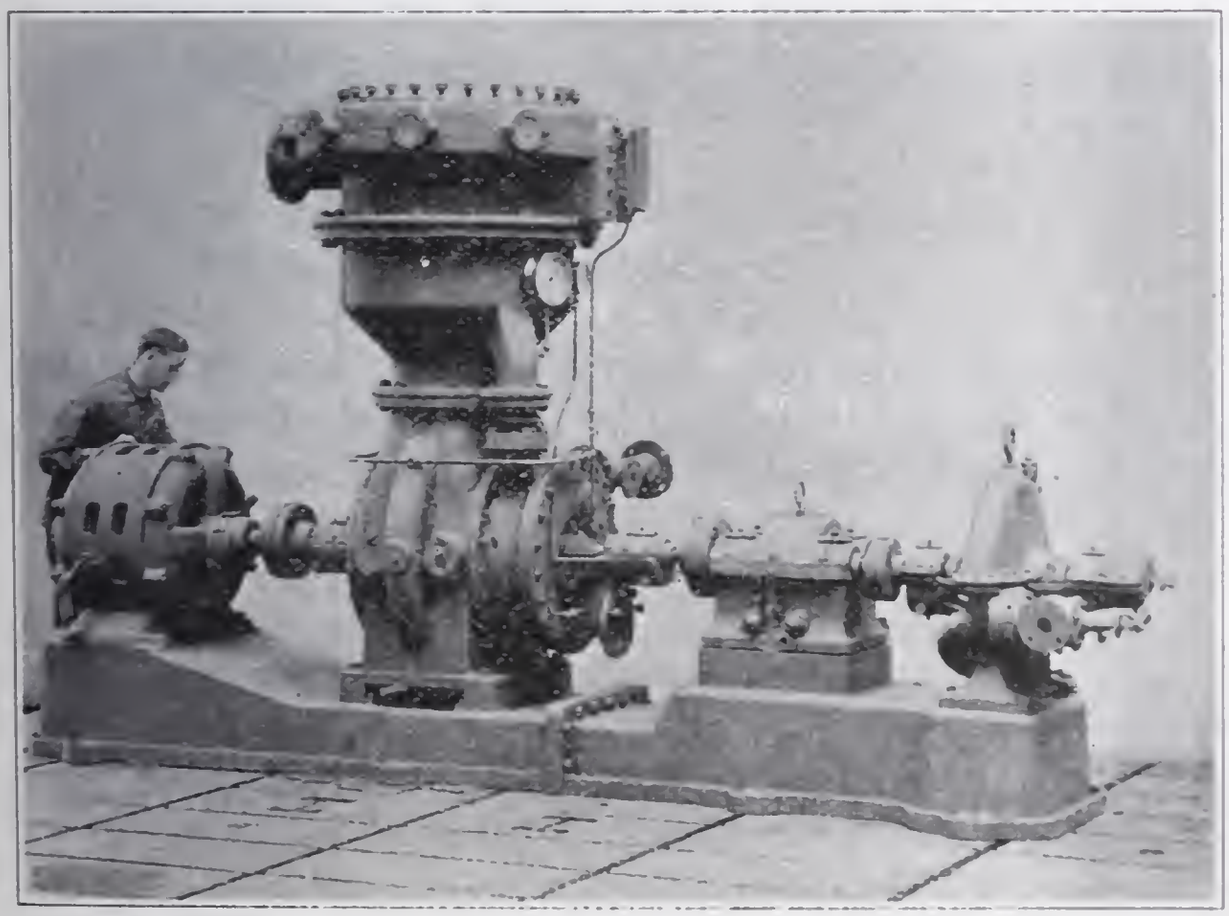

Fig. 11. Low-Head Jet Condenser with Combination Turbine and Motor-Driven Auxiliaries.

The jet at a 5-degree difference would require 20 000 gallons of water per minute against a 40-foot head if no booster pump were required, or approximately 400 horsepower. The air-pump would require about 250 more, making a total of 650 horse-power.

The auxiliaries would have to be in pairs, with no possibility of having spares in reserve. There is no single dry vacuum pump manufactured large enough for this service.

The development of the steam turbine during the past few years has been so rapid and the vacuum requirements by the manufacturers so severe in order for them to make certain guarantees as to economies, that little thought has been given to the condenser requirements in order to obtain this specified vacuum. For this high duty, which is required in most cases, a definite hardship as to first cost and operating cost of the condenser has been placed upon the purchaser, and it is in most cases doubtful if the overall efficiency will justify this extra cost.

It should also be borne in mind that a turbine should be specially designed as to the low pressure blading, so as to handle without undue throttling the enormous volumes of steam due to high vacuum. If not so designed a back pressure is set up in the low pressure stages, thus defeating the results even though the condenser be designed for that specific duty. The failure to maintain specified overall duty is in most cases blamed on the condenser.

AUXILIARIES

After fixing the type of condenser to be used the next step should be a study of the auxiliaries for the equipment. These can be divided into two kinds:

1. Motor-driven;
2. Steam-turbine or engine-driven.

1. It is very easy to analyze the power requirements of the motor-driven air-pump, circulating pump, hot-well pump, etc., power being taken from the switchboard and representing power not available for sale or other use.

Fig. 6. Surface Condenser for 20 000 Kw. Double-Flow Turbine. Special Water Box for Reversing Direction of Circulating Water.

2. The steam-turbine or engine drive, however, brings up the question of the return of heat to the feed-water, or heat balance, which often so complicates matters that we lose sight of the true power consumed. Roughly, 90 per cent. of the steam heat of the auxiliaries will be returned as heat to the feed-water, provided there is enough water of a suitable temperature to absorb this heat. The amount of feed-water available for absorbing this heat varies with the load of the main unit. The result is that at times of light load there is a grave danger of showing an excess of exhaust steam. This militates to some extent against the use of steam-driven auxiliaries, and has led to the development of combined drives using turbines and motors. Another feature to be taken into consideration is the growing use of economizers in connection with the boilers; the colder the water the more work being done by the economizers. This also emphasizes the desirability of avoiding an excessive amount of exhaust steam. It should also be pointed out that the above conditions have resulted

in more attention to the economy of auxiliary turbines, which in turn has resulted in the use of high-speed turbines with reduction gears.

AIR-PUMPS

Air-pumps are divided into several classes, as follows:

1. The old type direct-acting wet pump, being usually a standard steam-driven pump, sometimes of the suction valveless type. This cannot go above a 26-inch vacuum.

2. The rotative or flywheel direct-acting wet pump, such as the Edwards, Mullen, etc. There are also some well-known types of rotary pumps. All these have their qualifications, but only for a vacuum of less than 28.5 inches under any conditions, and they are quite limited in size and capacity, not being practicable for over 40 000 pounds of steam per hour with a 28-inch vacuum. These are rarely used except for surface work.

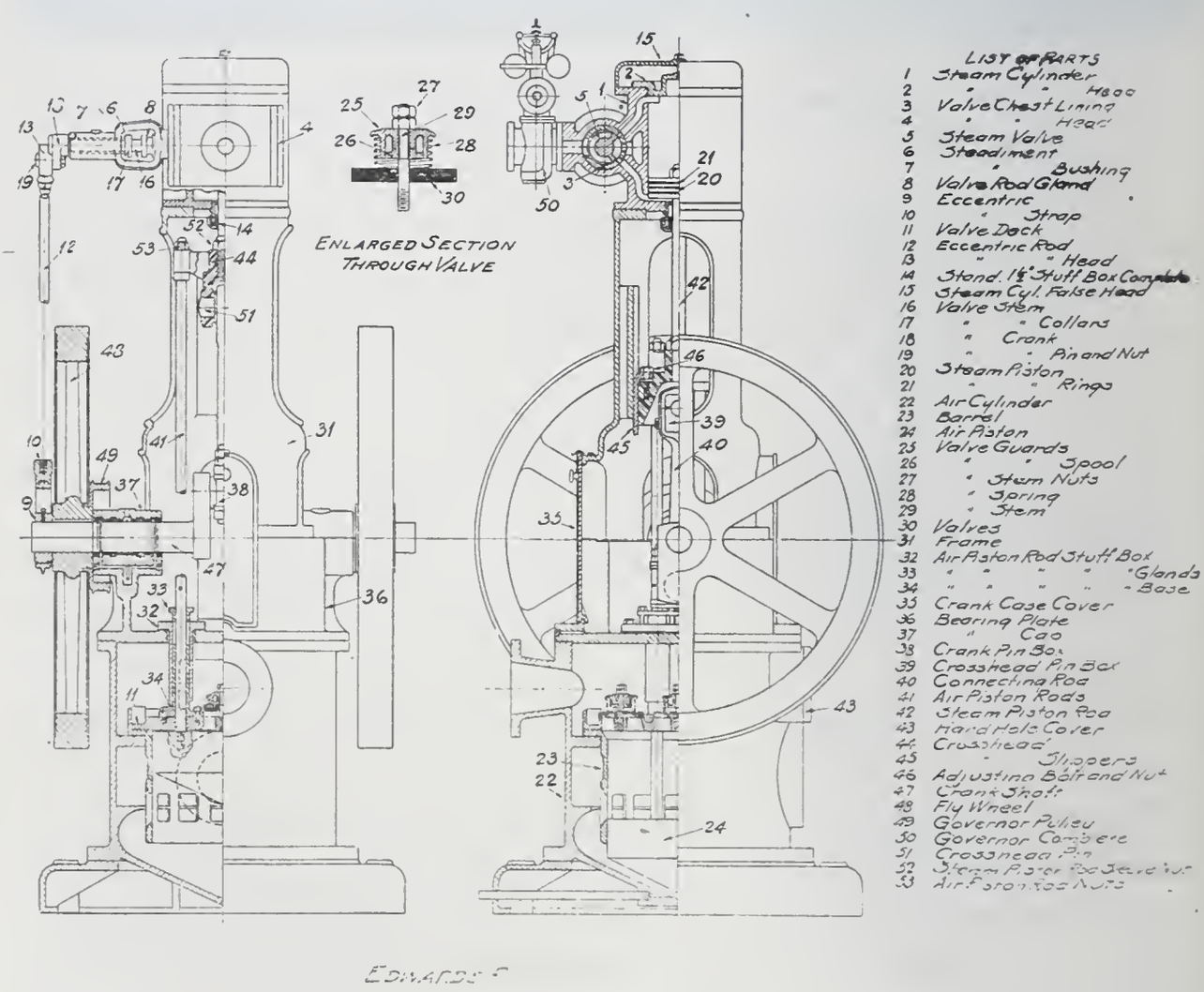

Fig. 15.

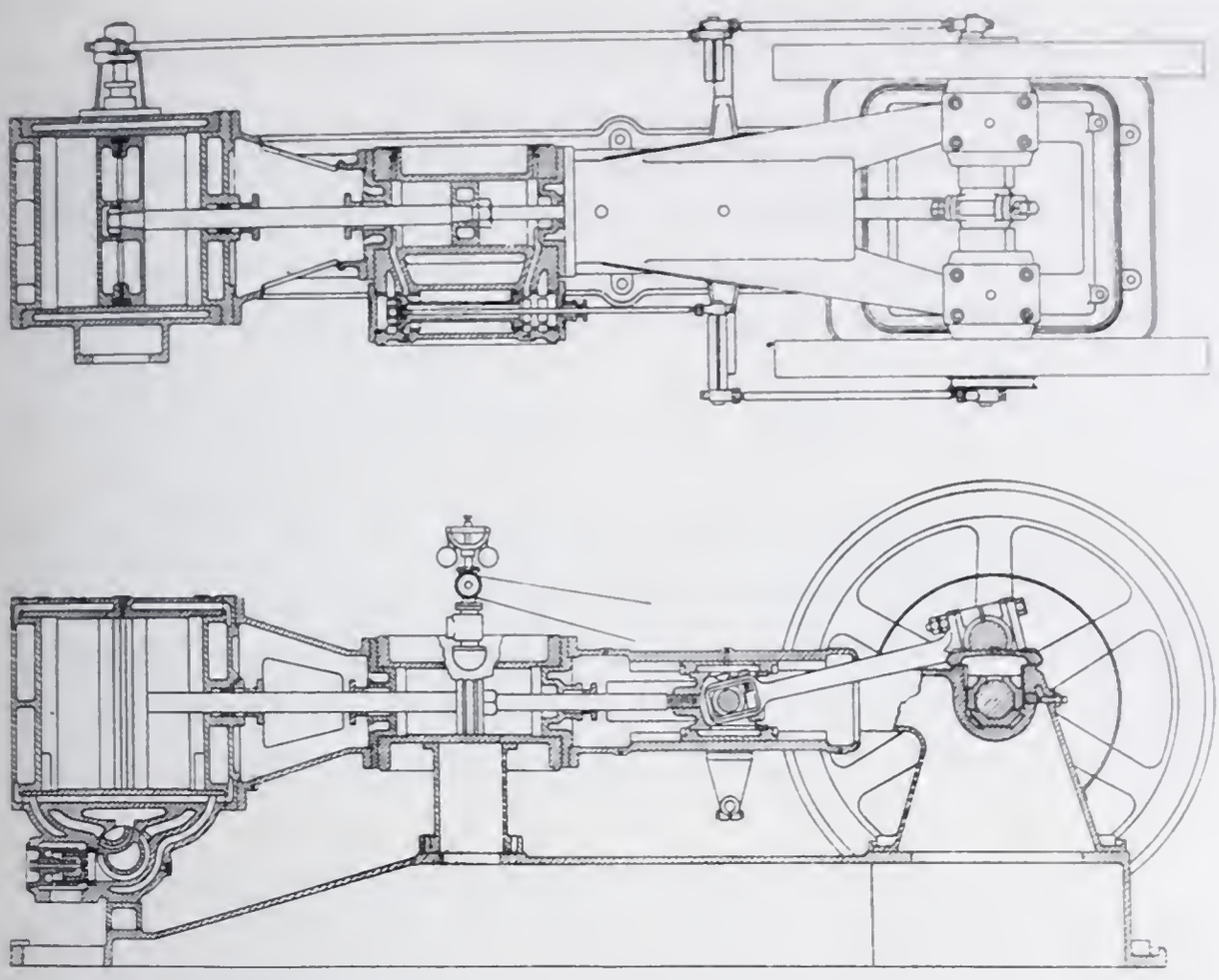

Fig. 16. Details of Rotative Dry Vacuum Pump.

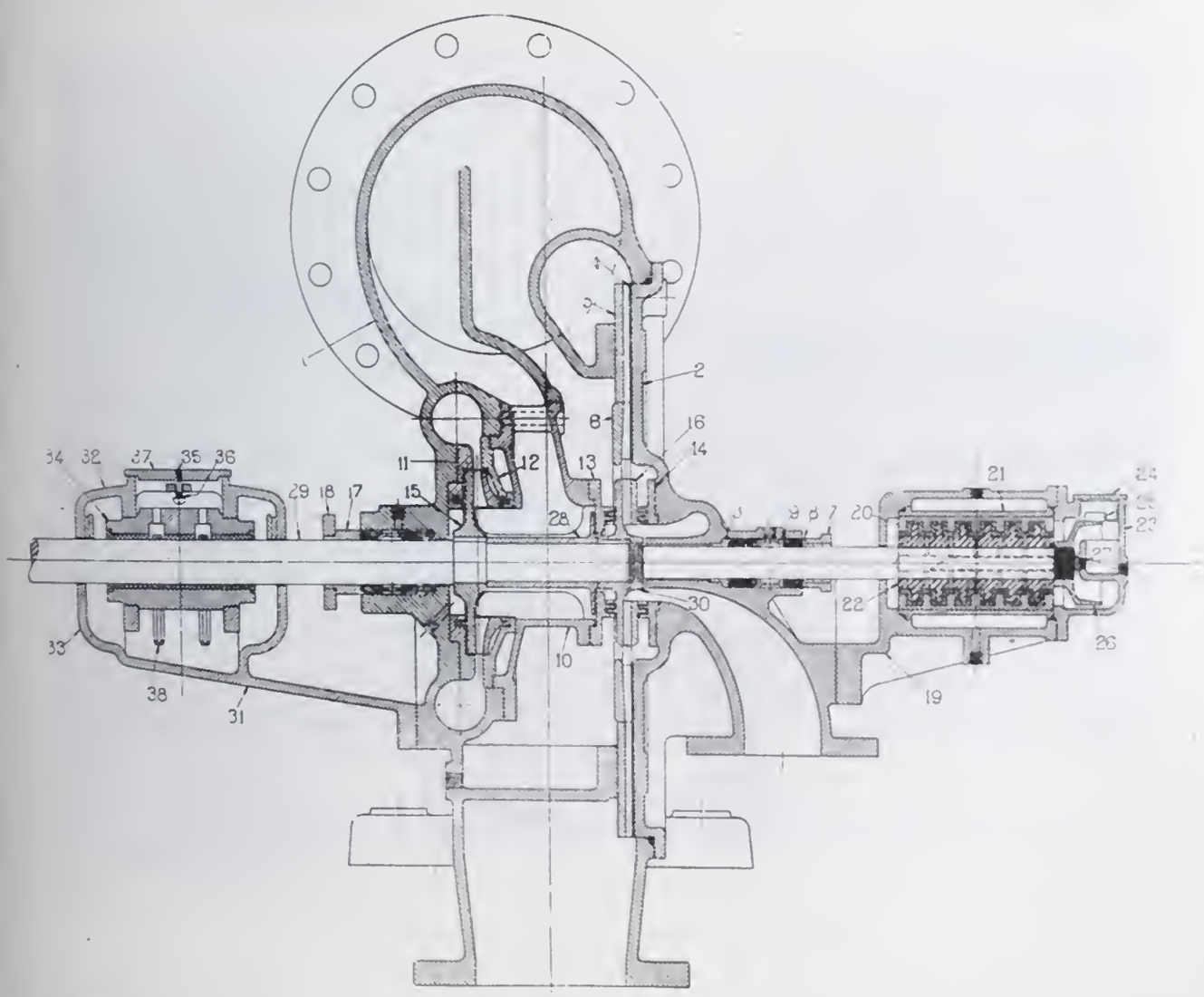

Fig. 17. Wheeler Turbo Air and Condensate Pump Details. "A. E. G."

3. The direct-acting, rotative, low-speed, dry vacuum pump, when used in connection with a proper condensate pump, is really the most efficient in point of power consumption, and where space is available is practicable up to, say, 250 000 pounds of steam per hour with a 28-inch vacuum, but for jet or barometric work at the same vacuum for only about one-half that amount of steam.

4. The hydraulic or turbo air-pumps, such as the A. E. G., Leblanc, or other suitable types, are very generally used and, although large consumers of power, they are very well adapted to all types of work where economy of space, convenience of arrangement, layout, etc., make them more practicable than other types.

5. The steam-jet, which I mentioned above, has so far been confined principally to marine and ice machine work, the reason being the high steam consumption. For example, a steam-jet using 1600 pounds of steam per hour from tests, shows an air-handling capacity of about 13 cubic feet of free air per minute at 1.5 inches partial pressure. This, I find in the example given, means on the same basis very nearly four per cent. of the main unit power. The

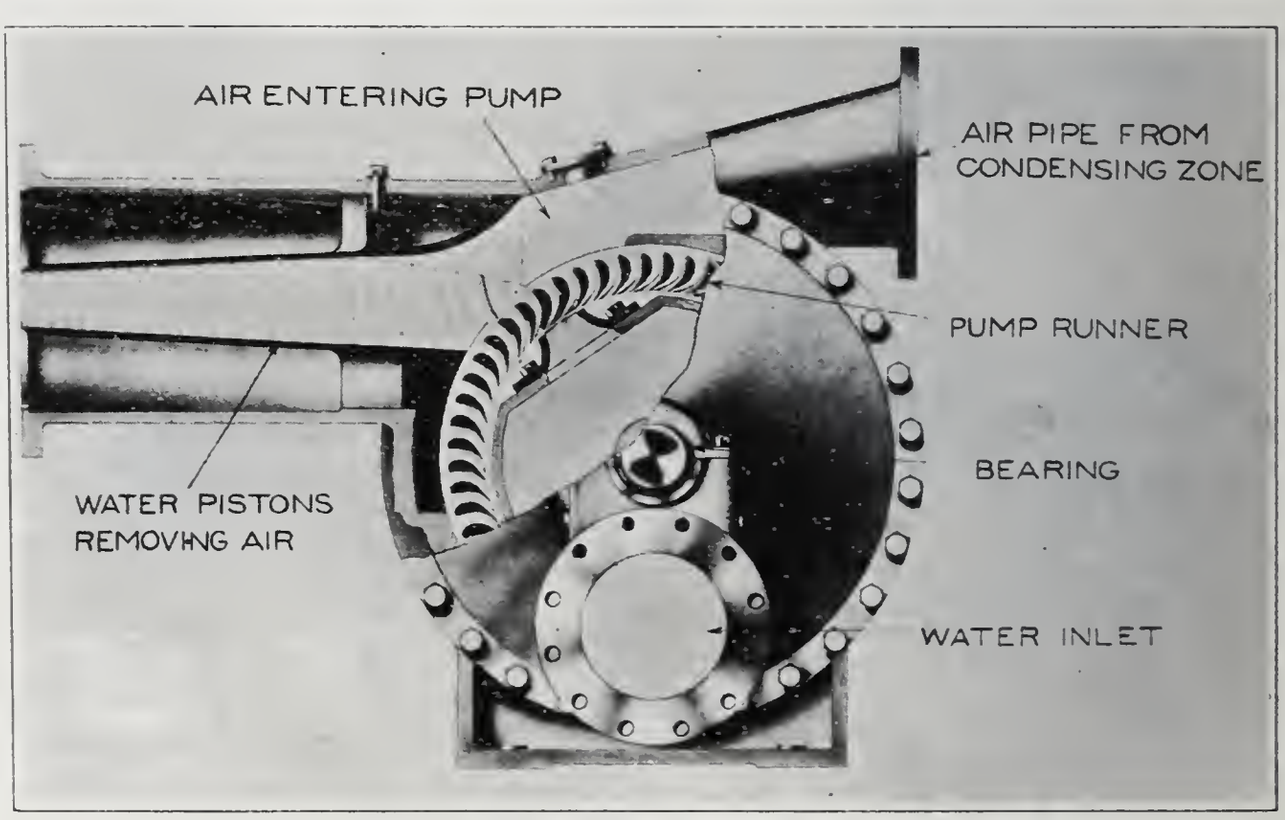

Fig. 18. LeBlanc Air-Pump Details.

hydraulic pump using the same amount of steam with turbine drive would handle about 32.5 cubic feet of free air per minute under the same conditions. A rotative, dry vacuum pump of the same capacity, 32.5 cubic feet per minute, would require about 900 pounds of steam per hour. Steam pressure approximately 100 pounds.

In specifying an air-pump, due consideration should be given the requirements under winter conditions with cold water. If condensing equipment is designed for a 28-inch vacuum with 70-degree water, the purchaser should reasonably expect a corresponding vacuum with colder water. With water at 35 degrees for surface work the theoretical vacuum, based on a 15-degree difference, with a properly designed machine, should produce a 29.354-inch vacuum, and the same for barometric or jet condensers based on a five-degree difference. No such guarantee can be made commercially by any manufacturer and can be made at all only by designing and furnishing a decidedly abnormal air-pump or air-handling equipment.

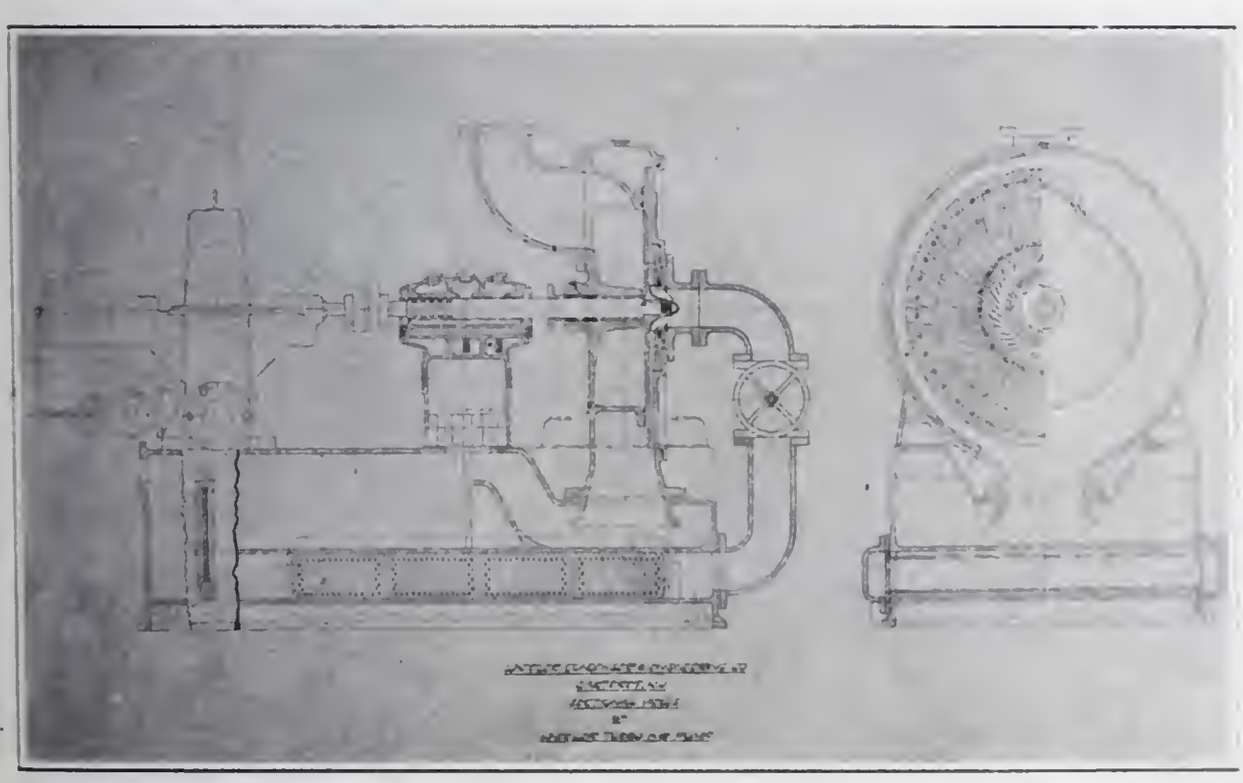

Fig. 19. Turbine-Driven Wheeler Turbo Air and Condensate Pump with Base Cooler for Heating Water.

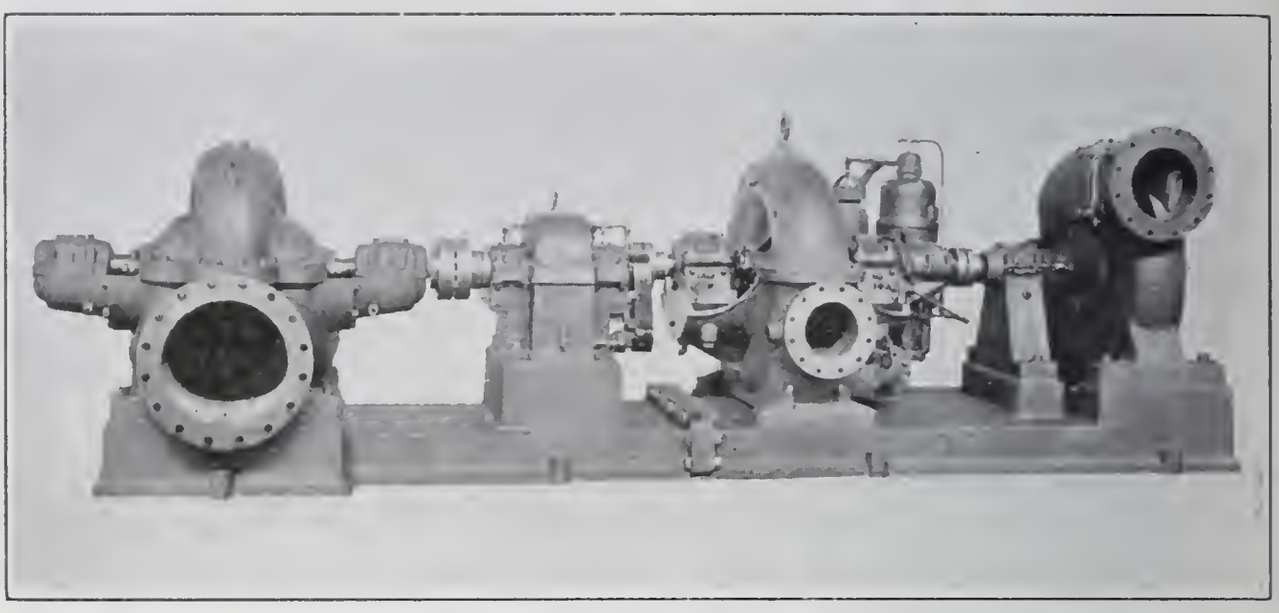

Fig. 22. Turbo Air and Condensate at Right and Centrifugal Circulating Pump Driven by Steam Turbine.

CONDENSATE PUMPS

These are of the single or two-stage standard centrifugal, steam-turbine or motor-driven or of the direct-acting duplex type, with some means of control, such as a float, to insure continuous supply of water to the pump.

CIRCULATING PUMPS

Circulating or supply pumps are usually of the centrifugal type, turbine or motor-driven, or a combination of both.

SURFACE CONDENSERS

The requirements, as to surface, depend upon several things; the amount of water available, or the advisable amount to be pumped from an unlimited supply, the temperature, and the practicable rate of heat transfer per square foot of surface per mean degree of temperature difference. This rating as to surface depends principally upon the amount of heat that can be dissipated practically by each square foot of surface, this being determined by the heat transfer per degree difference between the mean temperature of the circulating water and the temperature of the vacuum to be attempted. For instance, with a vacuum of 28

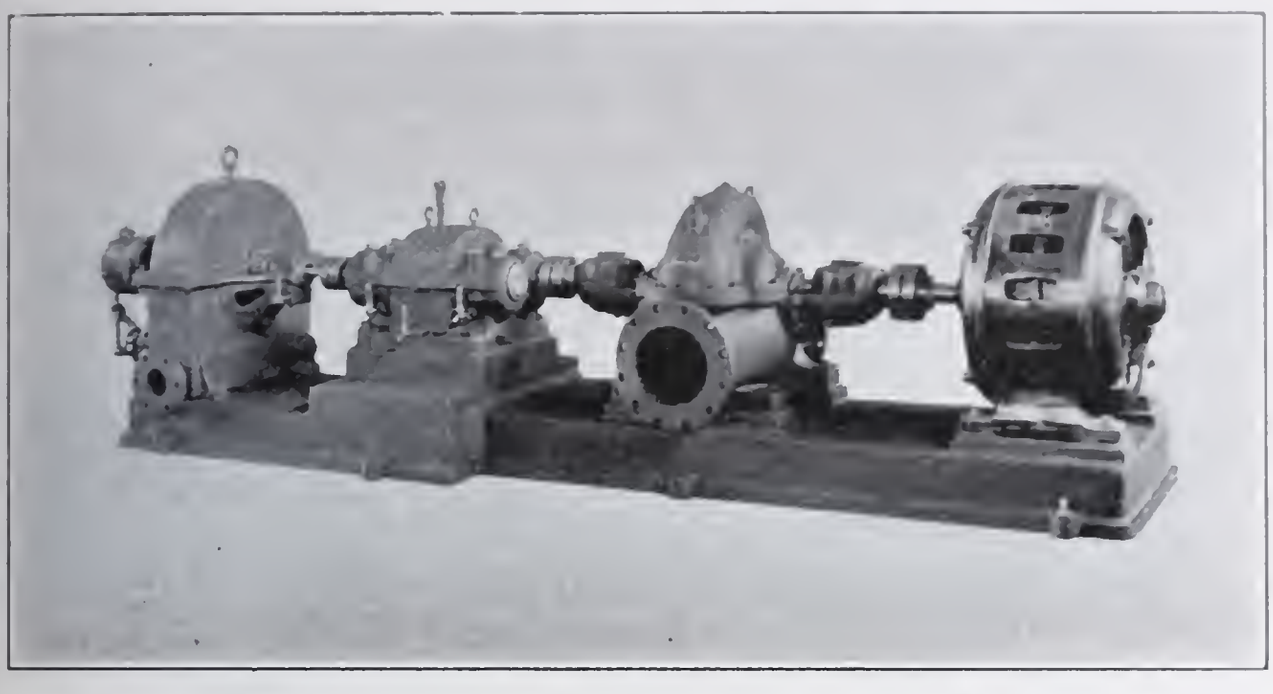

Fig. 21. Combination Steam Turbine (Geared) and Motor (Direct) Driven Centrifugal Pump.

inches, having a temperature of 101 degrees F. and with 70-degree water at a five-degree difference; that is, a final water temperature five degrees below the temperature of the vacuum, we have a 26-degree rise or 13 degrees mean temperature rise, giving a mean water temperature of 83 degrees F., or 18 degrees mean temperature difference. Assuming 300 B. t. u. heat transfer per mean degree difference, each square foot of surface should then absorb 5400 B. t. u.

At 10 degrees difference we have a 21-degree rise, or 10.5 degrees mean rise, or a mean water temperature of 80.5 degrees, or a mean temperature difference of 20.5 degrees, which at 300 B. t. u. heat transfer would require each square foot of surface to absorb 6150 B. t. u.

At 15 degrees difference we have 16 degrees rise, 8 degrees mean rise, 78 degrees mean water temperature, 23 degrees mean temperature difference at 300 B. t. u. heat transfer, or 6900 B. t. u. per square foot.

At 20 degrees difference we have 11 degrees rise, 5.5 degrees mean rise, 75.5 degrees mean water temperature, 25.5 degrees mean temperature difference at 300 B. t. u. heat transfer, or 7650 B. t. u. per square foot.

The water quantities for each pound of steam at 1000 B. t. u. per pound would be in the above cases 38.5, 47.6, 62.5 and 90 pounds, respectively.

At high vacuum the specific volume of steam becomes enormous; 339.6 cubic feet for a 28-inch vacuum, and 1259 cubic feet for a 29.5-inch vacuum, and the addition of surface or baffles to a condenser of ordinary design may entirely defeat the purpose of the designer because of the increased resistance to the flow of steam between the tubes and through the condenser. Particular attention should therefore be paid to providing steam lanes, or to the proper arrangement of tube banks, so as to keep down this resistance of flow to a minimum. In some well-known cases removal of 10 to 20 per cent. of the tube surface has materially increased the vacuum.

Water and Surface Ratings. The quantity of water available and the temperature usually determine the vacuum which it is practicable to maintain. This quantity can be varied for the same vacuum by varying the assumed terminal temperature differnce, which will directly vary the surface for any given rate of heat transfer. A terminal temperature difference of 5, 10, 15 or 20 degrees can be used, and a ratio of heat transfer from 300 to 500 can be used. For standard commercial work a terminal temperature difference of 15 degrees is usually conceded to be the best practice, and a heat transfer of from 300 to 350 is conceded to be the most conservative.

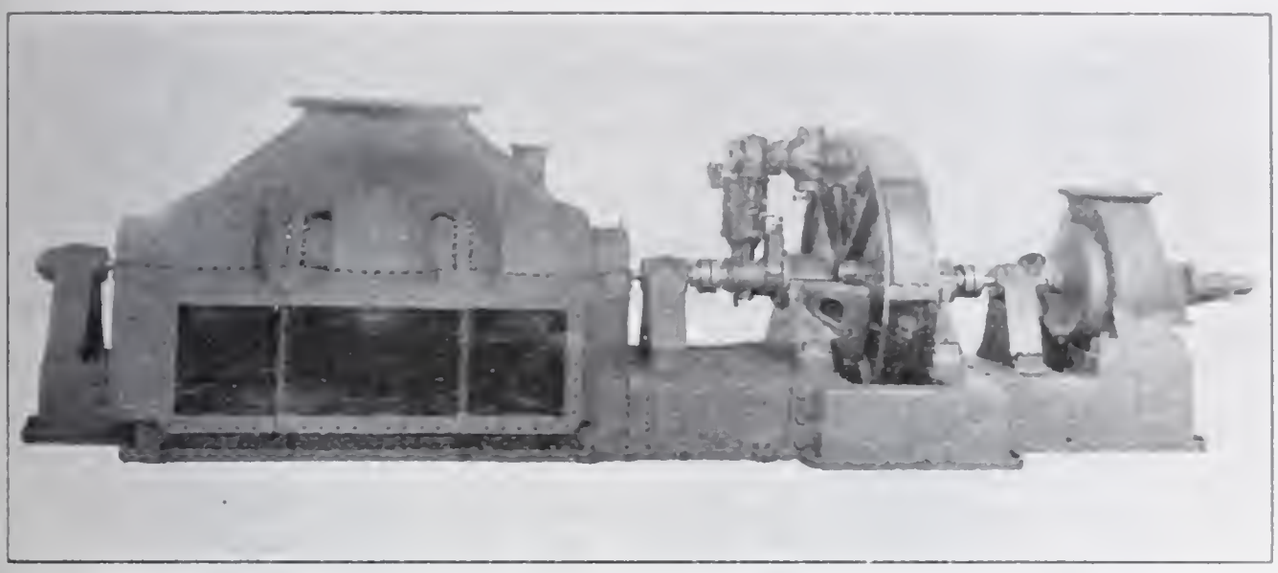

Fig. 23. Tri-Rotor Centrifugal Pump and Turbo Air Pump—Steam Turbine-Driven—for 30 000 Kw. Turbine.

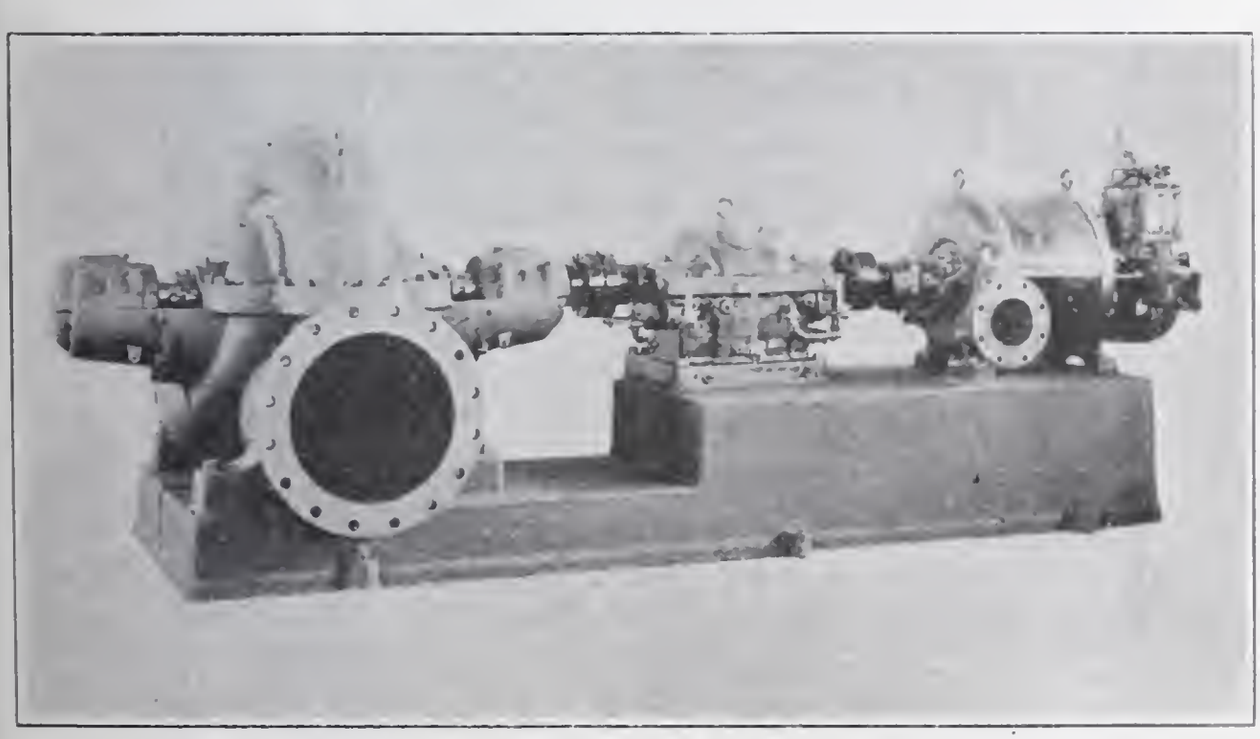

Fig. 20. Steam Turbine (Gear) Driven Centrifugal Pump.

POUNDS OF CONDENSING WATER PER POUND OF EXHAUST STEAM

(1000 B. t. u. per Pound)

Vacuum	Difference between Discharge Water Temperature and Steam Temperature	Entering Water Temperature Degrees F.					
		40°	50°	60°	70°	80°	90°
29″	0	25.6	34.5	52.6	111.0	...	...
	5	29.4	41.7	71.5	250.	..	...
	10	34.5	52.6	111.0	...	...	...
	15	41.7	71.5	250.0	..	..	...
	20	52.6	111.0	..	..	...	...
28.5″	0	19.3	23.8	31.2	45.5	83.3	500.
	5	21.3	27.0	37.0	58.8	143.0	...
	10	23.8	31.2	45.5	83.3	500.0	..
	15	27.0	37.0	58.8	143.0	.	...
	20	31.2	45.5	83.3	500.0	.	.
28.0″	0	16.3	19.6	24.2	32.0	47.0	89.0
	5	17.8	21.6	27.6	38.2	61.6	160.0
	10	19.6	24.2	32.0	47.0	89.0	800.0
	15	21.6	27.6	38.2	61.5	160.0	...
	20	24.3	32.0	47.0	89.0	800.0	. .
27.0″	0	13.4	15.4	18.2	22.2	28.6	40.0
	5	14.3	16.7	20.0	25.0	33.3	50.0
	10	15.4	18.2	22.2	28.6	40.0	66.7
	15	16.7	20.0	25.0	33.3	50.0	100.
	20	18.2	22.2	28.6	40.0	66.7	200.
26.0″	0	11.7	13.3	15.3	18.0	22.0	28.2
	5	12.4	14.2	16.5	19.8	24.7	32.8
	10	13.3	15.3	18.0	22.0	28.2	39.2
	15	14.2	16.5	19.8	24.7	32.8	48.8
	20	15.3	18.0	22.0	28.2	39.2	64.5

Fig. 1.

GALLONS PER MINUTE OF CIRCULATING WATER AND SQUARE FEET OF SURFACE
FOR 1,000,000 B.T.U.s PER HOUR (1,000 LBS. OF STEAM, 1,000 B.T.U.s PER POUND)

Vacuum Referred to a 30" Barometer	Difference between Discharge Water Temp & Steam Temp	Temperature of Entering Water																									
		40°		45°		50°		55°		60°		65°		70°		75°		80°		85°		90°		95°		100°	
Inch Mercury	Deg. F	G.P.M.	Sq.Ft.	G.P.M.	Sq.Ft.	G.P.M.	Sq.Ft.	G.P.M.	Sq.Ft.	G.P.M.	Sq.Ft.	G.P.M.	Sq.Ft.	G.P.M.	Sq.Ft.	G.P.M.	Sq.Ft.	G.P.M.	Sq.Ft.	G.P.M.	Sq.Ft.	G.P.M.	Sq.Ft.	G.P.M.	Sq.Ft.	G.P.M.	Sq.Ft.
29"	20	105	113	142	123	221	136	492	151																		
	15	83	123	105	136	142	151	221	171	492	196																
	10	69	136	83	151	105	171	142	196	221	230	402	277														
	5	59	151	69	171	83	196	105	230	142	277	221	350	492	474												
28½"	20	77	101	86	110	126	119	184	131	342	143																
	15	65	110	77	119	96	131	126	145	186	163	342	186														
	10	56	119	65	131	77	145	96	163	126	186	186	216	342	258												
	5	49	131	56	145	65	163	77	186	96	216	126	258	186	319	342	420										
28½"	20	63	93	74	100	91	108	118	117	168	128	290	142														
	15	54	100	63	108	74	117	91	128	118	142	168	159	290	181												
	10	48	108	54	117	63	128	74	142	91	159	118	181	168	209	290	248										
	5	43	117	48	128	54	142	63	159	74	181	91	209	118	248	168	394	290	304								
28"	20	55	87	63	93	75	99	92	108	119	118	170	129	297	143												
	15	48	93	55	99	63	108	75	118	92	129	119	143	170	160	297	182										
	10	43	99	48	108	55	118	63	129	75	143	92	160	119	182	170	210	297	249								
	5	39	108	43	118	48	129	55	143	63	160	75	182	92	210	119	249	170	306	297	398						
28"	20	49	82	55	88	64	94	77	101	95	109	124	119	179	130	325	145										
	15	43	88	49	94	55	101	64	109	77	119	95	130	124	145	179	162	325	184								
	10	39	94	39	101	49	109	55	119	64	130	77	145	95	162	124	184	179	214	325	255						
	5	36	101	36	109	39	119	49	130	55	145	64	162	77	184	95	214	124	255	179	315	325	412				
27½"	20	41	75	46	80	52	85	59	90	70	97	85	104	107	114	146	124	230	137	340	160						
	15	37	80	41	85	46	90	52	97	59	104	70	114	85	124	107	137	146	160	230	172	340	198				
	10	34	85	37	90	41	97	46	104	52	114	59	124	70	137	85	160	107	172	146	198	230	232	340	281		
	5	31	90	34	97	37	104	41	114	46	124	52	137	59	160	70	172	85	198	107	232	146	281	230	356	340	405
27"	20	36	70	40	74	44	78	50	83	57	89	67	93	80	103	100	111	133	121	200	133	400	148				
	15	33	74	36	78	40	83	44	89	50	95	57	103	67	111	80	121	100	133	133	148	200	167	400	190		
	10	31	78	33	83	36	89	40	95	44	103	50	111	57	121	67	133	80	148	100	167	133	190	200	222	400	266
	5	29	83	31	89	33	95	36	103	36	111	44	121	50	133	57	148	67	167	80	190	100	222	133	266	200	388
26	20	31	63	33	66	36	70	40	74	44	78	50	83	57	88	66	93	70	102	93	111	130	120	193	132	371	147
	15	29	66	31	70	33	74	36	78	40	83	44	88	50	93	57	102	66	111	70	120	98	132	130	147	102	165
	10	27	70	27	74	31	78	33	83	36	88	40	93	44	102	50	111	57	120	66	132	79	147	98	165	130	188
	5	25	74	25	78	27	83	31	88	33	93	36	102	40	111	44	120	50	132	57	147	66	165	79	188	98	220
25"	20	27	59	28	62	31	66	34	68	37	72	41	76	46	84	52	86	59	92	70	90	84	106	107	113	145	126
	15	25	62	23	65	28	68	31	72	34	76	37	81	41	86	46	92	52	98	59	106	70	115	84	126	107	139
	10	24	65	24	68	25	72	28	76	31	81	34	86	37	92	41	98	46	106	52	115	59	126	70	139	84	156
	5	23	69	23	72	24	76	25	81	29	86	31	92	34	98	37	106	41	115	46	126	46	139	59	156	70	177

Fig. 2.

This gives an idea of what may be accomplished in relation to water quantities, and of course if the surface be reduced in proportion to the rate of heat transfer (350, 400, 450 or 500 B. t. u. per mean degree difference) it would materially reduce the cost, but decrease the margin of safety for overloads and fouled tubes.

Regarding the surface per kw. upon which we see so much discussion, no condenser is ever rated by kw., but by pounds of steam per hour, and in all cases the B. t. u. per pound of steam should be given. In a recent paper before the Boston Societies the following statement was made as to surface for certain installations:

Station	Turb. capacity	Sq. ft. surf.	Sq. ft. per kw.
Waterside No. 2	22 000	25 000	1.14
Waterside No. 2	30 000	50 000	1.66
Boston Elevated	35 000	50 000	1.43
Gold Street, Brooklyn	22 000	35 000	1.59
Fisk Street, Chicago	25 000	40 000	1.60
Northwest Chicago	30 000	50 000	1.66
Seventy-fourth Street, New York	30 000	50 000	1.66
Buffalo	20 000	33 000	1.65

I wish to bring to your attention some other recent installations, surface specified, with guarantees:

Turbine cap. kw.	Sq. ft. surface	Surface per kw.	Lb. st. per hour	Vacuum guar.	Temp. cir. water
10 000	19 000	1.90′	125 000	28″	75°
20 000	44 000	2.2′	240 000	28.5″	75°
10 000	20 000	2′	130 000	28.2″	70°
10 000	25 000	2.5′	135 000	28″	80°
20 000	40 000	2′	220 000	28.5″	70°
15 000	35 000	2.33′	200 000	27.25″	80°
20 000	35 000	1.55′	260 000	27.25″	85°
20 000	35 000	1.75′	268 000	27″	83°
25 000	45 000	1.8′	285 000	28″	75°
30 000	45 000	1.5′	385 000	28.4″	70°
15 000	26 000	1.73′	190 000	28″	70°
30 000	60 850	2.02′	345 000	28.5″	70°
15 000	26 300	1.75′	147 000	28.55″	70°

Water Velocities for Surface Condensers. Regarding the much-discussed subject of water velocities for surface condensers, eminently good engineers have advocated as high as ten feet per second, stating emphatically that eight feet is conceded to be practical and standard.

Since from tests of well-known large condensers a water velocity of four and seven-tenths feet per second seems to be the average, we will assume five feet. Now suppose that this velocity be increased to eight or ten feet, you can readily figure the excessive power requirements for such conditions. All talk of eight to ten feet per second seems to be absurd in view of the fact that there are very few commercial plants in practical operation under this condition.

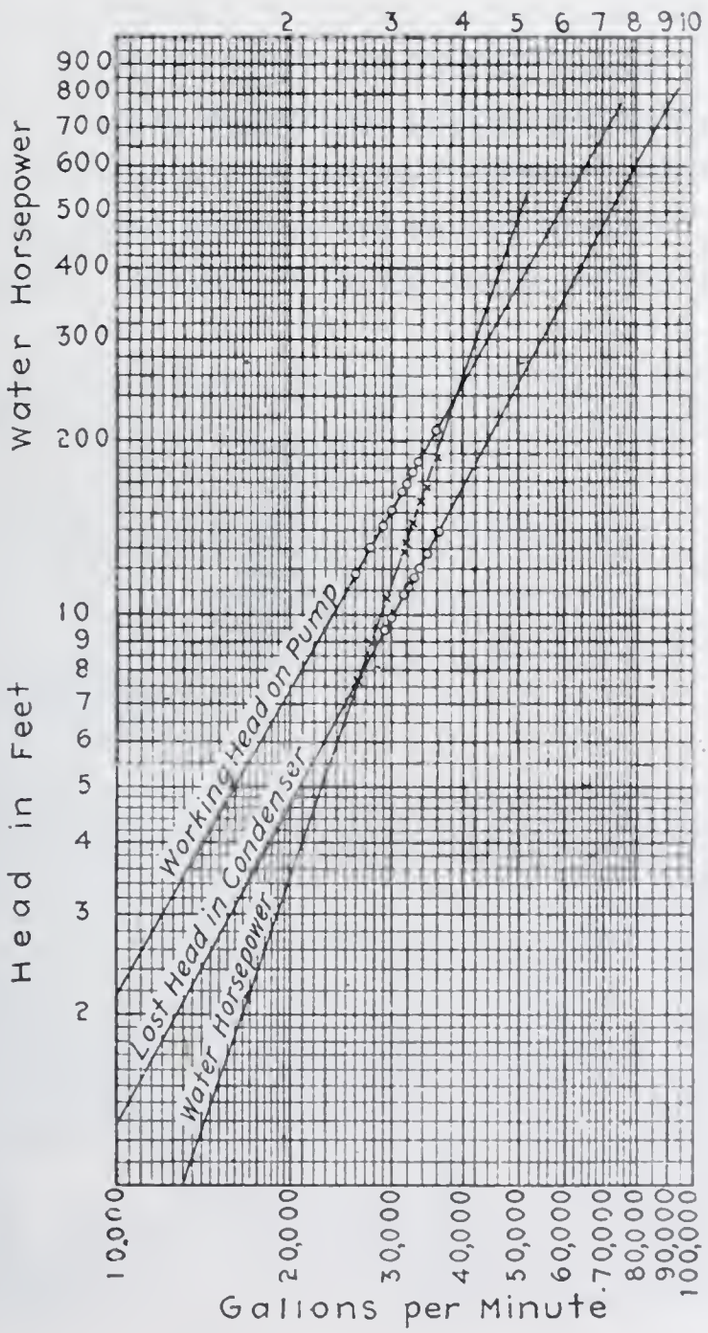

CURVES OF CENTRIFUGAL-PUMP TEST

Fig. 3.

By plotting the curve of head lost in the condenser against the discharge in gallons per minute on logarithmic paper, it is found that the head lost varies as the 1.75 power of the discharge; but since the velocity varies directly as the quantity of water we conclude that the head lost varies according to the 1.75 power of the velocity. This exponent is but slightly lower than the exponent 1.87, given in the American Civil Engineers' Pocket Book, or the exponent 2 generally conceded an average value. As the water horsepower depends upon the quantity times the head, the horsepower should vary as the cube of the velocity. It is found, by plotting the water horsepower curve, that the exponent is 2.9; that is, the horsepower varies as the 2.9 power of the gallons per minute, or of the velocity through the condenser tubes. Assuming a water velocity of five feet per second and 30 000 gallons per minute, by increasing this velocity to ten feet per second the head loss in the condenser would be 35 feet, making a total head of 52 feet, instead of 10 and 15 feet; and a water horsepower of over 800, instead of 112.

LOW LEVEL TYPE JET CONDENSERS

Water quantities are usually figured at a five-degree terminal difference as standard practice, although results have easily been obtained at the temperature of the vacuum or a 100 per cent.

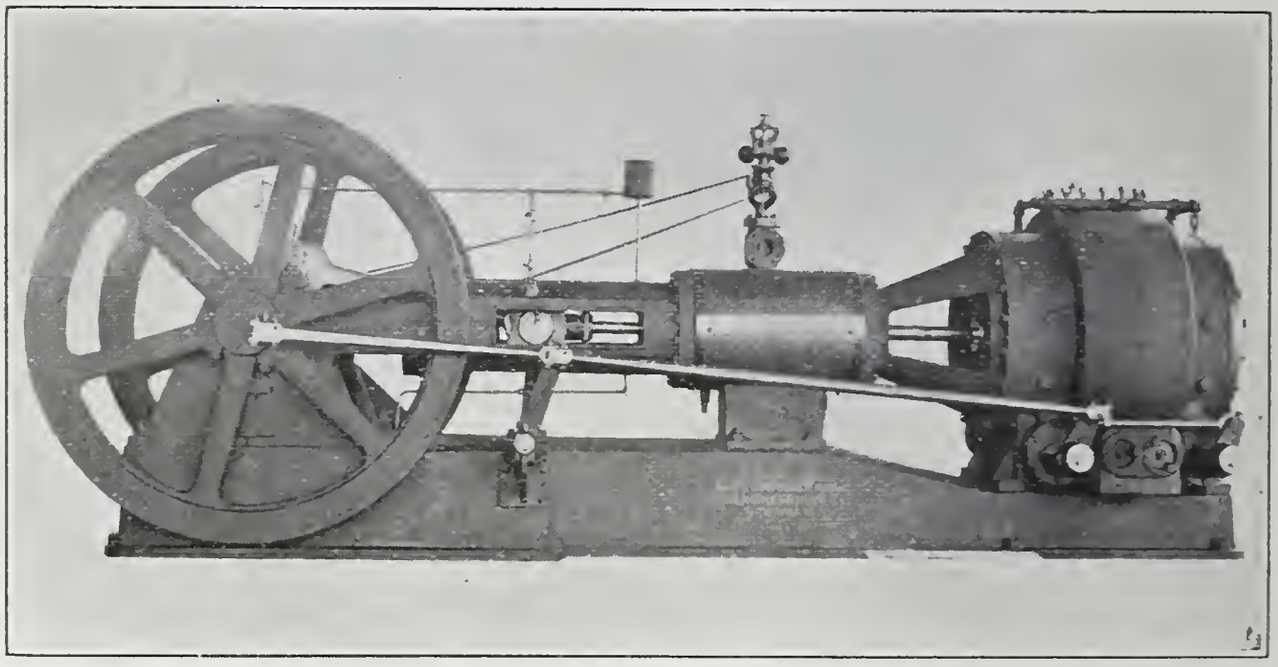

Fig. 24. Tandem, Forked Frame, Two-Valve, Rotative, Dry Vacuum Pump.

water efficiency. The removal or tail pump, as already stated, requires the larger amount of power. With the usual river conditions the water has to be supplied to a cold well by a booster pump, drawn into the condenser by suction, and expelled against the vacuum plus any friction and outside static head. The booster pump power has not been considered in the example of power requirements for the types already given. The air-pump is required to remove air coming in with the water, as well as air entering through leaks in the exhaust or other piping, and air entering with the steam.

BAROMETRIC CONDENSER

Here also the water quantities are figured as in the low type jet machine. The water supply can be more easily obtained in that it can be pumped directly to the barometric head without booster or auxiliary pumps. The air-pump requirements are the

Fig. 25. Vertical 30 000 G. P. M. Centrifugal Pump.

same as in the low type jet. The efficiency of the booster pump for the low type jet, when required, and of the supply pump for the barometric can be assumed as standard, consistent with good centrifugal pump design at a given head and quantity, but the removal pump efficiency for the jet is seldom over 50 to 60 per cent. owing to the low velocity of the entering water in the impeller when pumping from a vacuum. The barometric type, therefore, as far as power requirements are concerned, is more efficient than the jet and less efficient than the surface type. No condensate is reclaimed for boiler-feed purposes in either case.

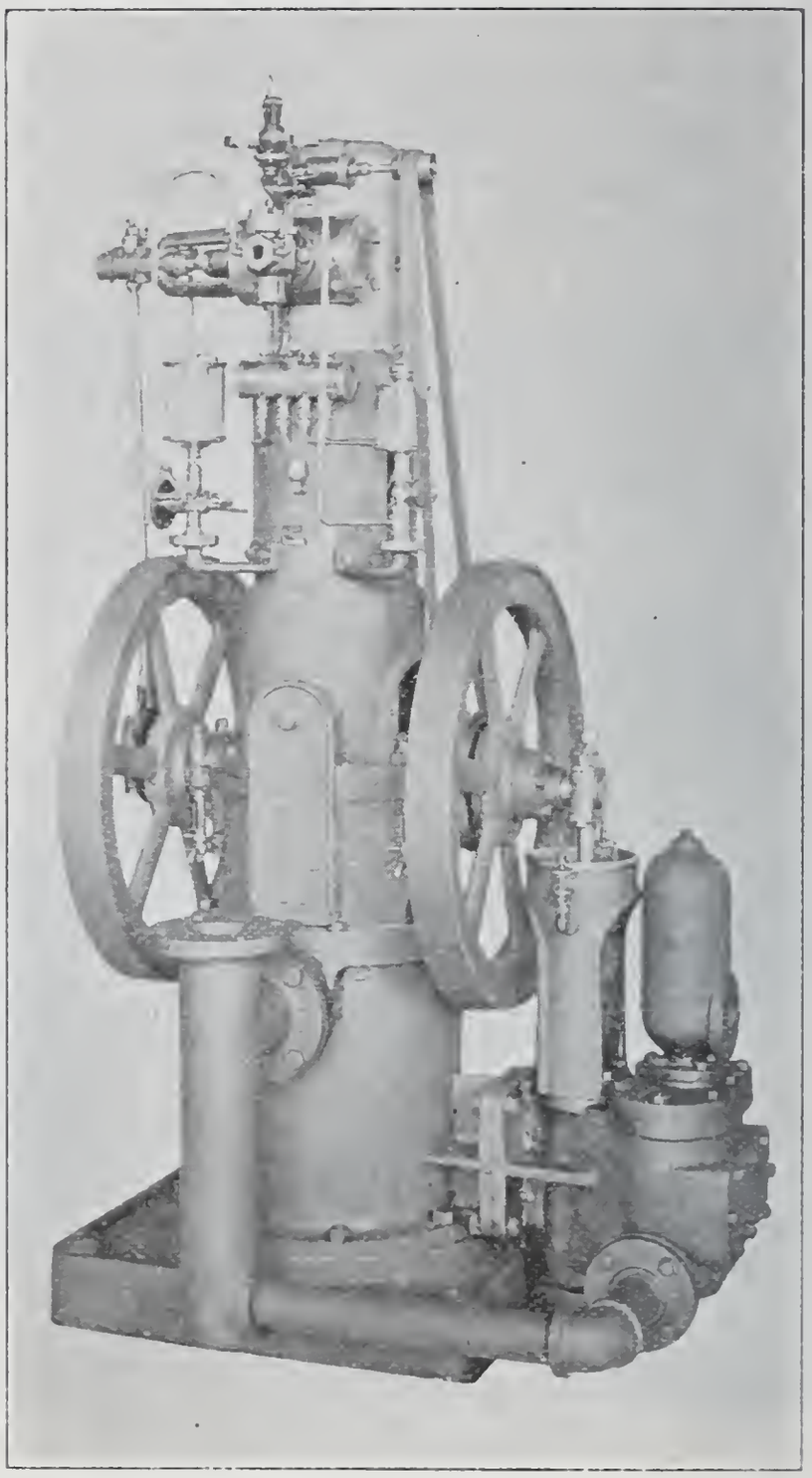

Fig. 26. Edwards Wet Vacuum Pump with Tail Pump for Elevating Condensate.

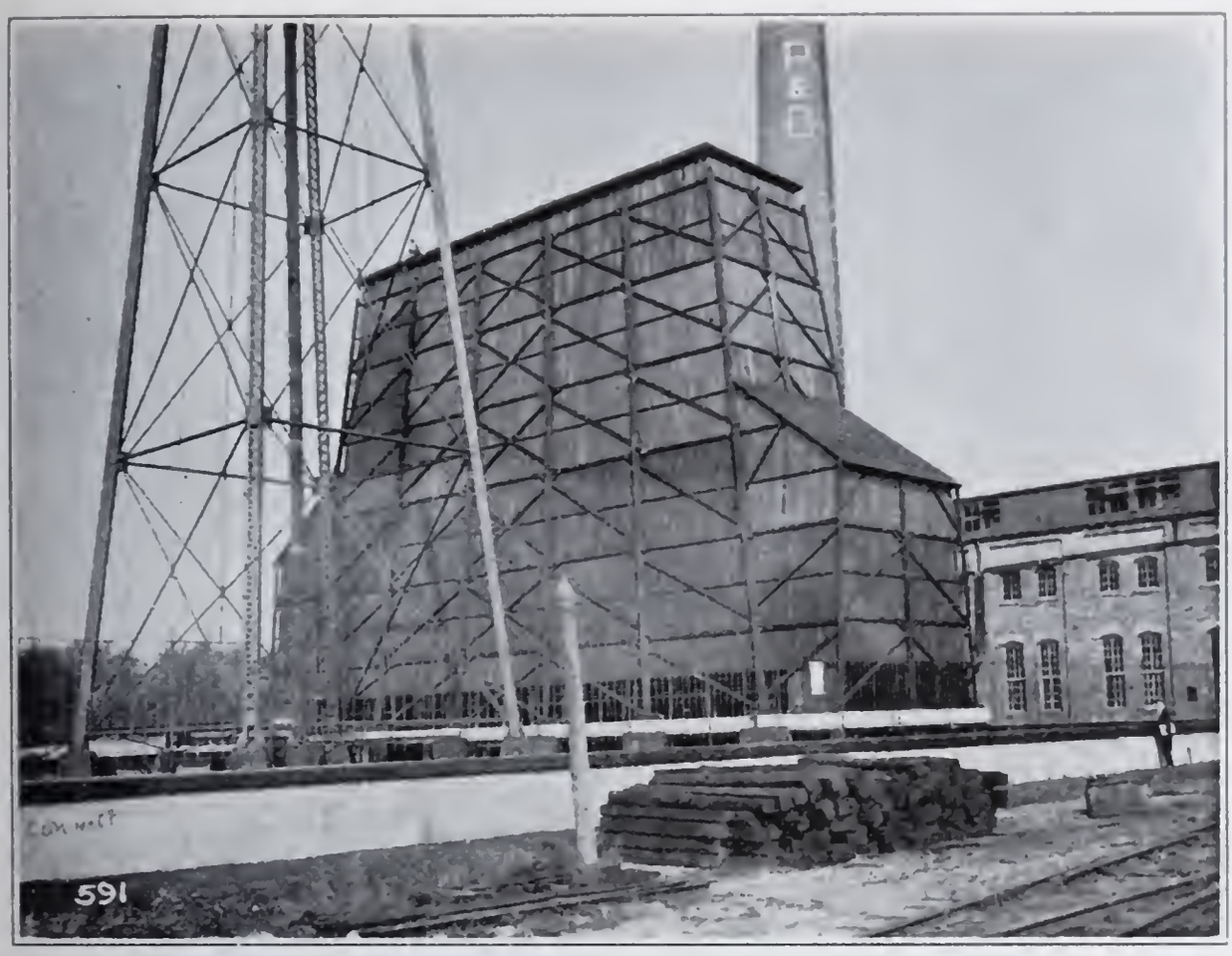

Fig. 27. Natural Draft Chimney Type Cooling Tower.

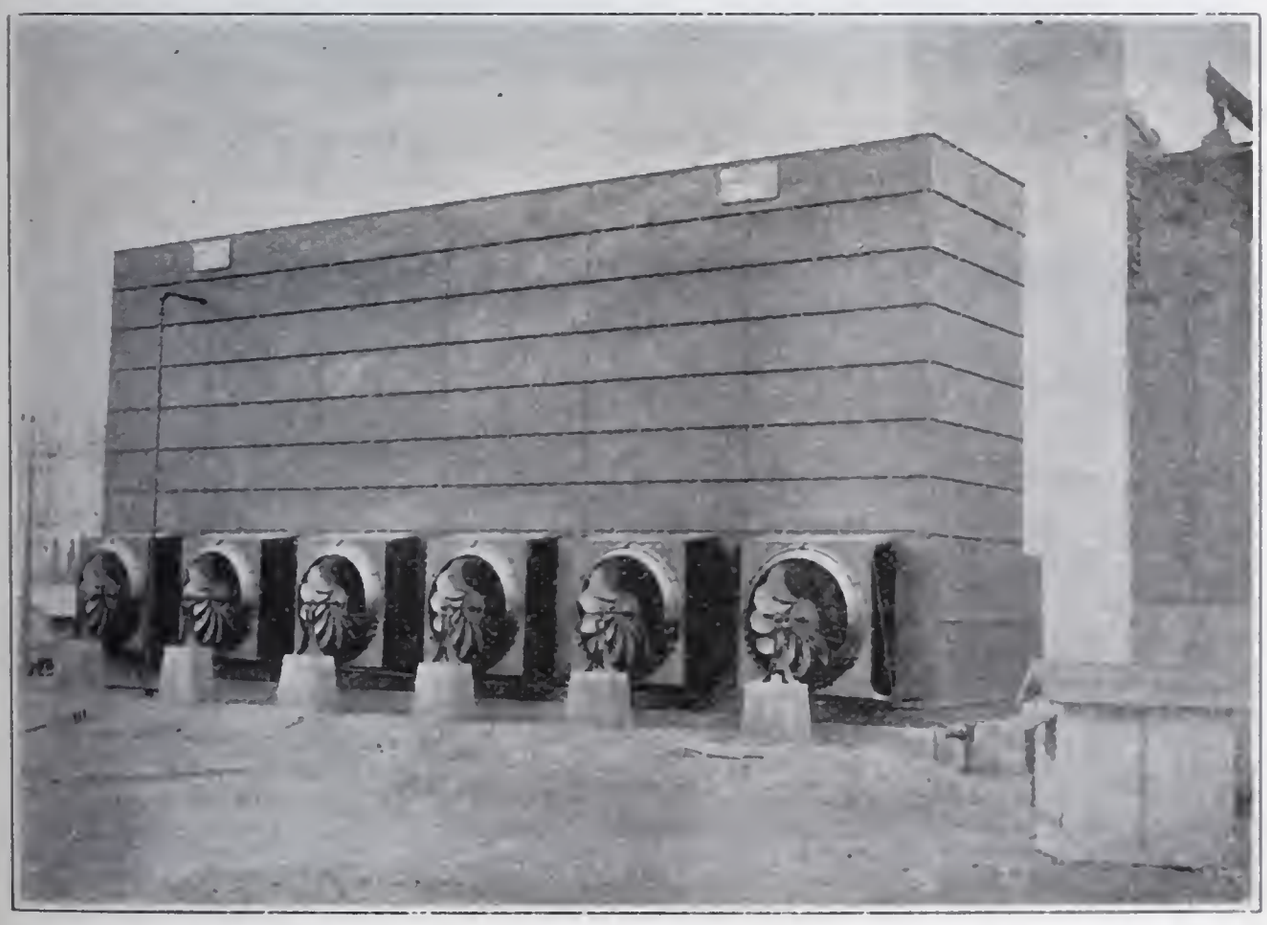

Fig. 29. Six-Section Forced Draft Cooling Tower.

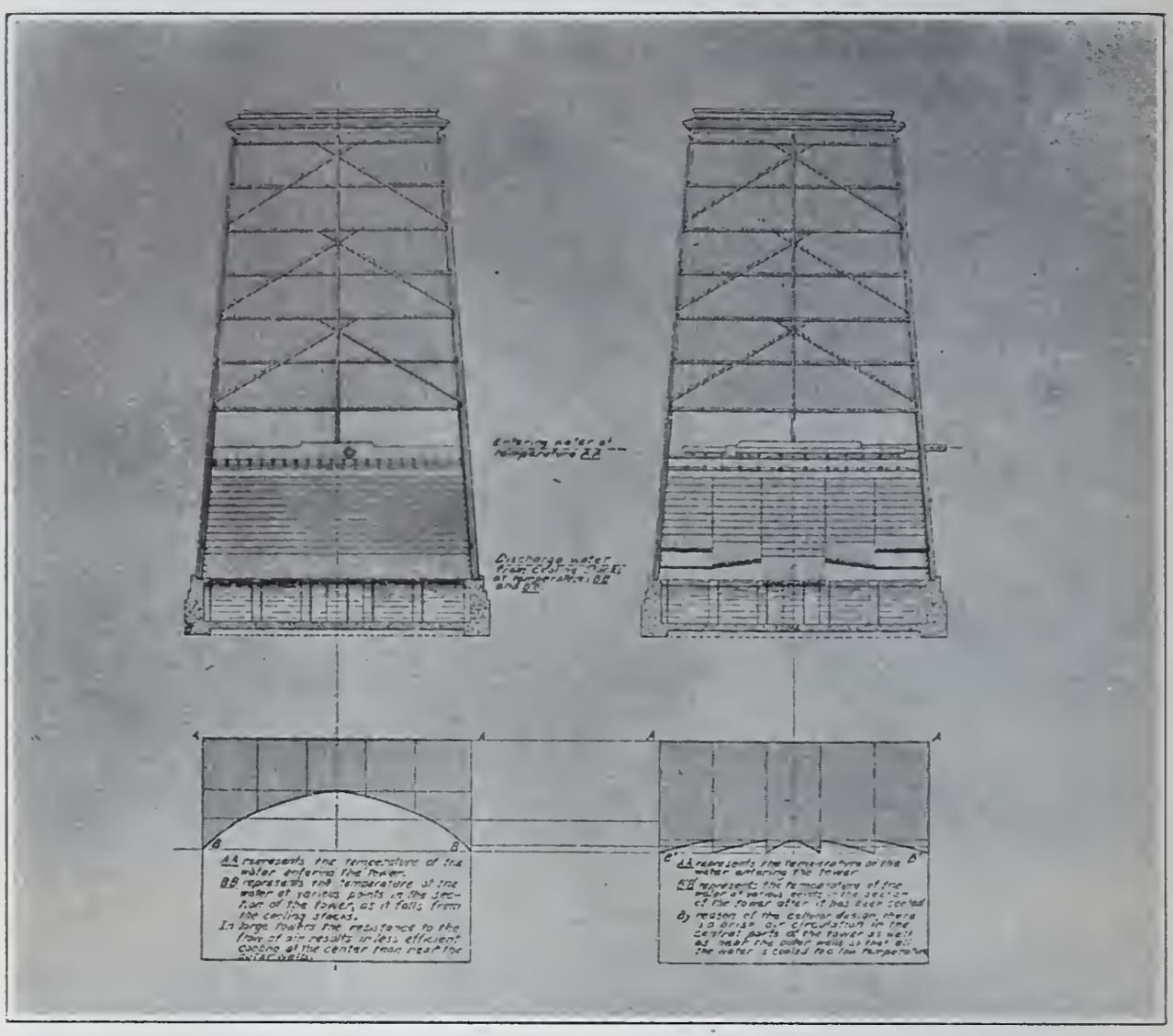

Fig. 28. Details of Natural Draft Chimney Type Cooling Tower.

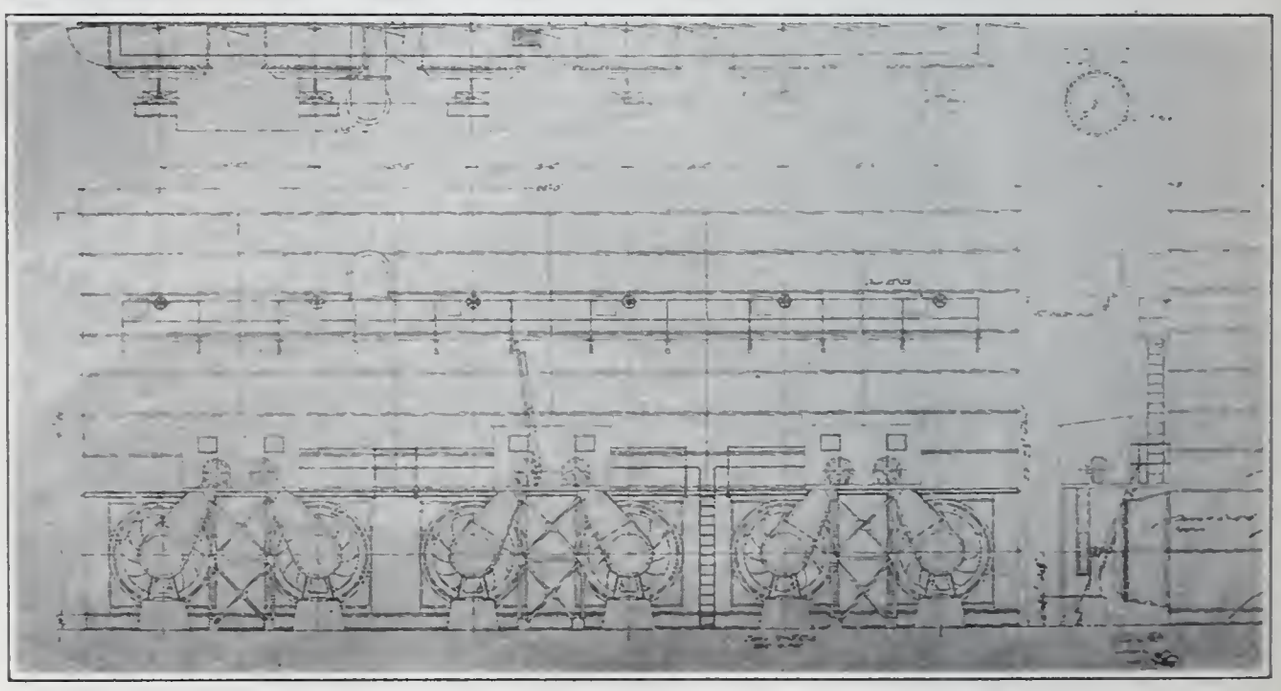

Fig. 32. Details of Six-Section Forced Draft Cooling Tower.

ARTIFICIAL COOLING OF WATER

Where water supply is a serious problem some artificial method of cooling a given supply of circulating water is employed. This is done in several ways.

Cooling Towers. 1. Natural-draft, enclosed type. 2. Natural-draft, open or rack type. 3. Forced-draft. 4. Combined forced and natural-draft.

In standard cooling tower practice it has been determined that with the air temperature at 75 degrees F. and at 70 per cent. relative humidity, the most economical vacuum to attempt is 27 inches, based on a 30-inch barometer, or a vacuum having a temperature of 115 degrees F. Rating all three types of condenser on a five-degree difference, thus requiring a minimum, uniform amount of water, it will be necessary to cool the water from 110 degrees F. Commercially, under the given air conditions, it has been found practicable to cool to only 85 degrees F. or sometimes to 80 degrees F., giving a 25 or 30-degree cooling range, which with steam at 1000 B. t. u. per pound would require 40 and 33.3 pounds of water per pound of steam, respectively.

The type of equipment to select would depend upon existing local conditions, such as space available and power consumption. The natural-draft open type requires more ground space and can be placed only where the vapors and driftage will do no harm to surrounding buildings or property, being seriously affected by wind conditions. This type requires a pumping head of approximately 30 feet and no other power. The natural-draft, enclosed chimney type takes less ground space. The chimney or stack is usually about 75 feet high, this causing a positive draft at all times. It requires a pumping head of about 25 feet and no other power, and will be practically independent of wind conditions. The forced-draft type requires less floor space than any other type, but requires a pumping head of about 30 to 35 feet, and an additional amount of power for driving the fans, giving a draft independent of atmospheric conditions. The combination forced-draft and natural-draft tower requires less floor space than the chimney type natural-draft machine and more than the forced-draft machine, and requires about the same pumping head as the

natural-draft chimney type machine, plus the power to drive the fans when operating under forced-draft conditions. This type has the advantage of conservation of power under favorable atmospheric conditions, or of combining the forced and natural-draft under adverse conditions.

Spray Ponds. Spray Nozzles. It is impossible to state generally the area of a pond for a given quantity of water, but, generally speaking, at a working pressure of six to seven pounds on the spray nozzles, a pond of three square feet per gallon of water sprayed will be necessary. There are quite a number of details to be considered, all having vital bearing on the subject of spray nozzle cooling. First, for spray nozzles the cooling effect can be increased by increasing the pressure at the nozzle. An increase of from 5 to 20 pounds would show an increase of from 1 to 12 per cent. in cooling. The size of the nozzle should also be considered. Assuming a given size nozzle as rated at 100 per cent., an increase of up to 135 per cent. can be obtained by decreasing the size, while by increasing the size a decrease to 60 per cent. will be shown in the rated efficiency or cooling effect. The size of the pond or its storage capacity is a very valuable asset, in that the greater the storage volume the more time it requires in continuous service to pass it through the condenser. This time causes

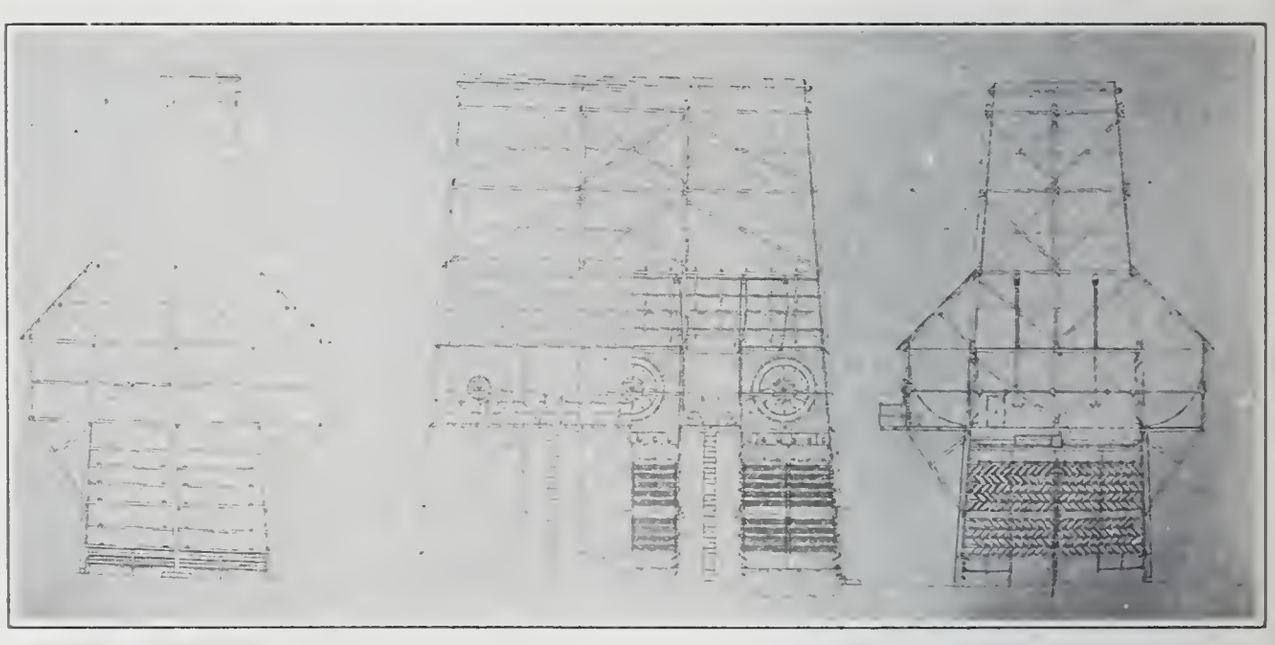

Fig. 30. Section of Special Combination Natural and Induced Draft Cooling Tower. 9000 G. P. M. from 130 Degrees F. to 85 Degrees F. Air at 75 Degrees F. at 70 Per Cent. Humidity.

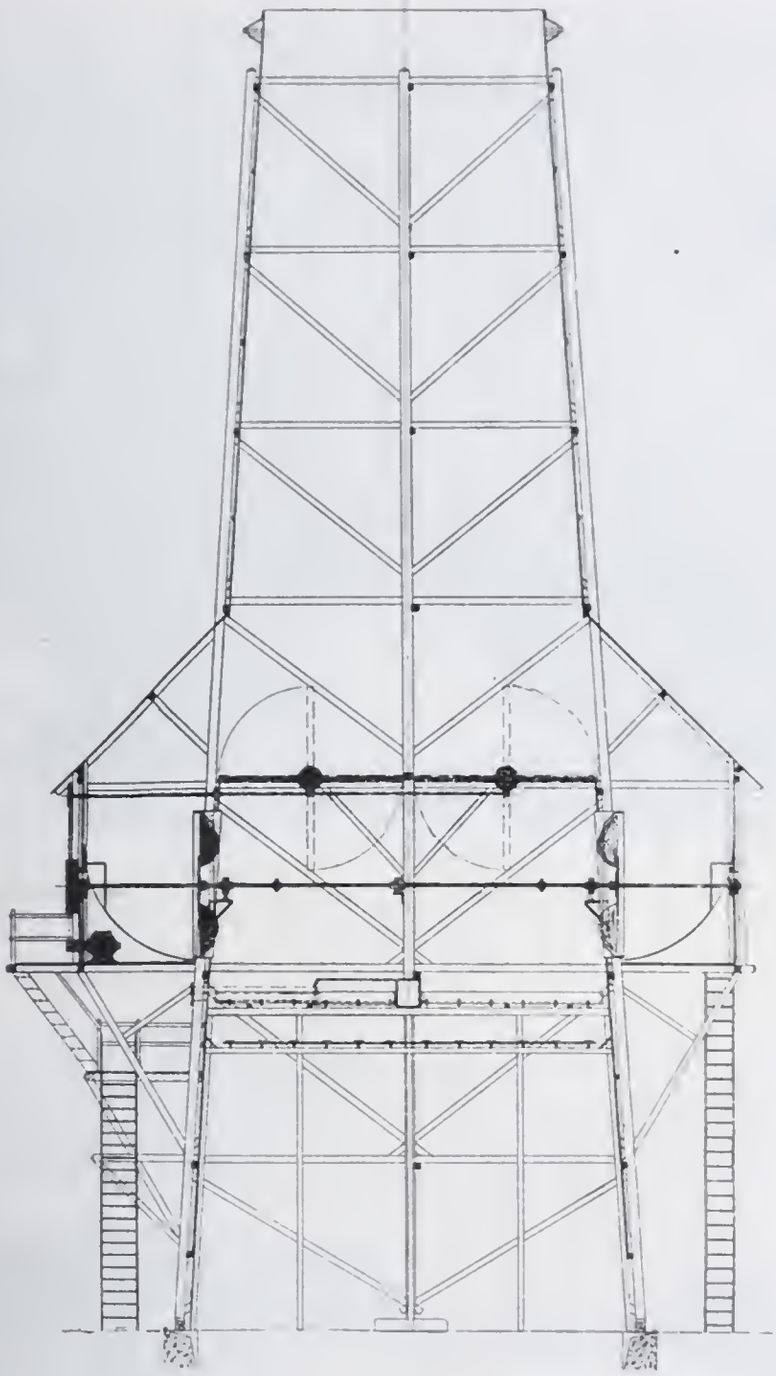

Fig. 31. Section of Combination Natural and Induced Draft Cooling Tower.

and equals what is called the lag in the pond temperature. The greater the lag the lower will be the average temperature in the pond. Therefore, the mean atmospheric conditions over the lag period can be assumed. Sprays are usually arranged in groups, so that free access by the air can be obtained at all times. The groups are arranged in single or double deck, depending upon the space conditions.

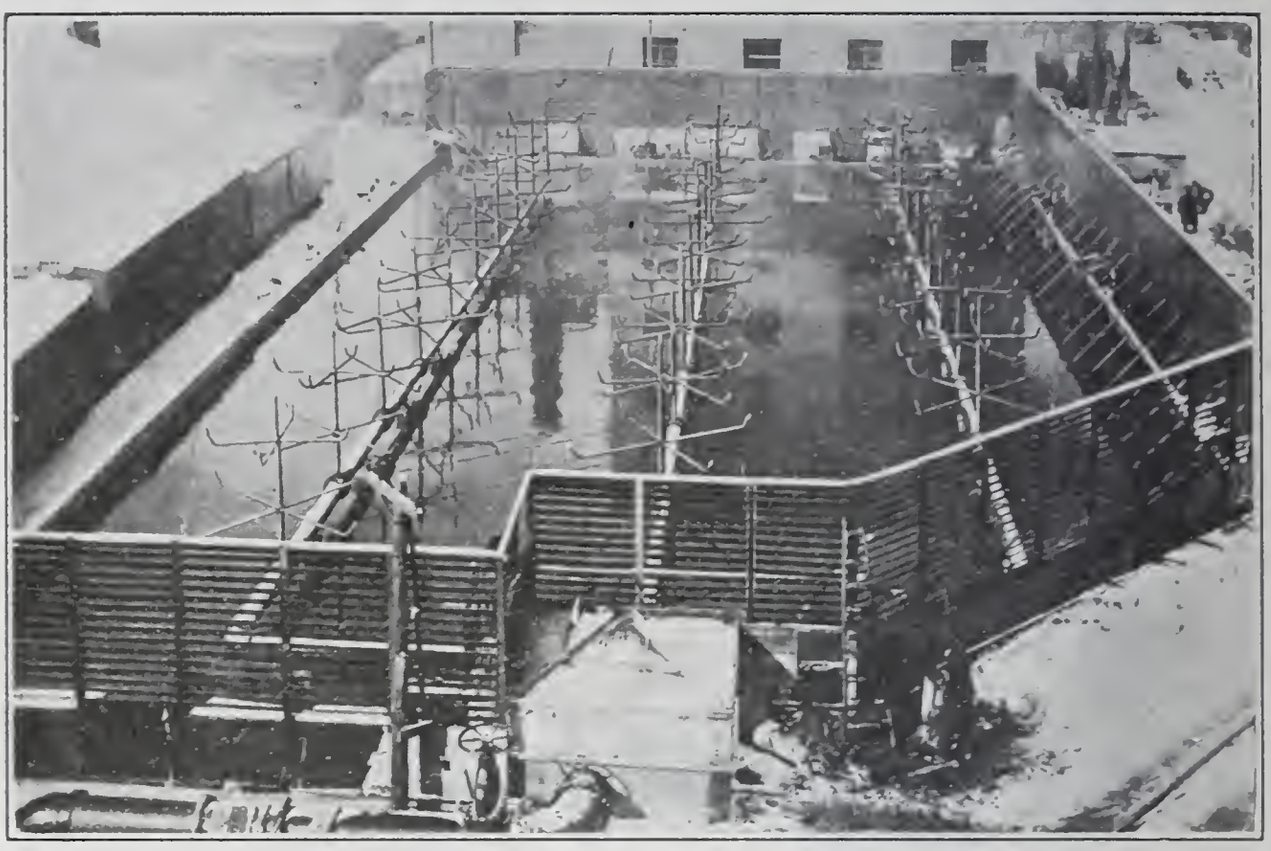

Fig. 34. Spray Cooling Pond—Sprays Arranged in Double Deck with Louvres.

Fig. 33. 20 000 G. P. M. Spray System on Bank of Canal 110 Degrees F. to 85 Degrees F. Air at 75 Degrees F. at 70 Per Cent. Humidity.

Natural Cooling Ponds. The area of a natural cooling pond is obviously very large, as the heat dissipated per square foot depends upon the relative humidity, the temperature of the water and the velocity of the air currents. These are naturally, on account of varied conditions, very discordant.

Quoting from G. F. Gebhardt's "Steam Power Plant Engineering:"*

"It appears from tests that under ordinary conditions, in the northern part of the United States, with engines using 15 pounds of water per horsepower hour and a vacuum of 26 inches, a reservoir having a surface of 120 square feet per horse power would be ample for cooling the condensing water."

This would mean about 60 square feet for each gallon of condensing water for a 26-inch vacuum, which, of course, would be greatly increased for a higher vacuum. The advantages, therefore, are, of course, with spraying under pressure.

In any water-cooling device 90 per cent. of the cooling effect is through evaporation, and it is therefore of vital importance that sufficient unsaturated air be given free access to the proper quantity of water. The air in all cases should go off the tower or pond in a saturated condition.

I want to call attention here to the Government records. These are usually taken at 8 a. m. and 8 p. m. and not as they prevail during the day, and under ordinary conditions existing in this country the relative humidity falls as the temperature rises during the day, or increases slightly as the temperature falls.

*Ed. 4, 1913, p. 517, quoting W. R. Ruggles, Proc. A. S. M. E., April, 1912, p. 607.

DISCUSSION

Mr. E. F. Clark:* Mr. Pendleton's paper is very comprehensive and to me quite interesting. After reading the paper, however, it seems that its author is somewhat prejudiced against the jet condenser, so I will present a few facts in behalf of the jet.

As regards the limitations of the various types of condenser, it should be noted that 10 000 kw. is far from being the practical limit for jet condensing equipment, if the experience of the Westinghouse Company is any criterion. In this connection, we refer you to the 1917 report of the Prime Movers Committee of the National Electric Light Association, which includes a statement of the Westinghouse Company, listing the large surface and jet condensers sold to central stations in 1916, and commenting upon the scope of this business. It is stated that a total of 16 large jet condenser equipments were sold in 1916. By "large jet" is meant condensers serving turbines of 6000 kw. capacity or above. This list includes both single and twin jet equipments and the average size of the turbine served is 14 000 kw. The largest of the single condensers serves a 20 000 kw. turbine at Birmingham, Ala. The largest of the twin jets is for the Narragansett Electric Lighting Company, Providence, R. I., and is installed to operate with a 45 000 kw. Westinghouse compound turbine generator unit. According to the same report, the Westinghouse Company sold a total of more than 75 large jet condensing equipments up to the end of the year 1916. The demand for large jet condensers is increasing rather than decreasing, judging from our sales of the present year, which have shown a considerable increase over any similar period.

Mr. Pendleton's statement, that large jet condensers are installed principally as a matter of policy, possibly first cost, and certainly not from an engineering standpoint, is not quite clear. Surely the engineers who decide to put these large jet condensers in their own plants, do so because it is best from an engineering standpoint. I could cite a number of instances in our own experience where the jet type of condenser was decided upon only

*Sales Engineer, Westinghouse Electric and Manufacturing Company, Pittsburgh.

after a very thorough investigation as to the relative merits of jet and surface types. It is not particularly to a manufacturer's interest to recommend the jet type if he builds surface condensers too, for a surface condenser is approximately twice as costly as a jet type, which means that the building of the surface condenser is commercially more desirable.

Engineers as a class will not agree with Mr. Pendleton that the average log of a surface condenser will show a better vacuum than a jet condenser. It is true that if both types of condenser are proportioned to give the same vacuum with warm water when condensing a given amount of steam, the performance of the surface condenser with cold water will be approximately one-tenth inch better than the jet. If on the other hand, we circulate as much water through the jet as we do through the surface condenser, we get the advantage reversed in favor of the jet. Ordinarily, a condenser, if selected to give a reasonable vacuum in the summer time, must necessarily give an excess vacuum in the winter time; that is, a greater vacuum than the turbine can utilize. If the jet condenser will operate with a terminal difference of five degrees and less with water at 65 degrees and warmer, a properly designed jet condenser is bound to produce a better vacuum than can a commercial size of surface condenser when using warm injection water. From this we see that the jet condenser does not compare unfavorably with the surface condenser as far as concerns the actual vacuum obtained.

As regards barometric condensers, we too have found that there is a predilection for this type of condenser in the Pittsburgh territory. Of course, there are conditions where the barometric fits in better than any other type, but these cases are rather infrequent. When water is available at a favorable head, and the exhaust piping layout is simple, the barometric makes a good installation and is financially attractive. Another condition favorable to this type is acidulous circulating water. Since an acid solution is more corrosive when warm than when cold, it is an advantage to have no moving part in contact with the acidiferous circulating water after it has been heated by condensing steam. The absence of a circulating pump in the tail pipe of this type of condenser leaves nothing in contact with the warm

water except the tail pipe, and makes it desirable for such a condition.

The whole paper, including the description of cooling towers, is very interesting, and is very profitable to those of us who are interested in the installation or operation of condensing plants. I would like to ask about these cooling towers and spray ponds. Did most of those jobs use jet condensers with the cooling towers?

MR. PENDLETON: Most of them used surface condensers.

MR. CLARK: The largest proportion of inquiries we get, mostly on smaller installations, use the jet condenser on the cooling towers because the jet takes less water and there is a saving in horsepower. I wonder if Mr. Pendleton could give us comparative figures on the cost of cooling towers and jet condenser, and surface condenser. Is the cooling tower roughly about the same as the condenser that is installed?

MR. PENDLETON: Cooling tower manufacturers today are somewhat arbitrary in their prices, and it is very hard to answer as to comparative cost. The jet condenser, based on the five-degree difference, will take exactly the same amount of water as the surface condenser. The cooling tower head is the same in both, and the pumping head in the jet is from 220 to 270 per cent. more.

MR. CLARK: What is the velocity of the water?

MR. PENDLETON: Any velocity for which it seems expedient to supply the power. It averages about five or six feet per second, as I showed on the chart.

MR. PAUL A. BANCEL:* The argument seems to be on the relative merits of the direct-contact condenser and the surface

*George H. Gibson Company, Tribune Building, New York, N. Y.

condenser. I remember that seven or eight years ago, when the Leblanc condenser first came out, a paper by a Westinghouse man appeared in the Westinghouse *Electric Journal*. This paper endeavored to prove that big power houses in New York and other large cities were making a mistake by putting in surface condensers. Well, the Westinghouse people had to go into the surface condenser business themselves; so the more you study the question the more you seem to find that there is a field for both the direct-contact and the surface condenser; and a man can, under some conditions, afford to pay a great deal for his tubes in order to obtain the advantage of the surface condenser.

A year or two ago I read of a plant in England where they took the effluent from a sewage disposal plant and put it through a surface condenser. Why didn't they put it through a jet condenser?

Referring again to the paper, I was saying to Mr. Pendleton before we came in: "Isn't it queer how much more information there is published on boilers than on condensers?" The condenser has loomed up since the advent of the turbine and has become a much more important problem than it used to be. I believe in normal times the cost of a large turbine runs about $8 per kw. and the surface condenser around $3.50 or $4 per kw., which is not so much less than the boiler and stoker equipment. It is rather a large proportion of the turbine cost, whereas the old jet condenser was a mere incidental in the cost of a big reciprocating engine.

One thing about water circulation: This can be compared pretty closely to the circulating or pushing of air through a boiler. The same rules apply. The head goes up as the square of the air velocity through the boiler and the power goes up as the cube. The problem is to strike a balance between power consumed in circulating your water as against the money you otherwise expend for more surface.

Mr. J. C. Hobbs:* Steam engineers should be very much interested in this subject of "Modern Condenser Practice," which has been so well presented by Mr. Pendleton. In many of his conclusions I agree with him, but, as is sometimes the case, engi-

*Assistant to Superintendent of Power Stations, Duquesne Light Company, Pittsburgh.

neers may agree in their conclusions, but differ entirely in their reasoning. I have in mind particularly Mr. Pendleton's conclusion regarding the desirability of surface condensers for large installations, in preference to some of the other types. Exception must be taken to some of the steps which he has indicated as being used in arriving at such a conclusion, the principal one being the very much smaller amount of auxiliary power required for surface condensers than for the other types.

An analysis seems to indicate that 10 feet is too small a working head to circulate water through a condenser installation. At least 10 feet will be required to put the water through the tubes themselves, without leaving any head to take care of piping friction, entrance velocity head and such allowances as must be made for getting the water through the intake tunnel and screens to the pumps, and out again through the discharge tunnel. Mr. Pendleton, as he indicates later on in his paper, will no doubt take exception to this by stating that it is not necessary to use such high velocities through the tubes, and that it is a waste of auxiliary power to do so. This argument, I believe, has been well answered by experience, which tells us very emphatically that whenever water contains any mud or sediment, low velocities will allow it to accumulate in the tubes. This reduces the condenser efficiency to a point where the loss due to increased steam consumption of the main unit at the low vacuum more than offsets the increased steam consumption required to operate the pumps at a slightly higher head.

Although not desiring to take advantage of this opportunity for personal gain by forcing myself into the ranks of the "eminently good engineers" to whom he refers, who have advocated as high as 10 feet per second velocity, I do consider eight feet per second as being very good practice, and I must disagree with that part of Mr. Pendleton's paper regarding the advisability of using low water velocities. You have probably noticed that all of the large installations to which the Boston Section of the American Society of Mechanical Engineers refers, and most of those mentioned by Mr. Pendleton, are installations in central electric power stations. Naturally the largest and most efficient installations are in such stations, and it would seem both logical and

profitable to investigate very carefully the details of these installations, and to note the water velocities which have proved to be the most desirable.

The Prime Movers Committee of the National Electric Light Association has made the subject of condensers one of the important parts of its annual reports, wherein you will find some very interesting and valuable data. Recently, while talking with Mr. J. M. Graves, the present Chairman of this Committee, the subject of water velocities was raised, and I learned from him directly, as well as through the annual Committee reports (which are compiled by a group of eminently good engineers in actual charge of the largest condenser installations in the world), that comparatively high water velocities are particularly desirable for a number of reasons.

There are many parts of Mr. Pendleton's paper with which I do agree, and I should like to add emphasis to his statement that "particular attention should therefore be paid to providing steam lanes, or to the proper arrangement of tube banks, so as to keep down this resistance of flow to a minimum. In some well-known cases, removal of 10 to 20 per cent. of the tube surface has materially increased the vacuum."

I would like to add just a word or two to this paragraph and state that the arrangement of tube banks should be such that all the non-condensable gases should be swept by the steam towards the air-pump suction in order to eliminate the possibility of having any dead pockets containing inactive tube surface. The steam lanes should also perform the function of delivering steam to the bottom of the condenser, as close as possible to the hot-well, in order to make the condensate retain as much of its heat as possible. This, of course, must be accomplished without allowing great quantities of highly saturated steam vapor to enter the air-pump suction.

Stated in a very simple manner, a condenser really has two separate and distinct functions to perform; one, which should not be lost sight of, is to abstract from the steam all the heat necessary to condense it into water. The other function, usually incorporated directly within the one shell, is the cooling of the air which has leaked in, so as to reduce the volume, which is really

the limiting factor which the pump must handle. This second function, in reducing the temperature, also condenses a certain amount of steam. If the tube arrangements are such that the flow of steam is greatly restricted, then the first and main function is greatly handicapped, and instead of all the tube surface in the condenser being given a chance to do work, part of it is really cut off from the main flow of steam. In this case the steam which does not condense in the upper rows of tubes drops down on the other rows of tubes and is then cooled below the saturated steam temperature, introducing a loss, because this hot-well water, which is nearly always used for boiler feed, must have some heat added to it before being returned to the boiler.

One of the greatest troubles experienced in the operation of surface condensers, namely, tube cleaning, has not been mentioned in this paper. It should be kept in mind that when a decision in favor of surface condensers is once made, this decision carries with it the responsibility, care and expense of practically continuous cleaning, because there are very few sources of condenser water supply which do not leave an accumulation of some kind in the tubes. Some waters, of course, are very much worse than others, and the periods between cleanings will vary with the kind of water used. A number of very ingenious methods have been devised for doing this cleaning, varying from washing out with high pressure water to the blasting of each tube. Your time will not be taken here to discuss the details, but those who are interested may find complete information in the annual reports of the Prime Movers Committee of the National Electric Light Association. Of course, the surface condenser has some very great advantages, such as the saving of all condensed steam for use in feeding boilers. When fed with pure water a boiler may be forced to over 40 per cent. of capacity without trouble, but with impure water a much lower limit exists. Clean water also means clean boilers and a smaller loss from blowing down and from scale. It is in reality one of the deciding factors in the selection of the surface condenser in preference to a jet condenser.

Mr. Pendleton infers that the failure of a condenser to produce a high vacuum in some cases may be due to the choking effect of the low-pressure turbine blading. My analysis does not

give the same conclusions at all. Of course, it is recognized that a restriction in the low-pressure blading will hold the turbine economy down, but can it in any way prevent a condenser from producing a vacuum on the condenser side of the low-pressure blading? Certainly not! B. t. u. per pound of mixture would be a more appropriate term than "B. t. u. per pound of steam," because the exhaust steam leaving the turbine carries with it as much as 12 per cent. water, the latent heat of which was converted into mechanical energy by the turbine. The exact amount of heat which the mixture carries to the condenser depends on the quality and pressure of the steam entering the turbine, and on the thermal efficiency of the turbine. To determine the quantity of heat contained in each pound of mixture it is necessary only to make a *heat balance*.

Heat per pound of steam entering the turbine, less the sum of the heat-equivalent of work done per pound of steam, and the heat-equivalent of all electrical and mechanical losses in the generator, including bearing losses (not windage), most of which is carried away in the oil-cooling discharge water, and the small radiation loss, equals the heat per pound of mixture. The method of expressing the performance of a condenser seems in the past to have been shrouded in considerable mystery, the valuable data usually available being so often confused with the data of only secondary interest that we lose sight of the main data.

From the standpoint of utilizing the water supplied to the condenser, the efficiency of a condenser can be expressed in one figure, namely, the terminal difference, or the difference between the temperature of the steam and the temperature of the water leaving the condenser. This same term is sometimes applied to the difference between the temperature of the steam in the condenser and the temperature of the water in the hot-well. This also is an index to the efficiency of a condenser, but in a well-designed condenser should not change materially from time to time. It is understood, of course, that a reduction in the terminal difference between the steam temperature and the outgoing circulating water temperature means a reduction in the amount of circulating water which must be pumped in order to maintain any desired vacuum; also that the reduction in the difference in tem-

perature between the exhaust steam and the hot-well condensate means the giving back to the boilers of the condensed steam at a temperature as high as the steam cycle used will permit. The only other figure required to show the performance of the condenser, so far as the tube arrangement is concerned, is the vacuum which the installation will produce, and this is really of greater importance than the figure indicating the terminal difference. The fourth, and only other important item which must be kept in mind, is the power consumption of the auxiliaries. With these four figures for any given load, the performance and social standing of any condenser are well established. To elaborate further on this point, the following sketch will be of assistance. This is intended to show the proportion of steam and air vapor which exists in the condensers at the various points between the turbine nozzle and the air-pump suction. You will note that at the turbine nozzle the proportion of air vapor is infinitestimal. Air-pumps would not be required if it were not for the fact that in condensing the condensate drops into the hot-well, and is taken out by the hot-well pump without absorbing even the small amount of air which the steam brings in with it. This curve, showing partial pressures, also illustrates very clearly why a thermometer, when placed in the exhaust nozzle of a steam turbine, indicates the pressure of the exhaust steam much more accurately than the mercury columns which have been the standard for so long. The angle type of indicating thermometer shown in Plate 1 shows the type of instrument which has been found to work very successfully in this kind of service. You will note that the resistance to the flow of heat to the sensitive part of the thermometer stem has been very greatly reduced by increasing the amount of absorbing surface through the placing of discs on the part of the separable socket covering the sensitive mercury bulb. The theory of this instrument is based on the fact that there is always a definite fixed relation existing between the temperature and the absolute pressure of saturated steam. You will note that the graduations on the temperature scale are even and of the same size, while the vacuum graduations increase in size as the higher vacuums are approached, indicating that a degree has a constant value; whereas an inch or a tenth of an inch of vacuum does not have a constant value.

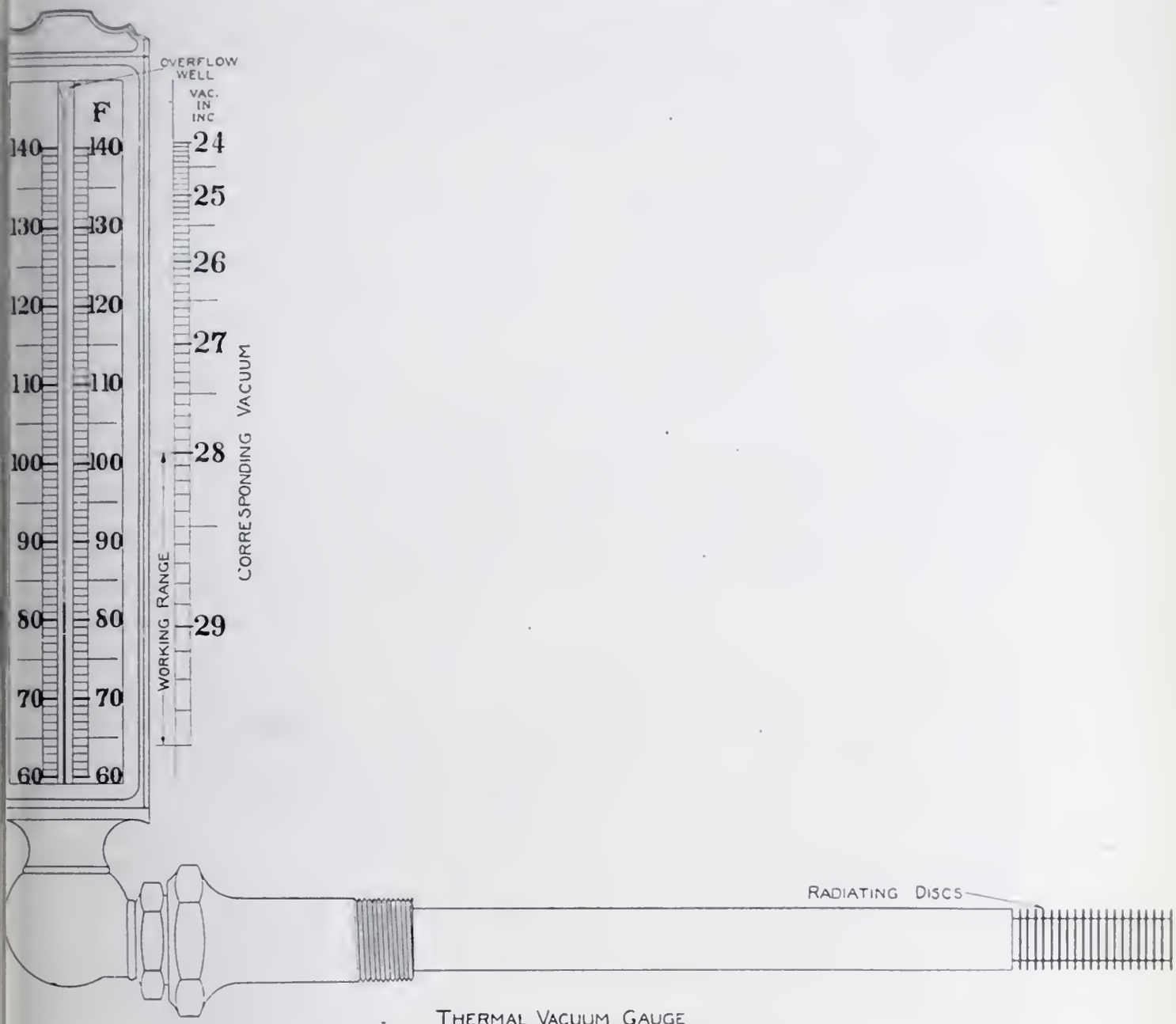

THERMAL VACUUM GAUGE

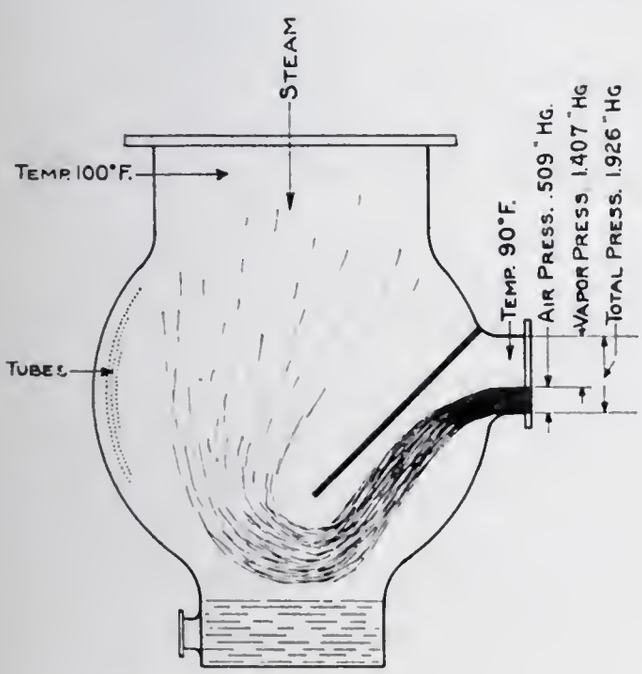

AIR PRESSURE IN INCHES OF MERCURY
CORRESPONDING TO TEMPERATURE DEPRESSIONS
AT AIR PUMP SUCTION

Exhaust Temp	Temp. at Air Pump Suction	Total Press	Air Press	Vapor Press
100	100	1.926	0	1.926
100	98	1.926	.113	1.813
100	96	1.926	.220	1.706
100	94	1.926	.321	1.605
100	92	1.926	.418	1.508
100	90	1.926	.509	1.417

It has been found that the economy of a turbine varies almost exactly with the terminal exhaust temperature, but that each inch of vacuum does not have a definite fixed value.

The main advantage of the use of this thermometer is the elimination of all barometric corrections. As you know, the barometer changes constantly, and in order to make comparisons from day to day, and even from hour to hour, it is necessary, when using the mercury column, to make corrections. I believe that the many corrections required on a mercury column are harder to make and are liable to introduce a greater number of errors than can possibly creep in with the use of thermometers when intelligently placed. The argument that air affects the readings of the thermometers has already been answered by the curve of partial pressures, which shows that at the turbine nozzle the pressure due to air is negligible. A comparatively simple calculation indicates that under extreme conditions of air leakage, the maximum error would be less than .0002 inch. The reason for this is that the steam and air are in motion in the same direction, and that the only air present is that which is being brought in continuously with the steam. On the other hand, in a condenser proper, and particularly on the air-pump, thermometers can and should be used to indicate the presence of air, because at these points the air accumulates, and does build up an appreciable pressure. A comparison of the thermometers on the turbine exhaust nozzle, and on the air-pump suction nozzle on the condenser, will give a very fair indication of the amount of air leakage. The greater the depression in the temperature shown by the thermometer on the air-pump suction, the greater is the amount of leakage. For operating work in connection with large units it is recommended that accurate, indicating mercury thermometers be installed in the air-pump suction in order to give the operators a continuous index to the air leakage. This, of course, should be supplemental to the information obtained from actual air-leakage tests, which should be made periodically. These air-leakage tests can be best made with the use of a gasometer in connection with the reciprocating type of dry vacuum pump. In cases where the hurling water type of dry vacuum pump is used, it is, no doubt, a good investment to install one reciprocating pump and a test air

line in order to be able to make periodic air-leakage tests on the condensers. For continuous operating record, a specially designed recording thermometer, instead of a vacuum gage, should be used for the same reason that the indicating thermometer, instead of a mercury column, is used; namely, the absolute elimination of all barometric corrections, and the fact that much greater accuracy is obtained, particularly at high vacuums.

Mr. Clark: Did you ever use a resistance thermometer?

Mr. J. C. Hobbs: The Detroit-Edison Company tried out the electrical resistance thermometer and had a great deal of trouble with the water of condensation which collected on the resistance wire. I am not sure whether they use them or not. We never tried any ourselves.

Mr. C. M. Hardin:* I would like to emphasize one point mentioned by Mr. Hobbs in his discussion of thermometric measurement of vacuum in the turbine exhaust. In so far as it is physically possible, there should be absolute assurance that the thermometer is effectively insulated from the turbine exhaust casing. This method of measuring vacuum at the turbine exhaust has been tried out very thoroughly by several companies, and it has been very interesting and surprising to note the difference in temperature that the thermometer will indicate when placed at different points in the exhaust, the difference being due to conduction and convection causes other than the temperature of the exhaust itself. Hence to get a true indication of the vacuum, the proper location and insulation of the thermometer should be given careful attention.

There was another point brought out by Mr. Hobbs which should be given due consideration, and that is the cleaning of surface condenser tubes. You gentlemen who have surface condensers know how your men detest cleaning tubes, especially on Sunday, which is the generally accepted time, and furthermore, how often it has to be done. The expense involved, and the dissatisfaction among the employees, are factors in connection with

*Sales Engineer, Westinghouse Electric and Manufacturing Company, Pittsburgh.

a surface condenser installation which should not be overlooked. Recalling a specific instance, I asked a gentleman how often he found it necessary to clean tubes, and he stated that they did not have any regular time, just every two or three weeks, when the vacuum dropped to around one inch less than when the tubes were clean. This one inch in vacuum means an increase in the steam consumption of the turbine of about five per cent., in view of which this condenser was not cleaned any too often.

As to the effective vacuum that a turbine will utilize, five years ago turbines were designed for a vacuum not to exceed 28 inches. Now we are designing turbines for 29 inches of vacuum, which means that the turbine will effectively utilize the available energy in the steam at this very low pressure. The vacuum which a turbine can effectively utilize is dependent upon the turbine blading, particularly the last row. To allow the steam to effectively expand to a certain vacuum, say 29 inches, the last row of blades in the turbine must be of the requisite size, having the proper area to effectively pass the enormous volume of steam that obtains at this low pressure, the specific volume of dry and saturated steam at the pressure of 29 inches of vacuum being 650 cubic feet. In this connection, if the design of a condenser is such that it will produce a 29-inch vacuum, and the design of the turbine blading is such that steam can effectively expand only to 28 inches of vacuum, the extra inch of vacuum produced will be entirely wasted. Therefore, in selecting a turbine and its condenser, this point should not be overlooked.

Regarding the relative amount of power required by jet and surface condensers, it is generally true that the jet condenser pumps require more power than those of the surface condenser. However, this fact in itself should not cause discrimination against the jet condenser. The amount of exhaust steam used in a power producing plant for feed-water heating runs around 12 to 16 per cent. of the main plant steam, and a jet condenser operating under general commercial conditions will not be required to exceed more than five per cent. of the main plant steam. The percentage relationship between the amount of exhaust steam for feed-water heating and the main plant steam varies, depending upon the plant load, as for light loads the auxiliary steam, or

steam for feed-water heating, tends to remain constant, while the main plant steam falls off. To economically take care of this condition in a practical way, a device known as a heat balance valve has been perfected. The valve is located between the steam piping of the feed-water heating system and the low-pressure portion of the main plant turbine. During a heavy load condition there may be a deficiency of exhaust steam for feed-water heating, in which case steam automatically passes from the main turbine to the feed-water heater. Conversely, during light load conditions, there may be an excess of exhaust steam for feed-water heating, in which case the excess steam automatically passes from the feed-water heater exhaust steam supply line to the main turbine, and is utilized in the low-pressure portion of the main turbine.

There is a field for the proper application of barometric condensers. However, for most installations, there is a point that militates against their use. Generally speaking, there is a long exhaust pipe between the condenser and the turbine or reciprocating engine, with a resultant drop in vacuum, which, with the reciprocating engine may not be an economic loss, as the reciprocating engine cannot effectively utilize in most cases as a high a vacuum as the condenser will produce. However, with the turbine, all the vacuum the condenser can produce (if the two elements are suitably matched) can be effectively and economically utilized by the turbine. Hence any drop in vacuum between the turbine and the condenser is a loss directly affecting the coal pile. If the specific plant conditions are such as to warrant putting in a barometric condenser with the turbine, the size of the exhaust connecting piping between the turbine and the condenser should be amply large, so that the steam velocities shall not be excessive, causing a large drop in vacuum.

As to the suction or injection lift for a jet condenser: For safe, reliable operation, the total lift, including pipe friction, should not exceed 18 feet. Theoretically, if a 28-inch vacuum obtains in the condenser, the total lift is between 31 and 32 feet, but if for some operating reason, as occasionally occurs, or if very hot injection water is used in the condenser, the vacuum may not be over 23 or 24 inches, so that to preclude the possibility of the

condenser losing its injection water and shutting down, commonly accepted practice provides that the lift for most commercial installations shall not exceed 18 feet.

With reference to the size of jet condenser that Westinghouse or any other company can build if the design were possible, there isn't any limit. A twin type jet condenser, which has been referred to in the previous discussion as built by Westinghouse, is made up of two separate standard single jet condensers. The largest Westinghouse single jet condenser so far built is one that circulates 13 000 000 pounds of water per hour. A twin jet condenser, embodying two of this size, would have a water-handling capacity of 26 000 000 pounds of water per hour, which condenser, if supplied with 70-degree injection water, will condense 720 000 pounds of steam to a 28-inch vacuum. This quantity of steam is equivalent to that from a 60 000 kw. or larger size turbine. This size turbine is the largest that has been developed to date, and should the future demand larger units, the building of a suitable jet condenser for the turbine is feasible. In connection with the size of jet condenser commercially feasible, the question has been raised as to the limiting capacity of the hydraulic type of air-pump. The above jet condenser having a water-handling capacity of 13 000 000 pounds per hour is equipped with and served by a single Westinghouse Leblanc air-pump.

Regarding the cost of large jet condensers, the unit cost per kw. of capacity decreases with the increase in size, as it logically should as with all power plant apparatus. The query was advanced as to why, if the Westinghouse low level jet condenser was satisfactory as a commercial condenser, did Westinghouse go into the surface condenser business? The reason was because the company realized that there were separate and distinct fields for the proper application of both types of condenser, and furthermore, that the status of the surface condenser development at that time was such as to warrant Westinghouse entering that field. However, since entering the surface condenser field, the application of the jet condenser has not been neglected. This is shown by the volume of jet condenser business obtained, and in this connection the improvement and further development of the jet condenser has been comparable to and correlative with that of the surface condenser.

The discussion in general pertaining to Mr. Pendleton's interesting paper has in some respects been rather critical, but concerning a question of this kind it is practically impossible to avoid this, owing to the differences in opinion and judgment of various parties, depending upon their different viewpoints and their comparative relationship to the subject.

Mr. J. C. Hobbs: In the Pittsburgh district we have always considered surface condensers with suspicion on account of the large quantities of free acid in the water. I would like to have it put on record that there are eight large condensers which have been in service over three years and to date not a tube has been renewed on account of corrosion. A few have been changed on account of being split by the cleaning tools or due to some defect of manufacture, but none from corrosion. We have been agreeably surprised that the water has not been attacking the tubes. The only trouble experienced has been a muddy deposit which takes place if the velocity is allowed to become very low, and which must be removed mechanically.

Prof. W. Trinks:* In spite of the fact that the other speakers have taken up the principal features of the paper, there are a few points left which need additional discussion; one of them is the subject of water velocities.

Mr. Pendleton states that in pumping more water through a given condenser, the work requirements of the pump rise almost as the cube of the water velocity, while there is very little, if any, improvement in the vacuum; consequently, he concludes, increased water velocities offer no advantage whatsoever. This conclusion is wrong. No engineer in the full possession of his mental faculties would expect any noticeable improvement in drawing water at high speed through a condenser designed for low speed, because the increase in the rate of heat transmission, due to higher water velocity, is exactly counterbalanced by the decrease in the time which the water remains in the tubes. One of the earlier speakers mentioned the analogy with the flow of gases of combustion in a boiler flue. No matter how fast we chase the gases

*Professor of Mechanical Engineering, Carnegie Institute of Technology, Pittsburgh.

through the flue they come out with one and the same temperature at the end. Higher velocity does increase the rate of heat transmission, thereby offering to the engineer the possibility of getting along with less heat transmitting surface; but to utilize this physical law we must reduce the cross-sectional area of flow and lengthen the path of flow by building three or four-pass condensers.

The problem of heat transmission in surface condensers was admirably treated in *Engineering* (London), January, 1914. The principal illustration of the article in question was not, to my knowledge, reprinted in American engineering periodicals. For that reason I will ask the Society to reproduce the diagram. The

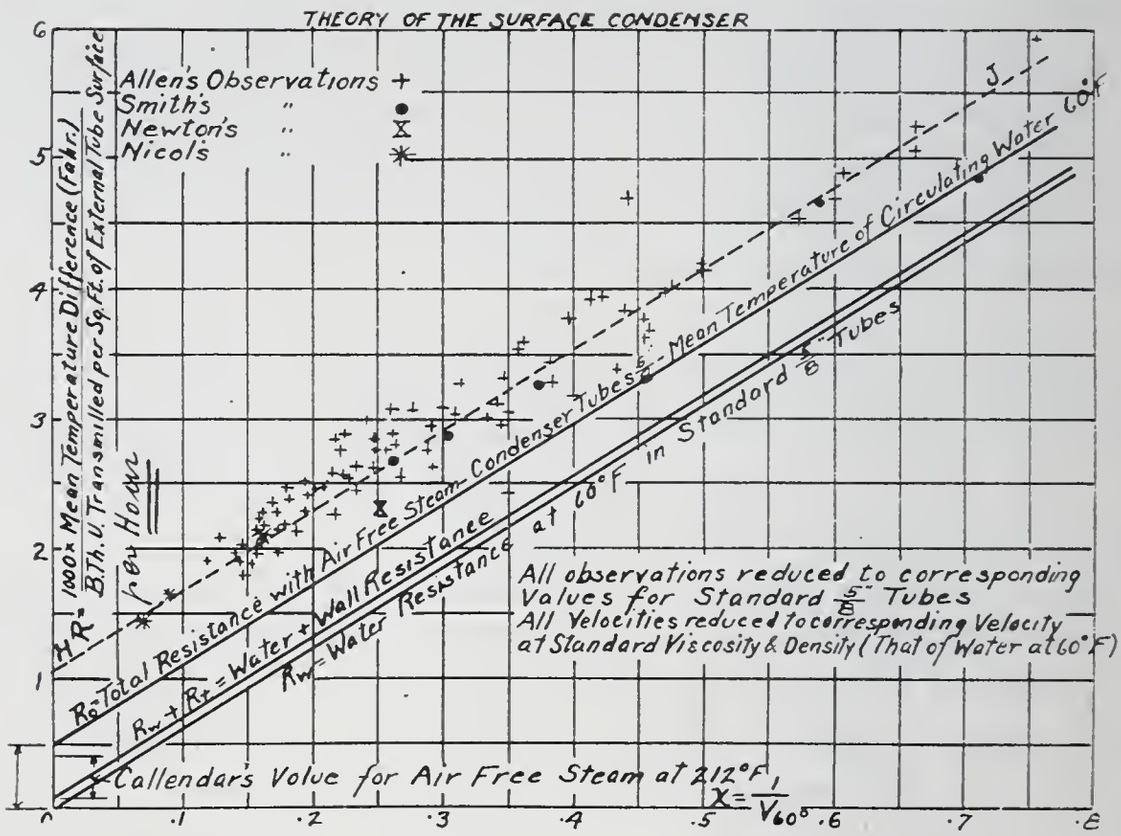

abscissae represent the reciprocal of water velocity, while the ordinates represent resistance to heat flow. The resistance is made up of water-to-wall resistance, resistance through wall, and resistance of wall-to-steam. The latter term varies with the percentage of air admixture. Evidently, increase of water velocity will pay until the water-to-wall resistance roughly equals the wall-to-steam resistance. In average practice this occurs at about five feet per second water velocity. In well-designed and well-

operated plants with exceedingly small air leakage, the limit is reached at about 10 feet per second. The former case corresponds to 400 B. t. u. transmission rate, and the latter case corresponds to 625 B. t. u. transmission rate.

I remember distinctly that when the Westinghouse Machine Company first made guarantees of 600 B. t. u. transmission rate the "Big Four" of the surface condenser builders predicted dire failure, but somehow the above-mentioned company got away with it, and is in the enviable position of knowing just how good or how bad are the design and workmanship of the turbine which discharges into the condenser. Even this figure (600 B. t. u.) is far away from what is possible under exceptionally favorable conditions, Mr. C. A. Parsons having found transmission rates up to 1400 B. t. u.

Regarding the question as to which type of condenser should be given the preference—barometric, low level jet or surface—so much has been said that I need not add anything, except perhaps the statement which is floating around among condenser engineers in the Pittsburgh district: "Never install a surface condenser between the mouth of the 'Yough.' and the birth of the Ohio." The Monongahela River in that section is full of acid and its small tributary, Turtle Creek, is worse. The Westinghouse Machine Company must, of course, have surface condensers for turbine tests. Several of their engineers have made statements to me concerning the influence of Turtle Creek water on their condenser tubes. The consensus of their opinions was that it would pay in this case to line the tubes with gold.

Author's Closure: It was not the writer's intention in this paper to criticize any type of equipment. My object was simply to bring before the Society some of the advantages or disadvantages of various types of condensers, and the fact that conditions in each case should be studied by the engineer so as to determine the best type of condenser for his service. Every engineer should study his own local conditions and determine from these conditions which type is best suited to his individual needs, taking into consideration the vacuum required, and the average vacuum obtainable with each type. A thorough study should be made of the

conditions and source of water, whether from a river having varying levels, a source having a constant level, or a cooling tower or spray system, and whether the water is clear, free from acids, leaves, dirt, mud, etc. The object of this paper is to bring out what is being done in modern condenser practice rather than to criticize any special type.

The reciprocating engine was not dwelt upon owing to the fact that it seldom requires higher than a 26-inch vacuum and would not be brought up under the class of "high-duty." Moreover, steam-turbines are fast displacing the reciprocating engine. It is perfectly true that a barometric condenser can be installed to require no more head than a surface condenser. In fact, the barometric can be installed requiring no pumping head, which is also true of the surface condenser if the water conditions are favorable. The friction loss through a surface condenser is usually from five to eight feet for a well-designed machine. Of course, the static head plus the friction gives the total head on a surface condenser. From this we can subtract the siphon effect in case of a closed discharge. It was said that the velocity through a surface condenser should be at least eight feet as a standard. Possibly this is correct, but 90 per cent. of the power plants which have standard surface condensers are not running at this velocity. The chart shown is a test of a standard surface condenser. Professor Trinks seems to think that this should be omitted, and mentioned the fact that a condenser should be designed with more passes or with longer passes when of the two-pass type. Theoretically he is correct, but in making a four or six-pass condenser, or lengthening the condenser so as to increase the resistance to the desired point when using the two-pass machine, a number of practical points will be sacrificed, and it is almost impossible to commercially adapt such a condenser to a power plant.

Regarding the blading of the turbine: We are speaking of "high-duty" machines, and there should be no turbine considered in any power plant that could not avail itself of the highest possible vacuum obtainable under the conditions. Most engineers in practical work are studying their conditions and applying the condenser best suited to these conditions.

Regarding the use of thermometers and other instruments: This is well understood by condenser operators to be a vital point in any operating equipment.

Regarding the temperature of the condensate: A primary heater in the path of the incoming steam can be so placed as to bring the temperature of the condensate up to the temperature of the vacuum. The temperature of the condensate can be kept very high, in the installation of a standard surface condenser, only by sacrificing some features of the design of the condenser itself, and sometimes the result of this is that the steam lanes are so arranged that a short-circuiting occurs and steam and non-condensable vapors are driven into the air-pump suction or condensate pump suction, causing trouble and a loss of condensate when a hydraulic pump is used; it acting as a small jet condenser.

A jet condenser for all conditions seems to be advocated by Mr. Clark, of the Westinghouse Company, which is one of the largest manufacturers of surface condensers in the country. Mr. Clark stated that the Narragansett Electric Lighting Company has adopted jet condensers owing to the acid condition of their circulating water. This is an unfortunate condition for them, but there is little doubt that tubes could be made to withstand this acid; and if not, the extra power, considering the loss of condensate, would even make up for the loss of the tubes. It is very apparent, too, that other than engineering details determined the selection of these jet condensers. Mention was made of a twin jet equipment recently purchased by a steel company for a 15 000 kw. turbine, for operation on the Monongahela River, and that the jet condenser would not require "much" more power than the surface condenser. For this particular case the purchaser's specifications called for 180 000 pounds of steam per hour, 28-inch vacuum, with circulating water at 70 degrees, and 1000 B. t. u. per pound of steam. The surface condenser in this case called for a circulating pump to work against a 43-foot total head, and to be driven by a 300 horsepower turbine, using 34 pounds of steam per boiler horsepower, non-condensing; the hot-well pump 20 horsepower, at 38 pounds of steam, non-condensing, and the air-pump 40 horsepower, at 40 pounds of steam, non-condensing; or a total of 410 horsepower, and 12 560 pounds of steam

total. This is equivalent to 1050 kw. when based on the same steam rate as the main turbine, namely, 12 pounds per kw. hour. This condenser would require no booster pump. Spare circulating pumps, spare hot-well pumps and spare air-pumps could be installed. The jet condenser would take 277 horsepower, at 30 pounds of steam, non-condensing, for operating the two tail pumps. The air-pumps would require 160 horsepower, at 30 pounds of steam, non-condensing; and a booster pump requiring 157 horsepower, at 34 pounds of steam, non-condensing, would be required to deliver the water to a cold well within reach of the suction of the jet condenser. This gives a total of 594 horsepower, or 18 448 pounds of steam per hour, non-condensing, or the equivalent of 1535 kw. against 1050 kw., or a difference of 485 kw. on the above rating in favor of the surface condenser.

This difference in actual power, the saving by a higher average vacuum on the main unit, the saving of condensate for boiler feed and the reliability of service in this case surely make the surface equipment more advisable than a jet from a strictly engineering standpoint, and show that it would amply pay fixed charges on the extra cost, and fixed charges for depreciation and renewal of tubes, etc., if necessary. Surface condensers are in operation on the Monongahela River near this plant, and have been in service for 10 or 11 years, with very little tube trouble.

Another question was asked regarding the use of cooling towers with surface and jet condensers. In all cases where a surface condenser is provided with a cooling tower, it is so proportioned that the water quantity is based on a five-degree difference, thus using the same quantity of water as the jet. Therefore, a surface condenser when operating with a cooling tower would have approximately a 30-foot head for the tower alone, plus friction through the condenser and system, which we will assume to be 10 feet, or a total of 40 feet. The jet condenser will have the same cooling tower head plus the static lift from the water discharge nozzle of the condenser to the cooling tower level, usually not less than 15 feet, and in addition to this a vacuum back pressure of at least 30 feet. Eliminating the friction, we have 75 feet for the jet and the same quantity of water. The circulating pump on the surface condenser, when properly designed, can be figured

at an efficiency of 75 per cent., making a total net operating head of, say, 56 feet. Assuming, as has been claimed, that a tail pump on the jet condenser will have an efficiency of 60 per cent., with a 75-foot head, a total operating head of 125 feet would be required; though, as I claim, an efficiency of only 50 per cent. should be allowed on the tail pump, and the operating head would then be 150 feet. If the tower were designed for 4000 gallons of water per minute, the above figures would represent the horsepower on the pumps alone.

Regarding comparative figures as to the cost of a jet with a cooling tower and a surface machine with a cooling tower, the tower is the same for both; the jet condenser being about one-half the cost of the surface condenser.

The discussion by Mr. Hobbs was very clear and concise and, I am glad to say, covered the subject much more in detail than the writer attempted to do. In the question of the water velocity, however, he has taken as authority the Prime Movers Committee report of the National Electric Light Association. Unfortunately, this statement in the report was very general, and I do not believe represented the majority of plants in operation today.

Regarding the heat contained in each pound of steam, this is as a matter of convenience usually assumed to be 1000 B. t. u. total. Owing to the lack of figures as to the efficiency of the turbine, the quality and pressure of the steam entering the turbine, and other details, it is often impossible to determine exactly what amount of heat remains in each pound of exhaust steam. It has therefore been found convenient to assume 1000 B. t. u. per pound of steam.

Mr. Hardin's remarks covered the same points as those of his predecessor, Mr. Clark. He also advocates the use of a jet condenser regardless of conditions, and in his verbal discussion advised us that the Westinghouse Company went into the surface condenser business because they realized it was a mighty "soft proposition." Probably he meant their competition. The example given by Mr. Hardin, of 720 000 pounds of steam per hour when using 26 000 000 pounds of water per hour for a twin jet condenser, is very interesting. At 28-inch vacuum, with 70-degree water, the temperature rise in this quantity of water

would be 27.7 degrees, assuming 1000 B. t. u. per pound of steam; this being within 2.3 degrees of the vacuum.

The intermingling of 360 000 000 heat units with 13 000 000 pounds of water so as to obtain this efficiency would require a condenser head and spray nozzles, or trays, that would be most impractical from a mechanical standpoint; and a tail pump to handle 26 000 gallons of water per minute most surely is not practical. The question of connecting such a machine to a turbine, foundations or cross-connecting the auxiliaries, and other details, also make this decidedly impractical. However, assuming that this would be possible, the tail pump at 60 per cent. efficiency would require 833 horsepower, and at 50 per cent efficiency would require 1040 horsepower. The air-pumps would require 450 horsepower additional. For a surface condenser at a 15-degree difference, 89 000 gallons per minute, instead of 52 000 gallons per minute, would be required, which at a 20-foot pumping head and 75 per cent. efficiency would require 593 horsepower. The hot-well pump would require 30 horsepower and the hydraulic air-pump 225 horsepower additional, making a total of 848 horsepower, as against 1285 or 1490 horsepower for the jet. Spares could be furnished for the surface auxiliaries, while the jet pumps would have to be arranged in pairs, with no possible chance of spares, except the booster pump. The first cost of the jet, including the exhaust nozzles, extra foundations, etc., for the turbine and booster pump would be very close to the cost of the surface equipment. I thoroughly agree that the jet condenser has not been neglected during the past few years, this being due principally, I think, to the high cost of surface condensers.

Professor Trinks criticizes my statement that there is little, if any, improvement in vacuum or heat transfer due to increased velocity. Theoretically, there should be an improvement in heat transfer, but practically the disadvantages, due to increasing the velocity, so overbalance the advantages that we can see no reason for materially increasing the velocity. The question of heat transfer in surface condensers has been widely discussed, and in all the tables herewith shown the heat transfer has been figured at approximately 300 B. t. u. heat transfer per square foot per mean degree difference. Three hundred and fifty B. t. u. is, I

believe, now standard engineering practice. Some manufacturers recommend as high as 400 or 450, or even 500. Proportionate reductions in the surface will be made as the rate of heat transfer is increased. In a well-designed and well-laid-out surface condenser the purchaser certainly has a greater margin of safety with the surface based on 300 or 350 B. t. u. heat transfer than with a higher rate.

It is interesting to note that the Westinghouse Company has sold 75 large jet equipments during 1916, but I do not believe that the Engineers' Society is the place to discuss commercial achievements, and I have no doubt that other condenser manufacturers could give equally interesting lists of sales.

Mr. Clark's remarks as to the comparative performance of jet and surface condensers are not consistent with practical or even theoretical ratings of jet or surface machines. His figures were very vague, and we do not conclude from his statements that a jet condenser log shows as good results as a surface condenser as far as actual vacuum obtainable is concerned. The operation of the surface condenser as regards tube cleaning, etc., is part of a power-plant attendant's duty, as well as boiler cleaning or any other work necessary in any well-regulated power plant, and where the men are properly treated and have the proper spirit there should be no question as to their duty in looking after such equipment.

Mr. Hardin acknowledges that his discussion in general has been rather critical, and I am glad to say that some of his points were very well taken. Others, however, were not based on engineering facts, but were merely general assumptions, which in some cases are misleading.

RADIOTELEGRAPHY AND RADIOTELEPHONY

By S. M. Kinter*

Almost exactly 16 years ago I had the honor of reading a paper† before this Society on the then very new art of "wireless" telegraphy.

That paper was illustrated by certain experiments, or demonstrations, of "wireless" transmission over very short distances, in fact within the limits of the Society's rooms. These demonstrations, together with a statement of what was being accomplished in the practice of the art, in so far as it could be considered to have a practice, caused considerable interest, although ranges of only 100 miles or so had then been covered. To-day no surprise is occasioned by news of a successful transmission of 5000 miles and I find the difficulty of my task of writing an interesting paper correspondingly increased.

It is only when we are first introduced to a new art that we, as laymen, have much interest in its *modus operandi* and the underlying theory, unless, of course, we view it with more than simply a passing interest. This fact again adds to my difficulties and I fear that this paper would not have been written but for the interest that I hope to be able to give to it by a brief description of the part that "wireless," or radiotelegraphy as it is now called, is playing in the present great war.

SOME FUNDAMENTAL PHENOMENA

It is essential, however, in order that a proper understanding of what follows may be had by those unfamiliar with radiotelegraphy, that a brief sketchy outline of some of the fundamental theory be given:

1. Electric circuits, under proper conditions, behave in a manner exactly analogous to mechanical oscillating arrangements. For example the balance wheel of a watch, with its supports of minimum friction and its spring attachment is a fine analogy to an electric circuit having inductance, (which supplies the electric

*General Manager, International Signal Company, Pittsburgh.
†Proceedings, 1901, v. 17, pp. 75-104.

inertia effect corresponding to the mechanical inertia of the balance wheel) slight electric resistance, (which corresponds to the slight friction in the mechanical analogy) and capacity (which corresponds to the spring in the balance wheel analogy). The laws of the two arrangements are almost exactly the same. For instance to increase the period of the oscillations, the inductance, or the capacity is increased in the case of the electric circuit, while the mass of the wheel, or the elasticity of the spring is increased in the case of the mechanical arrangement.

2. The phenomenon of resonance is of great importance in radiotelegraphy. Resonance is that phenomenon, with which every one is familiar in some form or another, which consists in adjusting the natural period of oscillation or vibration of some elastic body until it is the same as that of some regularly recurring exciting force. Think for instance, of the properly timed pushes given to a child's swing; the frightful swaying, if not actual destruction that results from soldiers marching in step across some bridge; or of the "blast" that is so objectionable to the listener in some of the high pitched notes of the soprano as reproduced on a phonograph. These are typical illustrations of this important phenomenon.

3. The phenomenon of electromagnetic wave radiation is of prime importance in this art. It has been observed that electric circuits, of proper form, and having electric surgings, or oscillating currents in them, have the property of sending out electrical energy which radiates from them as does light from some incandescent source.

We need not concern ourselves in this paper with the theory of how this radiated electrical energy detaches itself from the radiating conductor, nor yet how upon striking against an electrical conductor, it is converted back to an oscillating electric current. These are both extremely interesting phenomena about which there has been much theorizing but regarding which there is little exact information. For our purpose the radiating conductor can be thought of as similar to a source of visible light. As a matter of fact both types of radiation employ the same medium of propagation and have the same rate of travel. Their principal difference is one of wave length, the light wave being

of the order of 1/50 000 of an inch, whereas the electromagnetic wave in common use is 600 meters in length; that is, more than a million times as long. The rate of propagation of light waves and of electromagnetic waves for radiotelegraphic signaling, is 300 000 000 meters per second, or approximately 186 000 miles per second. Both types of waves are subject to reflection, refraction, polarization and interference, although practical use is seldom, if ever, made of these capabilities of the radiotelegraphic waves, owing to the practical difficulties involved in the construction and manipulation of mirrors or lenses of sufficient size to be useful with these long waves.

It was stated in the beginning of this discussion that electric circuits *of proper form* would radiate. A straight copper wire is an excellent radiator. A circuit consisting of a straight copper wire is ordinarily thought of as an open circuit in which no current can flow. But when alternating or oscillating currents are employed, a straight wire is not an open circuit for such currents, as the several parts of the wire have a capacity for storing electric charge, and hence the current surges back and forth. The fact that the wire is a straight one causes the lines of electrostatic force, connecting the two charges of electricity of opposite polarity, to reach out over a broader area than would be the case if the wire were bent so as to have its ends approaching each other. This condition of spreading of electrostatic lines causes the aerial to be a good radiator, and conversely an aerial which does not have a spreading of the electrostatic lines is a poor radiator.

Fig. 1 is an illustration of the good radiator type of aerial, while Fig. 2 shows an arrangement of the poor radiator type. P and P′ represent the two plates of the condenser, and L the inductance in each of the two figures. The dotted lines represent the electrostatic flux lines.

If, then, a good radiator is at hand, all that is required is to supply it with the proper exciting current in order to have a radio transmitter. A proper exciting current is one whose frequency of oscillation is the same as the natural frequency of the radiator. The natural frequency of the radiator is that frequency of oscillation which a current would have if the radiator

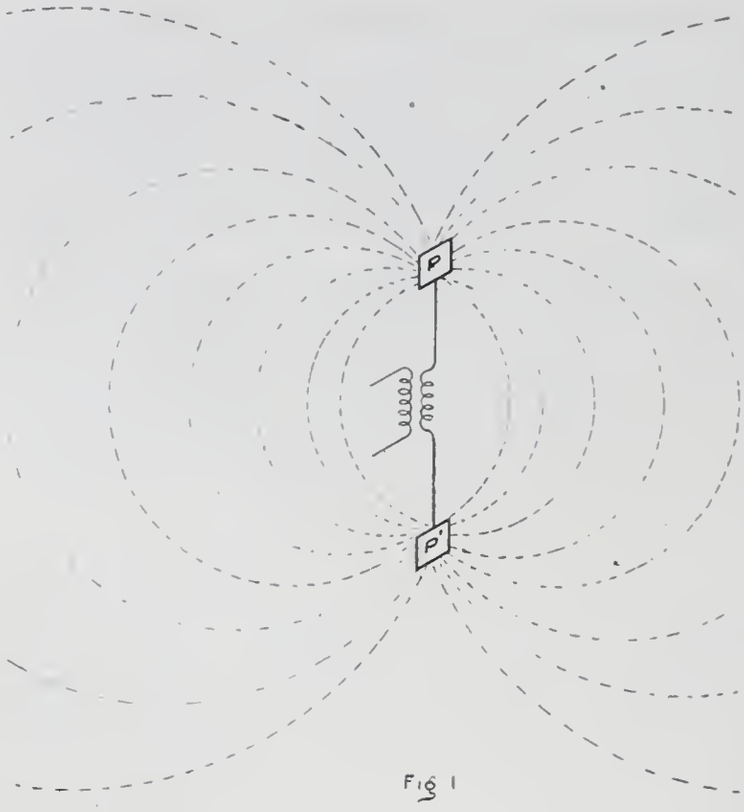

Fig. 1. Good Radiator Type of Aerial.

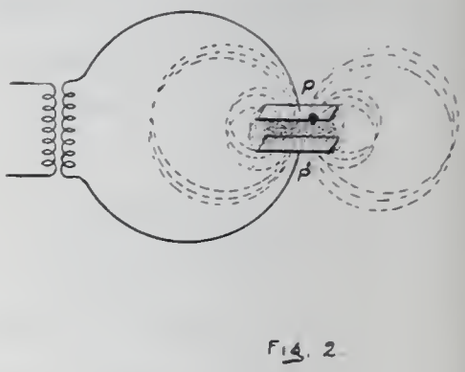

Fig. 2. Poor Radiator Type of Aerial.

had a charge of electricity whose balance was disturbed and the oscillating currents were passing back and forth in attempts to re-establish the electric balance of the radiator system. Such a condition is one of resonance. Unless the exciting source is resonant to the radiator it will not be able to provide more than a very feeble oscillating current in the radiator and hence but a very feeble radiation.

RADIOTELEGRAPH TRANSMITTERS

High Damping Radiator. The earliest type of radiator exciter was that employing the high frequency oscillations resulting from the discharge of a charged condenser. This apparatus was used for the reason that extremely high frequencies of discharge were employed and no other method was then known for securing them. It was also thought in the early days that the "snap" or "whip-crack" effect of the condenser discharge was an essential in securing the radiation. As the radiation varies directly with the fourth power of the frequency, another reason for employing the extremely high frequencies is apparent.

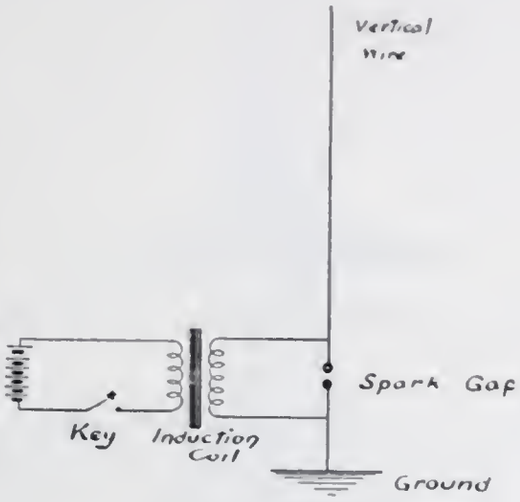

Fig. 3. Marconi's First Type of Aerial.

The earliest radiator known consisted of a straight horizontal rod of only a few feet in length. The frequency of oscillation was extremely high owing to the small values of the inductance and capacity in the circuit of discharge. The frequency of oscillation varies inversely as the square root of the product of inductance and capacity. This early type of radiator never had any practical application in radiotelegraphy, although it suggested the possibility of such an art. The earliest form of radiator used in practical telegraphy consisted of a vertical wire with the lower end connected to earth. It was with that form, as shown in Fig. 3, that Marconi called attention to the commercial possibilities of radio signaling.

The amount of energy that can be radiated with this circuit arrangement depends upon the amount that can be stored in the wire before it is released and allowed to oscillate and hence to radiate. The quantity of charge that can be stored is limited by the insulation of the wire supports and also by the breaking down of the dielectric strength of the air surrounding the wire. These insulation failures act as a barrier to any further material increase in the energy that can be stored. Additional storage can then be secured by increasing the size of the wire, or by increasing the number of wires employed.

The radiator or aerial of the early types was charged by means of an induction coil whose discharge terminals were connected directly in the aerial circuit. The resistance of this spark

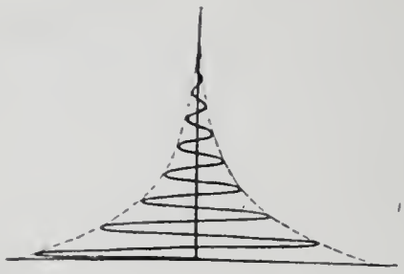

Fig. 4. Highly Damped Wave Train.

gap, however, causes excessive losses in the stored energy as the charge oscillates back and forth across it, and so causes the oscillations to die out after a comparatively few waves have been radiated.

This condition of gap resistance introduces another limit to the voltage that can be employed, for if the gap is too long and has too much resistance, the charge will not oscillate and hence there will be no radiation. The voltage then, can never be increased beyond the voltage breakdown value of a gap length which has a resistance sufficiently low so that a reasonable amount of oscillation of the charge takes place for each breakdown of the gap. The resistance of such a discharge gap is practically infinite before discharge, but once started, the metallic vapors of the discharge lower it very much and the subsequent high frequency oscillations pass across by means of the conducting vapors. The vertical wire then, for the time being, has no gap, but simply a change in the form and resistance of the conductor. Besides its limited power, this form of radiator has another serious defect; the rapid dying out of the oscillations, as shown in Fig. 4.

This rapid dying out of the oscillations makes tuning of the receiving circuits practically impossible. However, in the early days when there were so few stations, "tuning out" of other stations than the one desired was a condition that did not often arise. Furthermore the type of detector employed at that time was most effective when used with the rapidly decaying wave trains. The detector used was the coherer, which was a trigger device, and the large amount of energy in the first half-wave operated the coherer and all energy in subsequent waves of that train were of no avail.

Fig. 5. Wave Train of Maximum Damping Permitted by Law.

Persistent Radiators. To Reginald A. Fessenden, at one time a resident of Pittsburgh, a member of this Society, and for a time its Secretary, belongs the credit of pointing out the impracticability of the system just described, and which system is generally accredited to Marconi as the originator, and also of pointing out the way along which success could be secured. His basic idea was that to be successful the detector must operate and give response proportional to the total energy received. This was in marked contrast to the coherer which, when tripped by the first part of the wave train, gave the same response for strong signals as weak ones, provided only that the weak signals were of sufficient strength to operate the coherer.

This change in the type of detector, or receiver, brought about a radical change in the transmitter so as to make it better suited to the new receiver. This change consisted in securing wave trains with less damping of a form such as illustrated in Fig. 5.

A wave train such as that illustrated represents one of the maximum damping now permitted by law. The factor $\delta = 0.2$, known as the logarithmic decrement, is the natural logarithm of the ratio of two successive amplitudes. This ratio remains constant for the successive decreasing amplitudes and is a measure of the damping of the oscillations. The larger the decrement the greater the damping and the fewer the number of oscillations to each wave group or train.

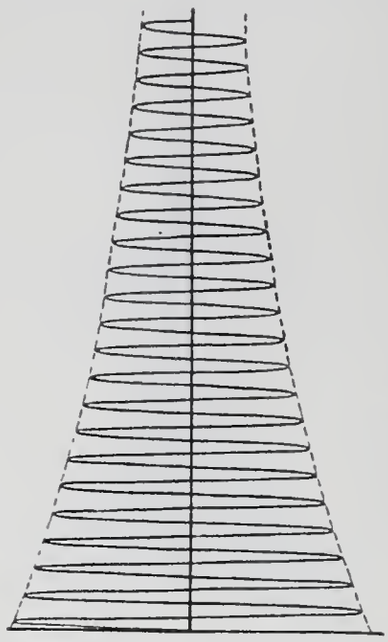

Fig. 6. Wave Train of Considerable Persistence Typical of Present Practice.

This limiting value of decrement was fixed by law in an effort to reduce the interference between stations and enable the station to select its desired one and exclude all others. Stations of materially greater decrement than 0.2 cannot be "tuned out" as they "come in" upon most any adjustment of the receiver throughout its practical range.

Transmitters were devised which sent out wave trains of the character illustrated by Fig. 6. This more persistent form of wave train was secured by reducing the resistance losses in the radiator and further by storing large quantities of electric charge in associated, so called, "tank circuits," which fed the aerial with energy as it was radiated.

These associated circuits were in most cases connected to the radiators by means of Tesla transformers. Tesla transformers are well known to all electrical workers as two-coil transformers without iron cores and having as a prime requisite, an accurate tuning of the two circuits to the same frequency; that is, they are made resonant. This coupling arrangement of the tank and radiator circuits was not without its difficulties, however, as it was soon discovered that the waves radiated were not of a simple form of a single frequency. On the contrary there were apparently two frequencies radiated, and the receiving mechanism could be adjusted to either one, but of course not both, and thus a large part of the received energy was wasted.

It was found that these two frequencies could be made to approach each other by increasing the leakage between the two coils of the Tesla transformer, and thus reducing the rate of transfer of energy from the primary to the secondary coil. This proved to be a fairly satisfactory arrangement and it was used to a considerable extent in practice.

Quenched Gap Radiators. Max Wien, a German scientist, as the result of an investigation of this phenomenon, proposed the use of a form of spark gap in the "tank circuit" which would stop, or "quench" the spark discharge more quickly, and which would then allow the use of a close coupling of the two circuits. This arrangement then causes a rapid transfer of energy to the radiator and a "dropping out" of the primary or tank circuit which insures the radiation of all energy in waves of a single simple frequency. The illustrations Fig. 7, 8 and 9 are intended to illustrate the several conditions just discussed. Fig. 7 shows a circuit arrangement in which the radiator A P′ E is closely coupled to the primary circuit C G P. The gap G is the ordinary

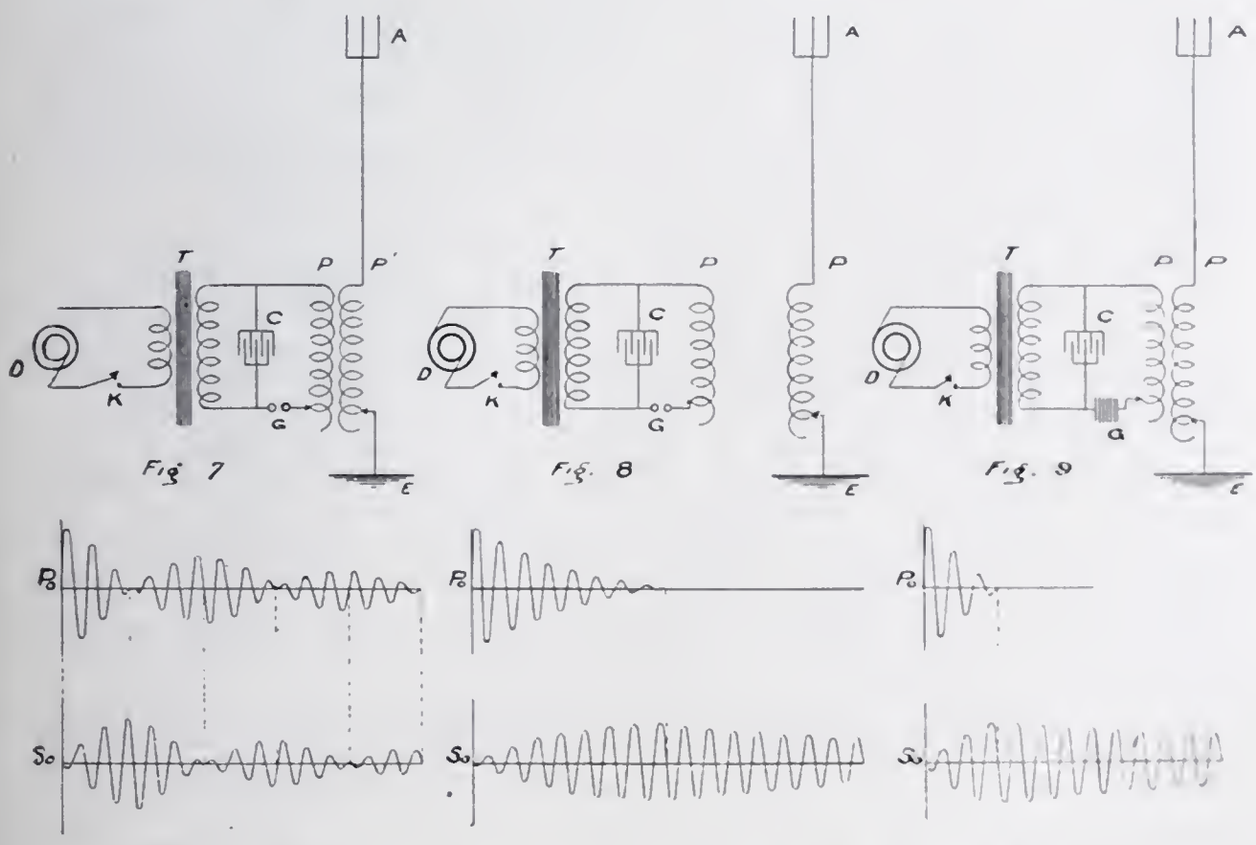

Fig. 7. Close Coupling, Ordinary Gap with Circuit Reactions.
Fig. 8. Loose Coupling, Ordinary Gap, with no Circuit Reactions.
Fig. 9. Close Coupling, Quenched Gap, with no Circuit Reactions.

non-quenching type. It will be observed that the oscillations P O in the primary circuit die down very quickly due to the rapid transfer of its energy to the secondary and that they increase later due to a retransfer of part of that energy from the secondary back to the primary. Thus the radiator is changing from the condition of driven to driver and back again. This transfer of energy back and forth between primary and secondary results in the production of beats, as shown in Fig. 7, where the upper set of curves represents the primary oscillations in the tank circuit C G P, and the lower curves the oscillations in the radiator A P′ E. This results in the radiation of what amounts to waves of two frequencies. It also greatly reduces the efficiency of the arrangement as the stored energy is forced across the spark gap G a greater number of times than it should be and the gap resistance causes a loss of energy in the production of useless heat.

The arrangement shown in Fig. 8 obviates, in a measure, most of the difficulties experienced with the Fig. 7 connections. They differ solely in the coupling of the two circuits. The separation of the coils P and P′ is increased, or a smaller number of turns used, so as to reduce the rate of energy transfer from the primary to the secondary circuit, and by so doing, give the gap an opportunity to re-establish itself and thus prevent the "feeding back" of energy from the radiator to the tank circuit.

Fig. 9 illustrates the quenched gap arrangement which differs from that shown in Fig. 7 only in the use of the quenched gap. The use of a number of gaps in series, each with massive electrodes, enables the gap to smother the discharge more quickly and thus allows the use of the closer coupling and quicker energy transfer, as the gap interrupts the primary circuit before the energy can be fed back from the secondary. The wave trains in both Fig. 8 and 9 illustrate the difference in the rate of energy transfer and the lack of "feeding back" such as is shown in Fig. 7. This quenched gap type of transmitter is the one that is most generally used to-day in all small-powered installations such as those aboard ships and the shore stations for operating with them.

In practically all radiotelegraphic work since 1905 the receiving has been done by sound in a telephone at the operator's ear. The receiving operator hears, not only the signals from the desired station, but hears a great number of sounds due to "static," and possibly other near-by stations which have nearly the same wave length or which are in bad adjustment. Fessenden proposed a method, which greatly benefited the receiving operator in distinguishing the desired signals from the false ones, by so constructing his transmitter that it gave a large number of spark discharges per second which were equally spaced. This resulted in the production of a clear musical note easily distinguished from atmospherics and from other interfering stations, unless these latter happened to have exactly the same spark frequency and wave length and their signals were of equal strength. This high-frequency musical spark method is now in almost universal use wherever spark transmitters are employed and has enormously increased the reliability of radio signaling. Fessenden employed a rotating spark gap which was driven synchronously with the alternator and insured a very accurate recurrence of sparks. In this respect the synchronous rotary spark gap is superior to the quenched gap as it is much simpler to keep in adjustment for a pure musical tone. In so far as any gap departs from regularity in its discharge just by that much is it inferior to one of regularity, as its spark note has a fuzzy sound which, as it increases in prominence, tends to merge the signal from it into the chaotic and irregular noises of the atmospheric disturbances, generally referred to in the art as "static."

Efforts to secure regularity of discharge with quenched gaps have resulted in great refinements of construction. The latest gaps are built with sterling silver sparking surfaces, with gap lengths of from 10 to 25 thousandths of an inch, the adjacent plane surfaces being parallel to within a fraction of a thousandth of an inch. The discharge surfaces are enclosed in air-tight compartments of as small dimensions as possible, thus the discharge takes place in an inert gas.

Fig. 10. Quench Gap Plate—Front View With Sparking Surface Disc of Silver in Center—Back View of Plate Without Center and "Fish Paper" Gasket.

Fig. 10 shows a type of quenched gap construction which is very satisfactory in service.

The several gap plates are spaced apart and insulated by "fish paper" gaskets. The metal upon which the silver in this gap is mounted is an aluminum alloy and has no function other than a mechanical support and heat conductor to assist in keeping the sparking surfaces as cool as possible. The several gap plates are clamped together with insulating rods along the sides thus insuring their alignment.

Fig. 11 (Photograph of one-half kw. set) shows a typical quenched gap assembly as seen from the front of the panel. Fig. 12 is a side view and from this the construction of the oscillation transfomer can be seen to consist of copper ribbons wound edgewise and supported on fiber strips with notches to insure proper spacing between turns.

Continuous Radiator. Passing from the spark-type transmitters we will next consider the sustained, or continuous-wave transmitters. Again we are indebted to Fessenden for pointing the way to that method of signaling. There is needed only the development of a generator of short waves to make this the universal system, as it is now preferred wherever generators of the necessary wave lengths are available. It is the system used at the Sayville and Tuckerton stations and with it splendid service was secured prior to the breaking out of the war, in working directly with stations in Germany.

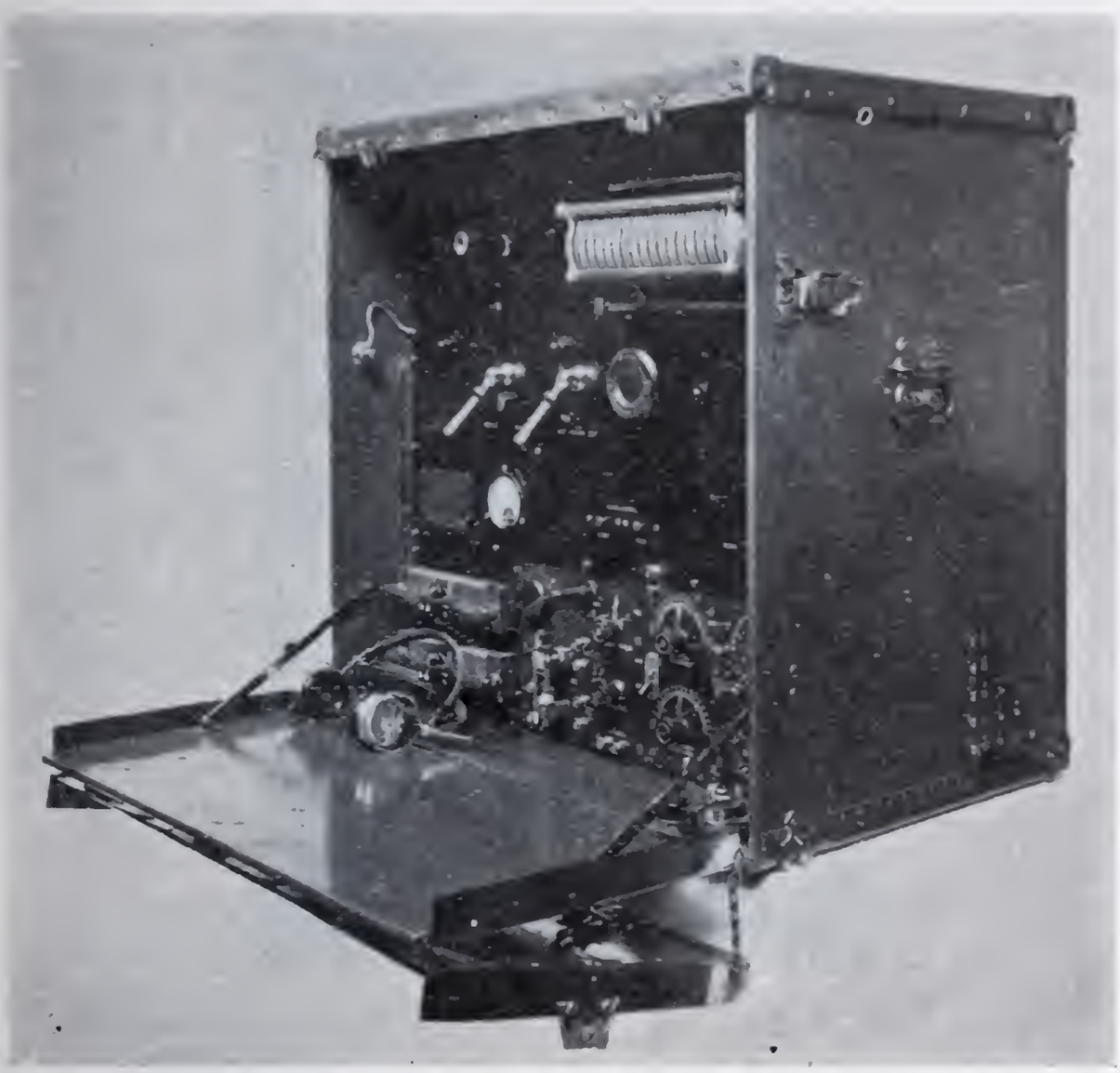

Fig. 11. Typical Semi-Portable Spark-Type Sending and Receiving Set.

At the time Fessenden proposed to signal by connecting one terminal of a high-frequency alternator to the aerial and the other to ground, the idea was ridiculed by no less an authority than Fleming, the technical adviser of the Marconi Company. Fessenden also suggested that alternating current generators of other types could be used and later it was discovered that an arc between electrodes of copper as the positive, and carbon as the negative, could be made to develop oscillations, and that method has attained a considerable degree of success in practical operation. This type of oscillation generator was placed directly in the aerial circuit and the signaling accomplished by changing the wave length instead of actually cutting off the power as had been the practice with the spark-type transmitters.

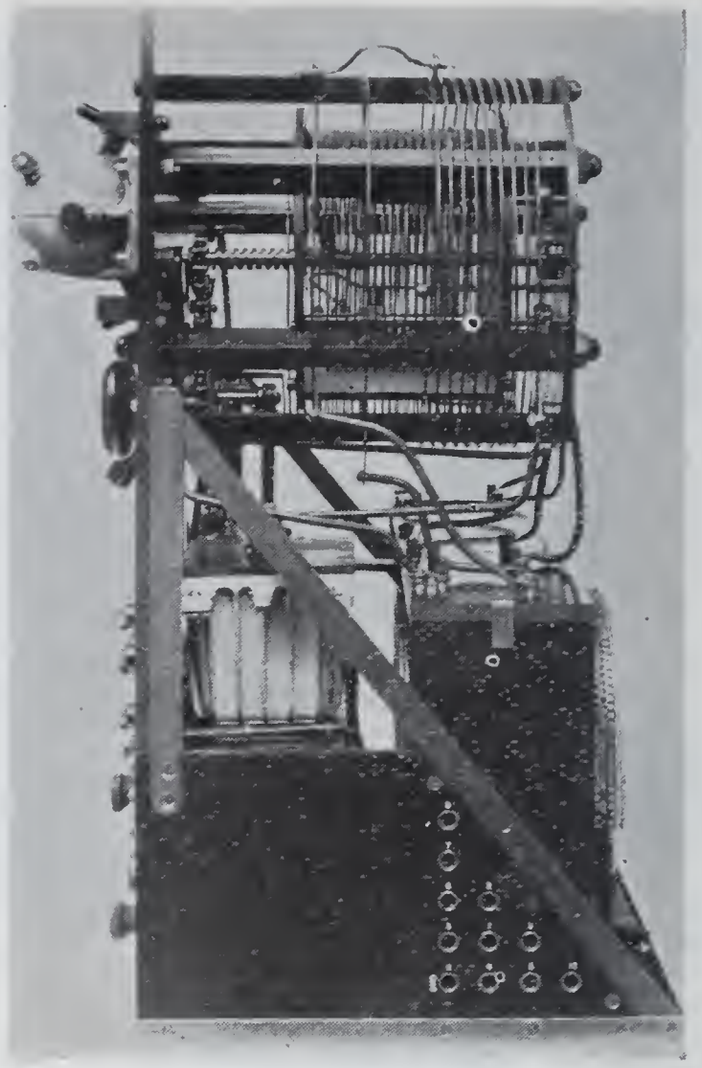

Fig. 12. Side View of Semi-Portable Set With Case Removed.

The oscillating vacuum tube is another type of oscillation generator, but this type has not been developed to the point where any considerable amount of power can be taken from it. When further developed it will doubtless be very generally used owing to its purity of radiation, ease of wave-length adjustment, and quiet operation.

The continuous-wave transmitter is preferred owing to the improvement in tuning which it makes possible, and owing also to the fact that it is best suited to the most sensitive and reliable form of receiver ever devised.

For long-distance signaling, such as transatlantic operation, machine generation, either directly or through frequency transformers, is the preferred form and gives results superior to the high powered arc. However, owing to the ease in change of wave length and the rugged character of the arc mechanism, the latter is preferred for military purposes. The arc transmitter

does not give as pure radiation as the machine type and as a result causes serious interference with near-by receiving stations.

This is not the case with the machine generation and ships receiving on short wave lengths can pass within a few miles of a transatlantic station without knowing the big station is operating. This is of great importance in practical work. It renders duplex operation much easier as the receiving aerial can be placed so much nearer the transmitting station without interference from it. In duplex operation two aerials are used and messages are sent continuously from one and received continuously from the distant station on the other. These two aerials are separated by a distance of 20 or 30 miles and if the tuning of the circuits and the use of slightly different wave lengths is not sufficient to eliminate the local transmitting station's signals from its companion receiving station, sufficient energy can be "picked up" by a small aerial erected for that purpose which will "buck" out the remaining part.

Telephony. Radiotelephony differs from radiotelegraphy principally in the means of controlling the radiations from the transmitting station. There is absolutely no difference in the receiving station.

The transmitting station requires a substantially continuous stream of radiation whose characteristics are changed in direct response to the sound wave influences. Just as telephony on a wire is accomplished by a microphone transmitter which increases or decreases the strength of an electric current passing from speaker to listener in almost exact step with the sound waves of the speaker, so radiotelegraphy operates by a modulation of its equivalent wire current, that is, its radiations. No very satisfactory means of accomplishing this modulation is available for stations of considerable power, although no great difficulty is experienced in effecting satisfactory operation over short distances of 10 or 15 miles with the small powers required.

The simplest connection is one employing an ordinary telephone transmitter directly in the aerial circuit, but such an arrangement is capable of controlling only very small powers. This limit is due to the heating effect of the oscillating current,

all of which, in this arrangement, passes through the microphone transmitter. The largest microphone transmitters are capable of operating with one-half ampere of current as an upper limit. A radio transmission of 100 miles requires approximately five or six amperes and this would burn out such a microphone. A number of schemes have been proposed by which use could be made of the microphone with its normal current and the result utilized to control the radiations through some secondary means. None of these plans has met with much success and the art stands to-day waiting for the invention of a suitable modulator.

The radiations can be produced either from a generator of continuous or sustained waves or from a high-spark frequency generator, provided in the last instance the spark frequency is above 4000 sparks per second and the discharge is regular in its time spacings, and further that the wave trains are persistent. The first of the above methods of generation is preferable.

RADIO RECEIVERS

Let us turn away from the transmitting stations for a hasty consideration of the receiving stations.

It is a long step from the early coherer type of receiver to the modern "heterodyne" type. Both sensitiveness and reliability have been increased many fold.

Coherers. The coherer was simply a bad contact in the circuit and when a wave of sufficient intensity arrived it caused the gap in the circuit to momentarily close and thus permit a local battery to operate a sounder and indicate in this way the arrival of some signal. The coherer gap had to be restored to its receptive condition by a mechanical jar, or tap. The signaling was slow and uncertain and it was impossible to judge of the distance of the transmitting station or of any of its transmitter characteristics.

From the coherer we pass to the magnetic, or hysteresis type of detector. This was used for a number of years by the Marconi Company.

Liquid Barretter. Next the liquid barretter detector of Fessenden came into general use and supplanted all others. It was an extremely sensitive device and very certain and regular in its action. A telephone receiver was used as its indicator and one actually heard the characteristics of the transmitting station so accurately that it was possible to tell one sending station from all others by little differences in the spark sounds, and some operators could even recognize the touch of the sending operator by little individual peculiarities in his sending. This detector acted as a rectifier of the high-frequency currents received and so the energy that moved the telephone diaphragm was actually transmitted from the distant station.

Crystal and Gas Valve. The enforcement of patent rights in this detector created the necessity that resulted in the discovery of crystal rectifying detectors and of gaseous rectifying detectors. The simplicity of the former and the marvelous sensitiveness of the latter has brought about the general abandonment of the liquid barretter in favor of the two last mentioned. These detectors are the ones generally employed in practically all radio stations at this time. The crystals, of which there are a great number of good ones, are used where ruggedness and simplicity are of prime importance and the gaseous or vacuum tube type where extreme sensitiveness is desired. Telephone receivers are used with both types, this in fact being the almost universal practice with all forms of radio detectors in use at this time. Receiving stations operating with spark-type transmitters receive sounds which resemble very closely the sound one would hear if present at the transmitting station and listening to the spark discharge, though of course the received signal is not so loud. In the best practice now a musical spark of approximately 1000 sparks per second is employed. It has been found that this kind of a spark best suits the ear and is most readily distinguished from the "static" sounds often heard. With the sustained-wave generators something more is needed to make the incoming signals audible. The frequency used is generally of the order of 40 000 or more cycles per second, thus being far beyond the range of audibility. Interrupting devices at the transmitters and also at the receivers, have been used with more or less success. These devices by cut-

ting the radiation up into groups, imitate the condition of the spark-type transmitters and hence make the signals audible.

Heterodyne. The heterodyne receiver is, however, so far superior to either of the types just mentioned that it is the one now used almost exclusively. It is also the result of Fessenden's work and is in reality his most important invention. This receiver makes the incoming high-frequency oscillations audible by combining them with another set of oscillations, generated locally, of a slightly different frequency. This results in the production of interference beats, and by making these beats sufficiently rapid a pure musical tone is produced having a pitch of the beat frequency. To appreciate the value of such an arrangement one must realize that no other station can interfere with the receipt of the desired messages unless it has exactly the same frequency as that of the station sending the messages it is desired to receive. All other frequencies will produce a different tone which unless near the frequency of the desired station, will be beyond audible range. Furthermore the receiving operator can adjust the frequency of the local source until it is the same as that of the interfering station and thus render it inaudible, or he can increase or decrease the local frequency and change the beat frequency and thus crowd the interfering station out of range. Further than this a considerable degree of signal amplification results without a corresponding amplification of disturbing signals from strays or "static."

From the standpoint of sensitiveness of detectors, we have reached our practical limit. Extremely faint signals can be amplified a thousand fold, by several stages of audions or similar devices connected in well-known arrangements, but this method of amplification builds up all the disturbing sounds as much as the ones from the desired station. Such amplification is of little commercial value as generally it is more difficult to read the desired signals after such amplification than before. What is most desired is sensitiveness combined with discrimination and this is supplied more perfectly by the heterodyne than any other known radio receiver.

Receiver Assembly. All types of receivers, of course, employ inductances, oscillation transformers, and condensers and these are arranged in almost innumerable combinations, all designed to supply the received energy to the best advantage of the particular type of detector employed. These several elements are designed so as to absorb the minimum amount of energy, as their function is to conserve and select and to pass on to the detector as large a proportion of the energy received as possible.

Efficiency of Signals. While the energy profitably utilized by a radio receiving station at considerable distance from the transmitting station is but an extremely small proportion of that expended in making the signals, yet, compared to signals made by lights the efficiency is far better. That is to say if given a certain amount of energy to expend in making a noise, or a light, or a radio disturbance, the effects of the latter would be manifest at a much greater distance than either of the other two. This fact opens an interesting field for speculation regarding the possibility of interplanetary signals, but that is beyond the scope of this paper.

APPLICATION IN THE PRESENT WAR

Radiotelegraphy has been of incalculable value in this great world war. Every branch of the service has made some use of it.

Ship Use. This means of communication had proven its worth to the navies of the world before the war, and so most of the naval vessels in service were equipped with efficient apparatus. No less a naval authority than Captain Mahan is quoted as having said that the fighting efficiency of a battleship has been increased at least three fold by the employment of radiotelegraphy. It is now possible for our government to reach any of our ships at any time or place and give them orders or valuable information regarding the enemy, the weather or what not. A captain of a ship, or admiral of a fleet is no longer the Czar of his command as was the case when Dewey, in order that he could be free from interference, cut the cables, before starting for Manila.

The battleships of the first class are carrying radio transmitters of at least five kw. capacity with duplicate parts of every important element. They are also provided with several sets of smaller power which can be used either for landing parties, small boat work or emergency use of almost any kind. Every cruiser, collier, torpedo boat destroyer, torpedo boat and submarine torpedo boat is provided with its own particular type of equipment which differs from that of the battleship principally in its power rating. The maximum size of antenna that can be carried effectively by a ship determines the maximum power that can be radiated, and hence the limiting size of the radiation producing apparatus. The sizes employed range from five kw. for the largest battleship to one-half kw. for the smallest boats, and to one-fourth kw. for landing parties. Some ships have attempted to carry 10 kw. and a few 25 kw. but it has been found impracticable to carry an aerial that will make such a size of set desirable. Most of our navy's ship sets are 500-cycle, quenched spark gap type, although some are equipped with arc transmitters sending out sustained waves. Most of these sets are provided with means for rapid change of wave length so as to prevent an enemy from readily copying their messages or from interfering with its successful transmission.

Radio methods enable the direction and a fair estimate of the distance of certain ships to be determined. All of these possibilities have brought about the practice of using the radio transmitters for as brief a period as possible, and of employing codes of the briefest possible character. Merchant vessels, under war conditions, are not permitted to use their transmitters except to call for help. However, they keep a constant watch at the receivers for any information that may be picked up. Some of the large shore stations send out time signals and storm warnings for the assistance of the navigators of all ships.

Shore Stations. A chain of shore stations is now operated by our Government for communication with ships and no other shore station is allowed to operate for any purpose excepting for experimental work, and then it must be operated in a very restricted manner according to rules prescribed by the Navy Department and under supervision of an officer, unless inland a

sufficient distance to render its transmissions too feeble to be read by a submarine off our coast.

Our Government has a chain of high-power stations which act as trunk lines over which messages are sent for delivery to some ship within range of one of the large stations. These large stations are located at Arlington, Virginia, near Washington; at Darien, in the Panama Canal Zone; at San Diego, California; at Pearl Harbor, Hawaii, and at Cavite, Philippine Islands. There are some smaller ones at San Juan, Porto Rico; Key West, Florida; and Colon, Panama Canal Zone. Arlington can reach battleships at all points in the North Atlantic, although the ships cannot reply at distances much greater than 1000 miles daylight sending, but by relaying from other stations can keep in touch with Arlington. Practically all of the equipment of the high-powered stations was designed and built in the United States.

A striking proof of German preparation for a world struggle and of American failure to recognize such a condition, if further proof be needed, is supplied by the erection of the two large radio stations at Sayville, Long Island and Tuckerton, N. J. These two stations were completed and ready for service just as war broke out and were prepared to notify German ships when and where to go. They afforded a ready means of keeping in close touch with their propagandists operating all over this country. Censors were placed at these stations to insure neutrality prior to our entering the war but the reasons were not clear at the time as to why this practice was followed. There were no cable censors then and the radio art felt that it was being discriminated against in favor of the cables. Disclosures that have been made recently by Secretary of State Lansing and Ambassador Gerard give us the best answer as to why this was done as it must have been evident to our Government officials that we could not remain neutral, and such discrimination as resulted from radio censorship was doubtless due to special knowledge of the belligerents and of our inevitable later relations with them.

Army Use. While the Signal Corps of the Army had done some work in radiotelegraphy previous to the breaking out of war, its equipment was very small and incomplete. A few sta-

tions in Alaska and a few small stations at the army posts, together with a few pack sets constituted the Army's equipment. This condition has seriously hampered the Army in its preparation for war on a large scale, as its needs were not so thoroughly determined as were those of the Navy. The Army uses two general classes of portable sets for ground work one carried on mule back and the other on trucks. The mule back or "pack" set is a very small affair of only about 250 watts capacity, but it has a range of about 25 miles on the average and this coupled with its extremely portable character and the fact that it can be set up by two or three men in a few minutes makes it very valuable in scouting service. The power for operating the generator is supplied by two or more men, who crank the small dynamo by means of a special gear. The truck set is mounted on a motor truck and the truck motor supplies the power for driving the radio dynamo. The aerial is supported by a telescopic arrangement which can be quickly raised and lowered and the set put in commission. It is limited in its portability by the ability of the trucks to reach the locations desired when away from traveled roads. Both the pack and truck sets are in most instances 500-cycle quenched gap sets.

Aeroplane Use. The Army's big use of radio equipment is expected to be in the aeroplane fleets. All aeroplanes carry radio transmitters and some of them are provided with receivers also. All the new aviators are trained in the Continental Code until they attain a proficiency in sending of about eight or ten words per minute. This training is not very arduous as it is the receiving that is difficult and takes a longer time to master.

The aeroplane in modern warfare is expected to do most of the scouting and when supplied with radio equipment it can keep its ground station, and hence the Commander, advised of all that can be seen as it proceeds, without waiting to return and report. Another very important field of service for the aeroplane is the directing of the fire control. This is done by means of radio equipment and a battery can soon get the range of the enemy when directed by the observer in the aeroplane. The aeroplane equipments vary in power from one-half kw. down to 15 or 20 watts. The dynamos on most of the planes are driven by a small

two-bladed windmill, the motion of the plane supplying the wind. These windmills are capable of operating at any speed the plane may attain without danger of injury to the mill or dynamo. The aerial used with the higher powers consists of a trailing wire while the engine and metal parts about the plane act as the "ground." The one-half kw., 500-cycle quenched gap sets have a range of about 125 to 150 miles to a ground station of moderate size. The ranges on the other sizes vary from the 150 miles down to only two or three miles.

The radiation from aeroplanes must be a pure Hertzian radiation, in which the ground plays a secondary part if it plays any part at all. This is a rather startling fact for the older workers in this art, as the earlier experiences indicated that the ground connection was extremely important, and that it, in fact, made a commercial success of an apparatus that previously had been only of scientific interest.

It is with regret that I must refrain from a more detailed account of war applications, but I fear a disclosure of more than I have given is inadvisable at this time. What I have given may be new to some of you, but is well known by all of those well up in this art and so cannot possibly be harmful to this country's interest even if it should be handed to the enemy. We should be thankful, however, that this art was not discovered and developed in Germany as it might, under this latter condition, have been held as a war secret and used to wonderful advantage by the Germans now.

Use by Spies. There can be no doubt but that a great amount of use has been made of radio by the German spies. They have not confined their efforts to that alone, however, as telegraph, cable and mail have all come in for their share, and so the radio should not be looked upon as a dangerous device with which the public should not be trusted. A general law prohibiting the use of radio by anyone outside of the Government service would not overcome this danger, any more than a law prohibiting the general use of bombs would stop the anarchist from indulging in his favorite pastime.

AFTER THE WAR

The development of radiotelegraphy as a result of the war, with so many working to overcome its present defects, will make it ready to undertake the big peaceful applications to far better advantage than before. Among these many applications are:

1. *Trunk Line Overland.* The connection of the large cities of the country in an overland trunk line system. Such a service is entirely feasible. Transmitting stations with "diplex" high-speed sending and with companion "diplex" receiving stations at each location, would give a four-channel system well able to handle a large volume of business at rates that would make the wire lines exceedingly uncomfortable.

2. *Private Uses.* The connection of many large business houses with their branches was well under way and in some instances in service when the war stopped further use. A large extension of this should be expected.

3. *Railroad Service.* The general use for railroad service, not only as a reserve for present wire lines, but as a means of keeping in constant communication with the trainmen in charge of the operation of the trains. The increased safety of train operation in fogs will be another important result.

4. *Cable Competition.* The value of radiotelegraphy for service at present performed by cables is just beginning to be realized. Who can doubt but that at the end of the war every country will erect high-powered radio stations from which it can communicate with many other countries without the fear of interruption to such communication. Quite aside from this military advantage the low cost of erection and upkeep will cause a very general adoption of this system. Two large radiotelegraph stations, can be erected for approximately one-tenth the cost of an equivalent cable system. The cost of operation will not be materially different, as the power cost is about as much greater than that of the cable as the cost of upkeep of the cable is greater than that of the radio system.

The accuracy of radio transmission is considerably greater than that of the cable system. The lower first cost of the radio

telegraph over the cable enables it to be operated at a much lower rate than the cable. It can in fact be operated at rates so low and with a load factor so poor that no cable company can survive such competition for any great length of time. Transatlantic stations operated at capacity and at two-thirds of the present cable rates will more than pay their first cost in six months operation. These figures will give some conception of the possibilities of this means of communication. In making the calculations upon which this statement is based actual figures of what has been done between the United States and Germany were used. A capacity of 25 000 words per day was frequently secured in the Sayville-Nauen transmission prior to our entry into the war. This is a speed of only 17 words per minute and no difficulty should be encountered in maintaining such speed. There are several methods at present offering considerable promise of success, which will enable a speed of ten times that mentioned above to be secured and operated commercially. Think of the earning capacity of such stations operating at high speed and it does not take much of a prophet to forecast the future means of over seas communication.

Government Ownership. The most serious calamity that could befall radiotelegraphy would be Government ownership, and this unfortunately is by no means improbable. The military authorities are now very much enamored of radiotelegraphy and their experience in this war with it under their absolute control will not tend to lessen their desire to control it. It is a wonderful appliance for war, but it is no less so for peaceful pursuits and it should be allowed to work to its best advantage under both conditions. It will develop under present war conditions for war purposes particularly, but much of this can be turned to good account for service in times of peace provided it is not hampered by Government ownership.

This plea is made now for a square deal and you are urged to weigh well the arguments that will be advanced in support of the Government ownership party when the time comes for the consideration of its proposals. An attempt to secure Government ownership is feared because ample proof of such intentions has already been supplied. Several naval officers have openly boasted

to me that they would get control and since that boast I have taken part in fighting two bills that were introduced before Congress. Thus far those responsible for developing radiotelegraphy have been able to convince Congress of the inadvisability of the plan but each of these defeats has been followed by many inspired newspaper accounts of improper use of radio and the inference that such improper use was due to lack of Government ownership.

We are on the threshold of great things for radiotelegraphy and the things that are marvelous to-day will be commonplace to-morrow provided always that it is not stopped in its development by this threatened condition of Government ownership.

The following questions were asked and answered by Mr. Kintner:

Q. Has this same scheme been applied to directing submarine boats in the Atlantic and has it worked out where there was nobody on board the boat?

A. Mr. John Hays Hammond, Jr., is the best known inventor in connection with such operation. He has a scheme of that kind, but the objections are that to pick up the radiations necessitates an aerial which shows above the surface of the water, and the ships attacked can shoot it before it gets to them. The only solution offered is to send a number of them at once, and as the ship attacked cannot shoot all of them, one of them may be successful. That such a torpedo must have the exposed aerial which can be seen by the boat that is attacked, and also by the people who are guiding it is a serious objection. Such a device can be made to go on the water three or four miles under successful control.

Q. Are the radio towers insulated?

A. It was at first thought necessary to insulate them. In fact the Arlington towers were insulated. When tested it was found that they worked better without insulation, so the practice now is to use them without insulation.

Q. How does the bulb set compare with the quenched gap set?

A. The bulb set as at present developed is limited in power. When a bulb set capable of greater power is produced it will

probably be greatly superior. The present bulb sets are extremely critical and require an expert operator to make them work successfully.

Q. Was not the wireless telephone work between Washington and Honolulu carried on with bulbs?

A. Yes, there were some 320 bulbs used in that particular test. I have been told that after working an hour a renewal of 20 per cent. of the bulbs was required.

Q. They cost $50 or $100 apiece, do they not?

A. Yes, they are quite expensive, but I don't know that they cost quite that much; but the necessity for renewal at any such rate makes them impracticable as yet. And those particular signals were made after a number of unsuccessful trials and when conditions were found to be just right so that atmospheric disturbances were at a minimum. The signals picked up at Honolulu were amplified a thousand times. It is a very favorable condition like the conditions that prevail in a large astronomical observatory when they use their highest power instruments about once a year. They have possibilities but the atmospheric conditions will not permit their frequent use.

Q. What is the difference between night and day transmission?

A. The difference between night and day varies with the wave length employed. For long waves there is very little difference; but for short waves there is a tremendous difference. Waves of 600 meters, for instance, working over 200 miles, will go through with a little difference in favor of the night signal, but those same waves would probably not be heard at 1000 miles in daylight, whereas at night they would be heard at a distance of 1500 or 2000 miles. In the winter time it is nothing unusual for the United States Navy in winter quarters on the east coast of Cuba to pick up press notices and baseball news sent from the New York Herald Station with a two kw. machine. They got those every night, 1500 miles away, without difficulty. A two kw. set is considered good for 500 miles in daylight. One cannot make a more definite statement as to the transmission difference between night and day on account of the great difference in wave lengths.

Q. What is the power used in the press station in Florida?

A. I am not familiar with it. The largest station is Key West, and it has been heard in Cairo, Egypt. That is the longest distance of which I know, and it was a freak message. That station, a 25 kw., is good for 1000 to 1200 miles in the day, but you will find that all kinds of freak messages are heard a very much greater distance, just as in Cairo.

Q. Is Professor Fessenden still living and working?

A. He is still living. He is not working on wireless at the present time. He is devoting his energies to submarine signaling, by sound waves under water, which has nothing at all to do with electric radiation. He is equipping a number of boats with these submarine signals by which they can hear approaching vessels and hear signals and all kinds of things like that. It is an extremely valuable adjunct to our naval service.

Q. Aerials used for the transmission of large power are generally at a considerable elevation. Is it possible by means of an aerial which might be quite low to receive messages very great distances? What is the lower limit of aerials?

A. The lower limit seems to be the ground. There are instances on record in which wires have been laid on the ground, the ground being a sandy soil and very dry. Long wires of comparatively small elevation are capable of detecting those waves without any considerable elevation. A good portion of the receiving at Sayville was done without elevation. The receiving aerial does not need to be at all high. There is no exact law for that yet. That is something that is being investigated. There are a number of people who advocate the low aerial for transmission as well as receiving, but all attempts to transmit from low aerials have so far been unsuccessful.

Q. Has there been any success in imparting a directional effect?

A. There are certain claims made by Marconi that with a long aerial there is a directional effect. It has never been very definitely proved that such is the case. During a test made at one time by a United States vessel at sea we had the ship gradually turn around and we listened closely, but were unable to detect any difference regardless of what the angle was at any

time. It may have been that we did not have a sufficiently long aerial as compared with its height. That was the answer given by the Marconi people. I do not know whether there is very much directional effect over a great distance; there probably is when you are near by.

Q. I have been able to hear the Marconi Cape Cod station in Pittsburgh, but not up in New York State.

A. I do not think your two observations should be considered as at all conclusive proof. Conditions vary so enormously from day to day, that unless you could have simultaneous observations by independent observers I do not think you could make much out of it. The Marconi stations at New Brunswick and at Chatham, Massachusetts, are supposed to have directional aerials. At those stations they were experimenting with it two or three years prior to the war.

Q. I have heard that Professor Berg of Union College is using a coil of wire instead of an aerial for reception. Have you any idea what that is?

A. I got some intimation of this particular research you have mentioned and communicated with Professor Berg and he replied that he was hardly ready to state anything. It is too soon to say much about it.

Q. Has any commercial method grown out of Professor Pupin's static-preventing aerial?

A. Professor Pupin has kept that strictly to himself. He has talked about such inventions on several different occasions and has come out two or three times with different inventions for this. Some people claim that he now has a remarkable device but it is not being used to my knowledge.

Q. Has anything come of Mr. Tesla's wireless transmission of power?

A. Nothing has come directly from what Mr. Tesla has done, although he did a great deal of work which assisted other investigators. He has done a wonderful work and is very ingenious and a number of his devices have proved of very great value.

INDUSTRIAL HOUSING

By H. Walter Forster*

There exists a nation-wide shortage of housing in our industrial centers. The situation is critical. Many of our communities are already suffering seriously from lack of adequate housing for their workmen. The situation is growing worse; houses cannot be conjured out of the earth, as they require considerable time to build in large numbers. Vigorous attack upon this problem has been made in many cities and must be made generally throughout the country.

PRESENT SHORTAGE IN HOUSING

The reasons for the present shortage are primarily:

1. Under ordinary business conditions there is no appreciable excess of adequate housing in our large cities.
2. Normal building activities, during the past two years in particular, have been materially retarded, because of the high cost of material and labor.
3. The great rush of workmen to our industrial centers has seriously accentuated what would even under ordinary conditions be an acute situation.

Employers individually or collectively are behind a considerable number of housing projects now under way, and the investigation of the situation by the United States Government, with particular regard to the prompt delivery of large munition orders, has indicated the necessity of remedying the conditions in a number of districts if production under Government contracts is not seriously to suffer. It is interesting to note that the concentration of Great Britain upon war operations has caused so serious a shortage in industrial housing that it has been recommended that $5 000 000 000 be appropriated by the Government for the purpose of building one million homes after the close of the war, partly to make up this housing shortage and partly to furnish employment for a considerable proportion of the soldiers who will return from the front.

*General Manager, Independence Bureau, Philadelphia, Pa.

WHY ADEQUATE HOUSING IS ESSENTIAL

Gradually it has been borne in upon us that, as it is impossible to get pure water from an impure source or good crops from poor seed, so it is impossible to get stable, efficient, and satisfied labor from congested and insanitary homes. Most progressive employers have realized this for a considerable length of time, but it has never been brought home so forcibly as under present conditions when they are trying to bring to their plants the best types of men. Bad news spreads rapidly, and American labor, including our foreigners, is well advised as to the general housing inadequacy of our industrial centers. Many good men refuse to go to such points to apply for work, and those who come are very likely to find conditions unsatisfactory, and stay but a short time, and then move on.

The most obvious objection to crowded housing is the deleterious effect upon health. The records are clear upon this point; the greater the crowding the greater the percentage of tuberculosis. Good morals among the people are a national, municipal, and industrial asset. Morals are seriously affected by crowding of individual families, more seriously by crowding together of several families, and most seriously by addition of boarders under congested conditions. The general experience has been that unhygienic living and a lower standard of morals, coupled with uncomfortable, inconvenient, and unesthetic living conditions, have a very decided effect upon the efficiency of the worker. In order to obtain efficiency with the workmen we now have, and to take care of additional ones, we must have adequate industrial housing.

TYPE OF HOUSING NEEDED

In practically every community we are confronted by the need of housing both for American and for foreign workmen. It is difficult to ascertain the total housing need of a community, and even more difficult to determine what proportion of the total need is for Americans and what for foreigners. Generally speaking, most of the recent industrial housing developments have been designed primarily to take care of Americans of the higher type, probably on the assumption that as these families vacated

houses from time to time, the less desirable quarters would automatically become available to those further down in the social or financial scale. It is, however, considered very desirable to provide new houses of adequate types for foreign workmen in those communities where many are found, and that means practically every community from the central portions of the country to the Atlantic seaboard.

It is obvious that it is necessary to provide housing to take care of the following situations:

1. Families living by themselves.
2. Families who take boarders.
3. Boarding houses.

Size of Houses. A recent compilation of data on 17 643 houses, covering some 200 industrial housing projects, made by the United States Government, developed the following information on the size of houses:

1. One-third were four-room size.
2. One-sixth were five-room size.
3. One-sixth were six-room size.

The average family generally consists of father, mother, and three children, and to house such a family properly there should be available the following rooms:

1. Three bedrooms, one for the parents, one for the male children, and one for the female children.
2. A combined kitchen, dining room and living room, or two rooms, one for kitchen and dining room purposes and the other for living purposes.

In other words, four and five-room houses are theoretically correct, especially for foreign families, and experience will bear out the fact that these are the most popular sizes. For larger families, and particularly for those who desire to keep a few boarders, the six-room houses have proved popular among foreigners. The average American family unquestionably prefers about a six-room house if it can afford it.

Design. The United States Government report, referred to above, which was presented by Mr. Magnussen at the National Housing Association conference in Chicago, October, 1917, stated

that the information regarding 53 176 houses indicated the following arrangement:

1. 48 per cent. single houses.
2. 35 per cent. double houses.
3. 11 per cent. row houses.
4. 6 per cent. no information.

There is little doubt that the single house is the ideal house, and that this is the best house to build where it is expected to sell. It is not difficult to sell half houses where they are built in pairs, but it is difficult, except in one or two of our American cities, to sell row houses individually. Experience seems to indicate that row houses should be intended for renting purposes, as they do not sell readily, and lower building costs and less ground occupied make lower rents possible.

It is necessary to call attention to the fact that the smaller the house the better should be the design. Where one general room is used for several purposes and bedrooms are small, the importance of anticipating the actual need of the occupants is particularly great. It is pleasing to note that a number of architects have realized this, and have developed very excellent plans for relatively small low-cost houses.

Equipment. Company after company that has put up housing for its employees has been pained to discover that the cost of this housing was running far higher than anticipated, and that because of this fact it would not be possible to earn a satisfactory return upon the money if rent were to be on a scale which their workmen could afford. Analyzing each situation has generally developed the fact that the employer has tried to give too much to his people. The engineer who built an industrial plant 50 per cent. larger than necessary and who added a considerable number of frills would be no more at fault than the man who built unnecessarily large and elaborately appointed houses for working people. To be successful, industrial housing must be upon the same economic basis as any other form of industrial operation.

Looking after this question a little more closely we find, for example, such instances as the following:

1. Building generally six-room houses where four and five-room houses would answer very well.
2. Putting a large amount of money into excellent roads and cement sidewalks, when it would be entirely feasible to keep such improvements for some future time. A very large percentage of our Americans of the better class are to-day living on unpaved streets, and are making use of cinder or plank walks.
3. Furnace or other central heat is particularly expensive under present conditions, and in many houses superfluous. Most families who come from less pretentious homes own a supply of stoves and are accustomed to using them. In fact most of the smaller homes rely upon the kitchen stove to heat the combined kitchen, dining and living room, and to provide a little heat for the remainder of the house.
4. Running water is absolutely essential, because of its great convenience and because of the menace which always exists with wells. A sewer system, on the other hand, is not nearly so important, and the cost of many industrial housing projects has risen materially through the necessity of installing a very elaborate sewer system in order to provide for the most modern of plumbing. Where developments are in outlying sections, it is entirely feasible to delay the installation of sewers for some future time. With running water, a privy does not constitute as much of a menace as where wells are used. More pretentious houses or groups of houses can be provided with cesspools.
5. It is a hopeful sign that certain types of foreigners demand a bath-room in any house which they purchase or rent, but a great number of foreigners do not object if bath-room equipment is not provided. In workmen's houses, bath-rooms are occasionally added afterwards and are placed in basements when there is sufficient room. It is, of course, feasible to design a house in which it will later on be possible to place a bath-tub without material change or expense.
6. Electric light in most communities is considered almost a necessity, and forms a convenient, low-priced, and relatively safe form of lighting. The need of extending gas to workmen's houses in which the women are generally used to cooking on coal stoves, is as a rule not nearly so great.

Materials of Construction. Industrial housing is now being put up of all types of construction, including frame, stucco on wood, brick veneer, brick, tile, and reinforced concrete. The best material to select will, of course, vary with the locality and

will depend primarily upon cost, availability, speed of construction, and, what is very important and frequently overlooked, the effect upon depreciation and upkeep. The depreciation and upkeep on a concrete house which is rented will probably be in the vicinity of two and one-half per cent. per year, and it may be double this in a frame house.

COST OF INDUSTRIAL HOUSING

Rental Workmen Can Pay. The fundamental question, if industrial housing is to be upon a sane, businesslike basis, is how much rent workmen can afford to pay for their homes. There has been a tendency to make use of the general rule that 20 per cent. of wages could be paid for rent, and 25 per cent. where payments were on the home buying basis. While the 20 per cent. figure works out quite closely in many average cases, the problem is how much the man has left for his rent and other expenses after he has paid for the necessary food. Food comes first in the scale of human needs. Unfortunately, the man with many mouths to feed and consequent heavy food bills has more need of a larger and more costly house and less money to spare for the purpose.

Recent careful investigations and calculations of the minimum cost of food necessary to feed an average family properly is as follows:

1. Father, 150-pound laborer	3000 calories
2. Mother, 150-pound woman, working hard	3000 calories
3. Child, 12 to 15 years old	4500 calories
4. Child, about 8 years old	2500 calories
5. Child, about 3 years old	1300 calories
Total	14 300 calories

These figures are generous for growing children, but only moderately so for the parents. Assuming intelligent purchase of the food necessary to supply the above total number of calories, properly proportioned to take care of the needs of the body, the minimum cost of 1000 calories to-day will be about 11 cents, or about $1.57 per day, or something like $47 per month. It is true that many families are undernourished by reason of their

buying insufficient food, but it is also true that the average housewife does not buy with scientific intelligence, and consequently what is saved by undernourishment is probably spent through unwise purchasing. The problem then is to subtract from the man's income the necessary food expenditures, and then take a percentage of the balance as being available for rent. This percentage has been placed at a maximum of 40, especially with low-wage workers. The man earning $90 per month, spending $47 for food, has $43 left for all other expenses. If he pays 40 per cent. of this for rent, he has approximately $17 as a maximum rent item. Many workmen, particularly skilled Americans, can and do pay considerably higher rents, but there are very large numbers whose rent paying capacity ranges from $10 to $15 per month.

Referring again to Mr. Magnussen's figures, we find that out of 17 643 houses, 69 per cent. of the four, five, and six-room size rented for not over eight dollars per month. Such a rental is not economically possible in our cities, where land and houses now cost so much, nor is it necessary with the relatively high wages which are now paid. It must not be forgotten that these figures apply to a large extent to mining and cotton-mill towns, where houses are often small, poorly built and poorly maintained, and where low house rent unfortunately is a factor in establishing wage scales. It is interesting to observe from Mr. Magnussen's address that 57 companies, having invested about $15 000 000 in houses, earned a gross of 8.3 per cent. average over a five-year period, that eight coal companies with $2 800 000 invested earned 11 per cent. average over a five-year period, and that one company's annual return was as high as 20 per cent. of its investment.

What Housing To-day May Cost. If houses are to be rented upon a 10 per cent. gross return basis, which is an average figure, the total cost of the house to the man who can pay $17 per month rent should not exceed $2000, and to the man whose rent is to be $10 per month not more than $1200.

Where houses are built of reinforced concrete, it probably is good business to rent them for nine per cent., or even eight per cent. of their value, because of relatively low depreciation

and upkeep. With frame houses, 10 per cent. is the absolute minimum that is advisable, made up as follows:

1.	Return on investment	5 per cent.
2.	Taxes	1 per cent.
3.	Depreciation (sinking fund)	2 per cent.
4.	Upkeep	2 per cent.

What Houses Actually Cost To-day. The range in house building costs is exceedingly great. In the South, where frame construction is common and no elaborate heating system is necessary, attractive cottages are being built for figures as low as $700 to $800. Well-appointed four-room houses for rental purposes can be built in the residence sections of most cities for figures not to exceed $2000. Splendidly designed six-room houses of attractive appearance, with all modern improvements, in large developments have been put up at costs of from $3000 to $4000.

Charity to be Avoided. The consensus of opinion of those who have studied the industrial housing problem is very decidedly against anything savoring of charity or paternalism. The essential arguments are:

1. Workmen resent anything of this type, being possessed of quite as much self respect as the average citizen of somewhat higher social standing. Workmen feel that they should pay their way and that they should receive adequate wages to enable them to do this.
2. Any business activity which is not a money making one is bound to prove unpopular in the long run, and industrial housing that is netting two per cent. or some such figure will certainly not be kept up in a manner which experience has shown to be absolutely essential to get the best results.
3. If an employer has not sufficient houses to take care of all of his people, there is bound to be discrimination.
4. The building, in a large community, of some houses which are not rented on a businesslike basis is bound to upset real estate values generally.

Housing projects where houses are rented or sold should be upon a basis calculated to return at least five per cent. and preferably six per cent. The advantages of better labor conditions will generally make the housing investment an attractive one.

SELLING AND RENT

It is generally believed that houses should be sold in so far as it is practicable to do so. A man who buys a house is a better citizen, is less likely to take part in labor disturbances, and is almost bound to remain in the community. The monthly payment method of selling houses to both American and foreign workmen is practically standard. An initial payment, preferably 10 per cent., closes the deal, and monthly payments upon a slightly higher basis than the rent take care of the principal and interest in a period of ten to twenty years. It is necessary, however, in every industrial community to have a considerable percentage of houses for rental purposes, as many employees who cannot and will not buy must be cared for. On the other hand, if a large proportion of new housing is sold, those who purchase homes will leave old quarters to those who want to rent.

It is particularly important to note that foreigners, on the whole, have stronger home-buying tendencies than Americans, and that those who deal with foreign workmen find them prompt in meeting their obligations.

AGENCIES FOR SECURING ADDITIONAL HOUSING

Experience during the last two years has made clear the fact that employers cannot look to individuals or real estate operators to provide the necessary housing for their employers. The ordinary workman generally does not build his own house. He is more interested in buying than in building. He is not certain of the permanence of his job and of his desire to settle in the place where he is now working.

The real estate operators are uncertain as to how long rush business will continue, have no enthusiasm for putting their money into industrial housing, nor the necessary funds to handle big projects. This, then, has made it necessary for employers, either individually or collectively, to provide at least a portion of the housing needed in their communities. A considerable number of such projects are now actively under way and these, on the whole, have been inaugurated along well conceived lines.

The United States Government is considering putting a very considerable sum of money, $50 000 000 having been mentioned, into industrial housing, either by providing housing directly or by loaning money at low rates of interest to employers who will build the houses.

HOW EMPLOYERS HANDLE HOUSING

A scheme of procedure for action by individual employers or by groups of employers has now been established along the following lines: A separate company is formed and a competent management put in charge of its operation. This tends to separate, in the minds of employees at least, the employer from the housing operation, and it relieves the manufacturing men from the responsibility of handling housing as a side line. Careful analysis of conditions is made and the probable needs of the community for a period of years ascertained. A careful plan is developed with an estimate of the amount of money needed for the initial development.

Financing by banks for first mortgages on real estate and houses is, of course, easy to secure. At least 50 per cent. can be carried in this way. The housing company has to provide the additional capital, and, where property is sold, carry the second mortgage. Construction is put through in a systematic, well-thought-out manner, and on a scale large enough to take advantage of wholesale methods, and particularly on a long-time basis so that working forces become highly efficient.

CONCLUSION

The essential facts regarding the industrial housing situation in this country may be stated as follows:

1. There is unquestioned need of additional housing in practically all our industrial centers.
2. Relief can be looked for only from the employers, and in some cases, in part, from the Government.
3. There is no fundamental reason why an employer should hesitate to build houses for his workmen any more than to provide buildings for his machinery and goods.

4. Good houses will rent and sell even in times of business depression, because they will be superior to the average house in the community.

5. The money return on such an investment can be made equal to that secured from the first-mortgage bonds of a subsidiary.

6. Money can gradually be withdrawn from the project.

7. Adequate housing will have a definite effect upon securing labor, reducing labor turnover, raising the efficiency of labor, and promoting the welfare of the community as a whole.

DISCUSSION

Mr. Fred Hubbard:* As has been stated in the paper just presented, large employers of labor have been forced into serious consideration of the housing problem. In the Youngstown District The Carnegie Steel Company started in the spring of 1916 on the construction of the McDonald bar mills. These mills are located about eight miles out of Youngstown, about half way between Niles and Girard. The nearest town of any kind is two and one-half miles distant. After starting construction we were at once confronted with the problem of transportation and of getting men who would take up the construction work at the mills. This situation has been taken care of by running a work train on the Youngstown & Northern taking the men back and forth from Youngstown. This was rather unsatisfactory, especially for a permanent proposition. After starting this project the company conceived the idea of purchasing property near the mill and going into the project of industrial housing. About 550 acres of land located on a hill opposite our plant were purchased. First an accurate survey was made, establishing contours, and a contour map was prepared, from which were figured all the preliminary estimates and lay-outs. Several different plans of the town were drawn and these were carefully considered and finally a certain plan was adopted. As a whole the street lay-out has 60-foot avenues and 50-foot streets. There is, however, one exception to this which is the main street of the town on which

*Construction Engineer, Youngstown District, Carnegie Steel Company.

is located the street car line. The street car company had a 50-foot right of way before the purchase of this property and a 50-foot street was platted on either side of this right of way, which will make a street 150 feet in width and having a boulevard effect.

At McDonald the double sewer system is being used; that is, entirely separate sewers for the storm water and sanitary connections. This is one of the requirements of the State Board of Health. The storm water sewers run down the centers of the streets and the sanitary sewers are for the most part placed in the rear of the lots. The water lines also run down the rear of the lots, as is the case with the telephone lines and electric lines for house service. The business district street-lighting lines will probably be in conduits. Concrete pavements and cement sidewalks are planned over the entire part of the plat which is being improved at the present time.

The houses which were started early this summer are for the most part frame construction with some stucco over frame and quite a number of "Fisklock" brick and a few brick veneers. They are mostly four, five and six-room houses. It was found that if a house larger than four rooms was designed it would be possible to make a six-room plan out of it in which could be gotten very desirable features such as three bedrooms and dining room. The Carnegie Steel Company has perhaps gone further than the speaker of the evening recommends in sanitary installation. We have put in complete up-to-date improvements, including electric lights, bath-room equipment, cement cellars and concrete laundry trays, and the houses are complete in every detail and perfectly fit to be occupied by any American workman. In fact the houses under construction at the present time will be occupied mostly by American workmen and the better class of foreigners. In the construction work it was found that there are a great many things to consider, especially when building on a large scale, that are very different from the ordinary methods used in the construction of single houses. The so-called ready-cut system has been tried out, having our own mill in the field in which to cut the frames for the houses. It was found to be economical to cut the entire frame at the mill and send it up to the job with the pieces marked thus eliminating a great deal of

hand work in the field. But to carry this system further has not been found economical. Therefore, we have established what we call ready-cut frames in the building operation, and eight or ten houses all of the same design are used, all frames being cut at the mill. Differences in architectural features are used to relieve the monotony and by properly distributing houses of the same type a very satisfactory general appearance is obtained.

In painting and interior decoration of the houses creosote oil has been used very largely in the priming and staining coats. The exterior trim of the houses is mostly cypress and redwood; the interior trim, yellow pine and oak. All trim both interior and exterior, before leaving the lumber yard, is given a priming coat of a mixture of creosote oil to which has been added about two per cent. of linseed oil and a certain quantity of zinc and coloring pigments. The interior finish also receives one coat of shellac before it leaves the lumber yard. All interior woodwork is given one coat of creosote stain, two coats of shellac and one coat of wax. This, we believe, will make a very desirable finish as well as a very pleasing interior effect. We find that the waxed finish does not show up the scratches and marks usually received from hard usage as plainly as does a varnish finish. Plaster board called "Bestwall" is being used in all frame houses on which the decoration is done direct with flat wall paint, the walls being mottled and the ceiling a plain color.

Mr. L. P. Blum:* How many houses are there under construction?

Mr. Hubbard: Between 200 and 250.

Mr. L. P. Blum: What is the size of the lots?

Mr. Hubbard: These lots are for the most part 40 by 115 feet. The alley has been omitted in all but the business district. The business lots are 25 by 103 feet with a 24-foot alley. Some of the lots in the better residence district are 50 by 150 feet and a few facing the park are larger than that.

*Blum, Weldin & Co., Pittsburgh, Pa.

A MEMBER: What will they rent for?

MR. HUBBARD: The rental price has not been entirely decided upon but it will probably run from $20 to $30 per month.

A MEMBER: How are they heated?

MR. HUBBARD: Hot-air heating furnaces have been installed in the basements of all houses.

A MEMBER: Gas or coal?

MR. HUBBARD: Soft coal. We do not have gas, although we are trying to get it for next year if possible.

A MEMBER: What is the cost?

MR. HUBBARD: The project is not far enough along to give authentic figures but I would estimate that the houses will run complete from $3200 to $3600 or $3800, and some we propose to build later will run as high as $5000 to $6000.

MR. L. P. BLUM: Is that the house alone?

MR. HUBBARD: That is just the house and lot and does not include street improvements.

A MEMBER: Will you sell the houses?

MR. HUBBARD: Probably we will both sell and rent, although as yet no selling campaign has been made and probably none will be made until next summer.

A MEMBER: What are you making your pavements?

MR. HUBBARD: For the most part 23 feet in width. The sidewalks are mostly five feet and six feet.

Mr. Robert Linton:* The question of housing employees in western mining camps is very frequently the most perplexing one since there is more or less uncertainty as to the life of the mines and consequently the length of time that the housing accommodations will be needed. It is, of course, necessary that men and their families be provided with comfortable places in which to live but it is also necessary that this be done without any unnecessary expenditure of money. Furthermore, there is usually a much larger percentage of unmarried men for which to provide in a mining camp than in any other kind of industrial settlement. It was for a good many years the usual custom to house these men without families in large bunk houses which, while it served the purpose of providing accommodations at minimum cost, was, of course, attended with the disadvantage of having too many men herded together in one building.

The plan that has been followed at the Kimberly Mines of the Consolidated Copper Mines Company has proved a very satisfactory substitute for the old bunk house. Here the men are housed in one-room cabins, these cabins being small but comfortably furnished and each occupied by two men. The men board at a centrally-located boarding house. For staff employees, without families, a club house is provided where the staff members room and take their meals and where there is a large and cheery living room for their use. For married employees four-room bungalow cottages are provided and for certain married staff employees, of course, houses that are somewhat larger and better.

A few views of our camp arrangements, which are still incomplete, may be of interest:

No. 1 is a general view, showing one section of the two-man cabins in the immediate foreground, these being occupied by American labor. On the other side of the hill the buildings farthest away are cabins occupied by Italian labor and also a separate Italian boarding house. Immediately beyond the cabins occupied by the American labor is the staff house and across the road is the emergency hospital. A number of the four-room

*Consulting Mining Engineer, Pittsburgh, Pa.

cottages are also shown. No. 2 shows a closer view of the two-man cabins. No. 3 shows a row of the four-room cottages. No. 4 shows a near view of one of these cottages and No. 5 is a view of the emergency hospital.

These housing arrangements have proved satisfactory to the men and provide very comfortable quarters without involving excessive expense.

Mr. P. C. Kuegle:* The Buckeye Land Company, a subsidiary of The Youngstown Sheet & Tube Co., is engaged in two housing developments at the present time. One of these is a tract of 219 acres on the south side of the Mahoning River, and known as Loveland Farms. This property has been laid out by Mr. John Nolen, city planner and landscape gardener, of Cambridge, Mass. It will be divided into approximately 1000 lots, of very irregular shape and size on account of the winding streets to which the gently rolling surface naturally adapts itself.

Mr. Morris Knowles, of Pittsburgh, Pa., has been engaged to design and superintend the city utilities. The property being outside the limits of Youngstown, makes it necessary for the company to arrange for all domestic services. There are now 100 detached frame dwellings under construction, the first of which should be ready for occupancy early next spring. The houses average 26 feet square in size, are mostly full two-story, and will be equipped with bath-rooms and hot air furnaces. These properties will be sold to employees of the Youngstown Sheet & Tube Co. on easy terms, net yet determined.

On the north side of the river, and just outside the limits of the village of East Youngstown, on a tract of 40 acres, we have under construction a workingmen's colony of concrete houses for 146 families. They are being built by The Unit Construction Co., of St. Louis, and consist of attached or terrace houses with accommodations for from two to eight entirely separated families in each building. Houses are equipped with basements and bath-rooms, and are intended to rent to foreign families whose weekly income is from $20 upward. Houses will be three and four rooms each and will be ready next spring.

*Manager, Buckeye Land Company, Youngstown, O.

The ultimate number of families on this tract will be about 700. The rate of rent has not yet been determined.

MR. W. H. LAUMAN:* Mr. Hubbard has given you an idea of the construction of the Carnegie Steel Company houses at Youngstown. The plans used on the Wilson town site are the same plans as those at McDonald. The Steel Company has before it the problem of which Mr. Forster spoke, that of not having sufficient housing capacity for their workmen. The Clairton Steel Works does not have enough houses for its workmen at the present time, many of the men coming from McKeesport and Elizabeth, and as the men can get just as good jobs nearer home it is difficult to hold them.

About the first of the year or a little later we expect to employ about 1500 more men in the by-product coke plant, now under construction near Wilson station, and to take care of some of these men we are building houses on a tract of land containing about 90 acres in the immediate vicinity. The ground is very steep and very irregular so that we have been compelled to get away from the rectangular lay-out of streets and have followed contours to get usable grades. The plan shows nearly all of the streets as curves and hardly two lots of the same dimensions. This was a matter of necessity rather than a question of beauty. The Company is grading, curbing, paving and laying sidewalks on the plan, and having the water, gas and electric lines installed. All of the foundations are of concrete and the houses vary in construction, some being siding, "Fisklock," stucco, or shingle, all having, however, slate or asbestos roofs. We endeavored to get away from the regular row construction of the coal company type, and have used ten or twelve different designs, each design having three exterior treatments, and also getting a variety of colors. We are building about 235 houses at Wilson at present and will probably continue the work with more houses in the near future. The houses are of rather high grade for the ordinary workman, having baths, laundry trays, furnaces, cooking stoves, electric lights, etc., and will be rented at a reasonable rate. The employees can purchase their homes if they so desire. The houses

*Assistant Chief Civil Engineer, Carnegie Steel Company, Pittsburgh, Pa.

were designed with the idea of making it as hard as possible for more than one family to occupy one house, the entrances being constructed with that in view. The Company felt that the mixing up of families or taking of boarders should be discouraged, although in the early stages of the by-product work it will be necessary to use all houses to their capacity. Although our plan is in Wilson borough which does not have a sewage disposal plant, the State Board of Health requires all sewage from our houses to be treated, which necessitates our constructing a disposal plant, which is of the Cameron type and will be constructed on ground owned by the Company.

I would like to have Mr. Forster give his idea on the segregation of the foreign element and especially that of the negro.

Mr. George H. Schwan:* In Mr. Forster's discussion he went into the various problems of house construction, number of rooms, arrangement of house and cost of house and touched somewhat on the relation of the man to the employer, but as I remember it he said very little about the community idea for housing. I should like to bring forward a point or two which Mr. Forster did not amplify.

First, I want to speak of the house as part of the community rather than as an isolated thing. Housing employees means more than supplying mere shelter for a family. It includes the proper arrangement and grouping of houses, and this means not only the supplying of a pleasing and harmonious environment, but also the supplying of means for adequate development of the community and its social life. The design and arrangement of the house have a great influence on home life. A plan must be adapted to the sort of home that the people will develop. If the people are too much crowded together; if there is no opportunity for privacy; if the plan is not practical so that the people are prevented from arranging their household goods advantageously, or if the type of house is not properly adapted to the proper development of American family life, it will be seen at once that the home life will not be what it should be.

*Industrial City Planner.

If the neighborhood is properly developed as an attractive community, the people will be almost imperceptibly drawn together and a neighborhood spirit will be engendered that will make all the people satisfied and happy and the results will be seen not only in a better home life, but also in greater contentment in their employment. The design of the house, the grouping of houses, the harmony of design, the judicious use of color, the texture of materials and the adaptation of the plan and the grouping to the topography, are all important elements in the development of a neighborhood unit. The efficiency of a workman is greatly impaired if he is discontented and dissatisfied, as is well known. It has not been so generally recognized, however, that housing may play a great part in creating satisfaction and contentment; in furthering the development of home life; in aiding the development of a better social life; in promoting a neighborhood sentiment and loyalty; in developing a community civic spirit; and thus in promoting efficiency, loyalty, contentment with good working conditions, and in reducing the amount of restless shifting about which is so detrimental to employer and workman alike.

In developing a housing scheme, a great deal depends upon the lay-out—the type of streets and the direction, gradient, width, and development of the same; the districting of the whole plan so that property values shall be stabilized and so that the community shall have the advantage of a planned development instead of being a meaningless hodgepodge; the proper location and grouping of community buildings for the sake of the proper focalizing of the life and development of the community, its social spirit, and the resultant good effects on the homes and on the individuals composing them; the location of business buildings for the sake of accessibility, utility, and separation from the more strictly residental buildings; the laying out of small parks; the location of children's playgrounds, wherever they are needed; and also the proper planting of yards, hedges, street parking and the like. The homelike effect of judicious planting if properly planned means a great deal in the satisfaction and contentment which the people will feel in their homes and in the work which enables them to occupy such homes and to live in such a desirable community.

We must, above all, avoid the depressing influence of drab, disagreeable colors. Most people respond to color, and many of our foreigners are very sensitive to the vitalizing effect of bright colors. It is quite possible to choose bright colors and yet avoid the color atrocities that the mention of color usually calls to mind. Moreover, the proper grouping of colors, to produce a harmonious effect, needs to be studied. We ought to consider very carefully the effect on the work and life of the people, of the brightening of their lives which a judicious use of bright, but not glaring colors would produce. This applies to interior decoration, to sunlight in the rooms, to color and texture of materials used in exterior construction, to planting, to grouping, and to all that tends to diversify and individualize the homes while still grouping and harmonizing them. Certain developments in European cities show us the remarkable results that can be achieved by a judicious use of color; and the Pan-American Exposition at Buffalo, and to a most wonderful degree the Panama-Pacific Exposition at San Francisco have shown us in a most marvelous way what color means to all of us, and what exquisite results can be achieved when colors are harmonized by a master hand. Let us not be discouraged in the use of color because of the garishness we sometimes note; but let us develop the use of color so that our cities shall have a pleasing, harmonious appearance, but at the same time be bright and cheering.

Some good examples of modern housing developments in which the above principles are carried out are:

The development of the Goodyear Tire & Rubber Company at Akron, now nearing completion and consisting of 1000 houses with parks, athletic field, playgrounds and a community center.

The Forest Hills Development completed some years ago and so well known as to need no description here.

The development of the Jones & Laughlin Steel Company at Woodlawn, Pa., where the grouping and design of certain portions is interesting and shows the result of careful study of industrial housing work.

Attention might also be called to the development of the Pennsylvania Rubber Company at Jeannette, Pa., which is being worked out in a comprehensive and careful way along the lines

mentioned above; to the Hopedale, Mass., development for workingmen, and to an excellent development for the Ohio Steel Foundry Company at Bucyrus, Ohio.

MR. L. BRANDT:* I was much interested in all that Mr. Forster had to say on the subject "Industrial Housing," which he covered very thoroughly, especially the necessity of manufacturerers taking up the proposition of housing their own employees. To do this well I believe it is of importance to any manufacturer to use care in planning and building the correct type of house that will fit the income and class of workmen that he employs. The past few years of the industrial development of America have shown remarkable skill and thought as applied to mechanical and plant engineering. Future conditions will necessitate the same skill and thought on the part of the employer applied to the problem of human engineering.

The information that I have at hand shows that Mr. Forster states correctly that the average family consists of five persons. I have found of the five there is on the average one workman, the housewife and three children. I have further found that the four members of the household other than the workman must be made happy and contented in order to have a satisfied and efficient employee in that home. This can be accomplished only by providing homes that are attractive and comfortable and supplied with good environments, and which may be purchased or rented without imposing a burden upon the occupants, whose incomes should be sufficient to provide them with entertainment and a few luxuries.

The type of house to be built and its essentials are determined by its location and the workman who will occupy it. I personally believe the first essential is sanitation. The disposal of sewage or waste matter must always have the greatest consideration. The protection of water supply is absolutely necessary. Water from open springs or pumped from unprotected streams is too dangerous to use, therefore where small groups of houses are to be built in districts where unprotected supplies of water are to be had, we find the best solution is to use deep drilled

*Industrial Housing Engineer, Pittsburgh, Pa.

wells, properly cased, to protect them from surface drainage. Outhouses should be built with tight vaults or receptacles that will properly treat the waste matter. Cellars under houses should not be used except where drainage can be had. I always recommend that sanitary closets in connection with sewage disposal should be used where running water is available.

The materials to be used in construction of houses should be determined on the basis of cost, maintenance, the length of time in which they must be built, and the length of time for which houses are to be used. Houses for certain purposes can be so standardized and designed for wood construction that they can be erected so complete in a factory that when delivered at the building site they can be erected for use in less than a week's time.

Methods for building concrete houses have been made commercially successful and can be used to good advantage in properly designed houses that lend themselves to concrete construction. Clay products have been developed in various units and can be used in building well and properly designed houses at reasonable costs.

In closing I wish to say that much good has been done by our housing associations in bringing to the attention of manufacturers the fact that by providing good housing for their employees there is less shifting of men, their efficiency is improved and a better product is the result.

Mr. R. L. Wilson:* Most of the comments and suggestions so far have been to meet the conditions of a new plant. A good many manufacturers have a well-established plant and business, and due to present conditions they have trouble getting enough men. The conditions around Pittsburgh are very difficult. We had a housing plan we expected to develop this year but were unable to do so. We have a tract of land upon which it was planned to build and that plan or property is such that I think it will be artistic at least on account of the contour of the land. It certainly will not be square. We took contours and made a cast of the property and it looked to me a good deal like

*Assistant General Superintendent, Westinghouse Electric & Manufacturing Company, East Pittsburgh, Pa.

the foot hills of the Rocky Mountains. However, the tract is the best we could secure.

The problem we are facing is to find a plan that will give us some immediate relief. That means providing for bachelor empolyees, who are to some extent floaters. I would like to ask Mr. Forster what the general experience has been, as to the best plan for housing unmarried men, whether it is better to house them in a rather large bunk house or whether they should be housed in rather small units. We have tried both. We built a dormitory for bachelors and limited it to the foreigners. It accommodates about 130 men, four men in a room, with all conveniences in the building. We also found it necessary to employ a good many colored men and we decided that the best plan was to house them in units. We built a number of units which accommodate twelve men each. These buildings were put up in fairly good shape. The back half of each unit constitutes the sleeping quarters and the front half is fitted up with lockers, table, chairs, stove, etc., where men are supposed to spend their evenings. We have also tried bunk houses for the colored men. It seems to me that the unit system is better. I do not know whether it is the best for white men or not. I would like to hear from Mr. Forster as to what the experience of others has been along this line.

Another point is whether in handling colored men, whom we shall have to use more and more, it is advisable in a building scheme to include a district where dwelling houses for colored families will be built or whether such scheme is objectionable.

Mr. John M. Rice:* All the other gentlemen who have discussed this paper have been interested in a single industrial concern. But Mr. Forster has also touched upon the group action in places where more manufacturers than one are interested in the housing situation. I think that is the condition we have here in Pittsburgh, and therefore the experience of other cities where co-operative action has been secured should be of interest to us.

I know of one development in Williamsport which is typical. That city has a population of about 45 000, and an active Board

*Civil Engineer, with Morris Knowles, Consulting Engineer, Pittsburgh, Pa.

of Trade which has succeeded in inducing a number of small industries to locate in that city. One of these, however, is a subsidiary of one of the large rubber companies, and within the last year and a half, on account of labor shortage, they theatened to dismantle their Williamsport plant. As this would have been a great calamity for the town, the Board of Trade, after considerable preliminary effort, started a campaign and interested enough people of all classes in the city to form a stock company having a capital of $500 000. They began construction and have about completed 300 houses, which they will sell for approximately $3000 each. These are fire-proof terra-cotta buildings, with all improvements, concrete sidewalks and cinder streets. The city is taking care of the storm water drainage, but the building company is installing the sanitary sewers. I believe that this is a good example of what a community can do when it is called upon to take care of such conditions.

Mr. K. H. Talbot:* The economic side of housing has been so thoroughly covered by the speaker and others who have discussed the matter that there seems to be little left to say concerning it. However, I do feel that some mention should be made of some of the individual operations in which concrete construction has been used.

One of the latest is the operation at Donora, Pa., where 80 concrete houses, sheltering 100 families, have been completed for the American Steel & Wire Company by the Lambie House Corporation and the Aberthaw Construction Company. In all there are 20 double and 60 single houses. Monolithic concrete construction properly reinforced was chosen on account of its superior building and fire-proof qualities. The only exposed framework on the exterior is the window frames, so there is practically no danger of fire spreading from one house to another. Such construction reduces depreciation and maintenance. By the use of steel forms the houses were cast one story at a time. The basement walls are solid concrete nine inches in thickness and not reinforced. The first and second-story walls are of solid concrete six inches thick and properly reinforced. The concrete is pro-

*Division Engineer, Promotion Bureau, Universal Portland Cement Company, Pittsburgh, Pa.

portioned approximately 1 : 2 : 4 for first and second-story walls and floors, and 1 : 3 : 5 below the water table. The floors and the ceiling for the second floor are reinforced concrete of the beam type tied into the side walls. Each story thus resembles a concrete box. The floors are surfaced with wood flooring nailed to wooden sleepers embedded in the concrete when cast. These houses have been built complete in every respect, including furnaces, electric lights, bath-room, range cupboard, window-shades, screens, etc. Additional outside improvements will be made, such as concrete alley ways, yard walks, steps, trees and shrubbery.

The Delaware, Lackawanna & Western Railroad some years ago built 20 structures of reinforced concrete at Nanticoke, Pa. Each building consists of two dwellings of seven rooms each. These buildings are of reinforced concrete throughout, including walls, floors, partitions, roofs and stairways. Forms were made of steel plate of standard units. The partitions are four inches thick and the walls six inches.

At the time the Minnesota Steel Company decided to build a plant at Morgan Park, near Duluth, Minn., it became necessary to house their employees, and there they built houses for 349 families. These were built of "Hydro-stone" block without exterior stucco. The interior walls are plastered on lath. Partitions are of wood studs covered with "Sackett board."

Reference should also be made to the work carried on by Grosvenor Atterbury in connection with the Russell Sage Foundation in Brooklyn, N. Y., where concrete houses built in sections or units have been used. A similar group is at present being erected at Youngstown, O., for the Buckeye Land Company.

The manufacturer faces not only competition in his finished product, but must face the competition for labor. It is a proven fact that the only way to hold laboring men and to make them satisfied is to house them properly. You may be interested in knowing that at our various mills we have found the Boy Scout movement to be a great means of keeping the men interested in the community, thereby tending to hold them.

Mr. Elmer F. Harris:* What is being done to house the individual bachelor laborer? We can take care of a large number

*Safety Director, Mesta Machine Company, Pittsburgh, Pa.

of any one class, such as Armenian, Lithuanian, Italian, etc., but men of different nationalities refuse to live together, with the result that we are losing the individuals who come to our works, for the reason that we have no accommodations for them. The point I wish to bring out is: What are other firms doing in the way of furnishing living places for those individuals who refuse to live in bunk houses, boarding houses, etc., with others of different nationalities?

Mr. O. P. Hipple:* I have charge of the maintenance of the Lodge Building, housing 130 white workmen, and the 12 bunk houses, which house 144 colored workmen, for the Westinghouse Electric & Manufacturing Company, which Mr. Wilson has just described to you.

While we were constructing the Lodge Building the writer was told that if we housed different nationalities together they would fight one another; also that we would have to have certain kinds of cooking for the different nationalities. We cook the same for all. There has been an occasional objection. The colored men asked for cornbread and syrup, and this was furnished them. I don't think you will find much trouble from either source. We keep a uniformed guard on the premises, which undoubtedly helps to maintain order.

The Westinghouse Electric & Manufacturing Company has bought 110 acres below Ardmore, between the Boulevard and the Greensburg Pike, and there is room for some 1000 houses. This land is very similar to that at Wilson, Pa., where the Steel Corporation is building a town.

I would like to know Mr. Forster's ideas in regard to segregation. There is a natural ravine, and it has been suggested that we develop it, with foreigners on one side and Americans on the other. Would also like to ask Mr. Forster if he knows of any corporations that have looked at the housing project from a different standpoint than the usual one. The usual practice seems to be to buy an acreage of unimproved ground and develop it. Has any manufacturer, instead of buying ground and developing it, bought ground which is already improved? If so, how does

*Charge, Maintenance of Lodge Building, Real Estate Department, Westinghouse Electric & Manufacturing Company, East Pittsburgh, Pa.

the cost compare with the present high cost of improving raw ground?

PROF. GEORGE W. CASE:* Mr. Forster has covered his subject in such an interesting and comprehensive manner that it is difficult to find a new angle from which to view it; however, the following story may be of interest. A Western Pennsylvania steel company was started, some fifty years ago, by a man who laid out for himself two lines to follow in building up a good organization. One was to provide and maintain first-class mechanical equipment; the other was to see that his workmen were provided with comfortable home surroundings in so far as his co-operation could assist them in obtaining such conditions. This tale relates to the success which accompanied his efforts in this welfare work.

The demand for the plant's product increased, and in seeking ways to meet the necessity of increased production one of the superintendents, who is now a successful banker and the man who related this incident to me, suggested that the working day for men be reduced from twelve hours to eight hours, which would allow the company to add another shift. This was a radical departure from the prevailing practice, and the feasibility of the scheme received much discussion. Neighboring mill men advised strongly against the innovation, contending that the short day would only provide the men with more time to spend in the saloons and increase the amount of drinking, which they felt was then giving them sufficient trouble. The story goes that the president of the company decided that if this were the main objection to the change he would put his theories to the test and determine whether his interest in the welfare of his men had accomplished any desirable results. The eight-hour day was, therefore, put into effect, and without increasing the tonnage rates the men were soon making as much in eight hours as they had been when working twelve hours. What was considered more encouraging by the president was that the men were spending their leisure time working about their homes.

Some years later the management of the company changed and the present management took charge. This management

*Professor of Sanitary Engineering, University of Pittsburgh, Pittsburgh, Pa.

maintains that if the company furnishes work for the men, the community should see that the men are properly housed, and that it is not the duty of the company to enter any activity designed to improve the living conditions of the men. This change in the attitude of the management was followed by the old employees leaving the plant for other plants, where they were quickly promoted to foremen in the departments in which they were experienced, and their places taken by a class of labor similar to that obtaining in the other plants.

I related this gossip the other day to the manager of a steel plant, giving the name of the plant and that of the author of the story, and he remarked that the bit of history interested him considerably, since the present condition of housing near the plant is bad, and that it was his understanding that the plant had failed to earn satisfactory returns under the new management, although it had prospered under the original management. The relation between profits and housing might be worthy of study.

A Representative of the Civic Club of Allegheny County, Pittsburgh, Pa.: The writer found much of interest in the discussions of Mr. Forster's paper by corporation representatives. To one who has the matter of housing much at heart it was good to observe the earnestness and interest of the professional men who are in the work of actual construction of houses for their various corporation employers. One noted distinctly the fallibility as well as the modesty of these men. Knowing the miserable failure of such towns as Gary, Ind., it was encouraging to note that the later towns of the Steel Corporation mentioned in the discussions have had some study put into into their general planning. It is, therefore, but a minor matter perhaps to note that in its new town at McDonald, O., near Youngstown, this corporation is apparently wasting street paving of a width of five feet, roadways being 23 feet between curbs instead of 18 feet, which is ample for residential streets of this character. The cost of this initial waste, as well as the cost of maintenance, can be determined by the mileage of said streets.

A sense of propriety prevented the Civic Club's representative from interrupting these discussions with any objections to

Mr. Forster's exposition. Now, at the risk of violating the generous courtesy of the Engineers' Society, are appended some impressions of this paper.

It should be noted, first of all, that Mr. Forster has a pleasant personality and is a facile speaker endowed with a manner that encourages, even though it does not always carry, conviction. His statistics and many of his ideas should prove helpful to those interested in the subject, but it is unfortunate that vitally important factors were either ignored or casually dismissed. This means, of course, that problems are not frankly and honestly faced so long as discussions are confined to details of planning or construction, valuable as such discussions may be. Until housing needs are clearly realized in their relation to the health, welfare, citizenship and efficiency of labor, and until the obligation to supply those needs has been properly apportioned throughout a particular community, we cannot know what is the best thing to do.

Mr. Forster's talk applied most specifically to industrial housing in "satellite cities." He referred to the possibility of co-operation where the community is not dominated by one manufacturing concern, but by a number who are mutually concerned in the stabilizing of labor, etc. The latter is Pittsburgh's phase of the question under discussion, and it was not really discussed as such. (Note the work in Bridgeport, Conn.)

Although injecting into the discussion the idea of "doing something for one's fellow man," the speaker displayed a conservatism nicely adjusted to such corporation executives doing housing work as are yet "unsocialized" and unfamiliar with the complexity of their problems. The resulting mixture of assumed altruism and practicality beclouded the accompanying demolition of "standards" of living which we have been gradually accepting as essential to our democracy.

Mr. Forster advised the initial adoption of standards more fitted to the foreigner as he and as the average American conceives him and as we have largely limited him, all in order that a legitimate return, say five per cent. net, may be had on the housing investment; such standards as "temporary houses of boards and tar paper until the corporation gets its breath in the emergency" and can build better dwellings; outside privies; no bath-tubs, etc.,

etc. We all realize the improbability of any sane corporation scrapping usable "temporary" shacks before it has to do so! Mr. Forster did claim the necessity of having running water in the houses and he spoke of the above omissions as temporary, but he did not dwell upon the likelihood of these omissions being supplied later due to a possible mysterious and rare change in the psychology of the hard-headed, financially compelled business man who conceived the project. The possibility of such a changed psychology is, after all, one of the vital factors, and should be frankly faced if we are to be practical.

In suggesting the reduction of living standards, Mr. Forster did imply the safeguarding of health. He failed, however, to note the fact that primitive housing conditions in small non-industrial communities are not exactly comparable to the same primitive conditions in congested industrial localities, and he failed also to note the particular health menace of outside privies. Although American men may be of a higher grade than many of our foreigners are now, he failed to note the obvious deduction that primitive housing conditions of the foreigner accentuate this difference in the grade of men, are an added handicap to them, and an added menace to the community because of this very fact. Believing, as he apparently does, in permitting such a handicap to be saddled upon the foreign laborer for what Mr. Forster too optimistically infers is a temporary period, he nevertheless stated his own and the very common and easily understood aversion to living as a neighbor of these foreigners because of their habits and manner of living. Therefore, his casual criticism of current Americanization propaganda was not particularly convincing or enlightening. Genuine and constructive criticism of this propaganda, although it might justifiably be made, is therefore beside the point in this critique, just as it was in Mr. Forster's exposition. His reply to an inquiry from a corporation representative suggested that the latter "take advantage of the God-given opportunity" afforded by the existence of a transverse ravine through company property to separate the foreigner from the American working men, thereby implying the fostering and maintenance of the class distinctions which in the present national crisis have been found to be such a serious national weakness. No one could

reasonably object to intelligent discrimination in establishing the homes for different nationalities, but it is certainly unwise, as well as un-American, to foster complete segregation. On the other hand, all practical men will probably agree with Mr. Forster upon the desirability of segregating the homes of negroes and whites in industrial districts at the present time unless we wish to risk race riots of the East St. Louis kind.

As already noted, Mr. Forster did not touch upon the phase of his problem which is exemplified in Pittsburgh. He failed to note that manufacturers in a city depend, more or less unconsciously, upon the city for homes for their workmen. He failed to emphasize the following vitally important facts:

1. That location in the city enables the manufacturers to side step responsibility for housing their workmen.

2. That the housing needs of these workmen are not met by any continued organized effort to provide proper homes.

3. That the speculator in real estate and in building reigns supreme, to the detriment of the workers.

4. That manufacturers or corporations may directly or indirectly lure laborers to the city and thus cause the congestion, overcrowding and illegal occupancy of houses that we have to-day in Pittsburgh.

5. That popular opinion is not yet sufficiently enlightened and advanced in this country to subscribe to municipal, state or national subsidy, promotion and control of housing construction as a matter of general welfare.

He cited the necessity of a fair return on investment to corporations which house their own men, commonly through a subsidiary housing company, and, although he made explicit inference that good housing produces more efficient workmen, and implicit inference that this is an asset to the manufacturer, he still claimed that living standards might be reduced in order to insure that fair dividend on a housing investment, and he failed to credit the corporation with the definite financial asset from the added efficiency and productiveness of its workmen, an asset which may perhaps be called somewhat intangible because not yet reduced to statistics, but which cannot be denied to exist and to be of considerable magnitude.

And finally, but not least of all, Mr. Forster's advocacy of variation in house design with uniformity in individual house plans was good enough so far as it went, but it fell far short of the needed discussion of land speculation, most economic use of land, adaptability of lot sizes to houses, transportation, and those other fundamentals of town planning so essential to the solution of the industrial and other phases of the housing problem.

Author's Closure: The problem of segregation is an interesting and sometimes a difficult one. There is no doubt that we have to segregate the negro from the Americans in the North as well as in the South. We have to provide for the segregation of the single negro men and for married men, who are boarding while their families are not with them, quite as well as for the negro families. Segregating foreigners living upon a lower scale than Americans is unquestionably desirable, particularly where it is desired to sell homes to Americans of the better class. The gentleman from the Westinghouse Electric & Manufacturing Company should look upon the ravine which separates his property as a providential one and put his Americans on one side and his foreigners on the other, and work back gradually from this ravine as the development grows. The Steel Corporation at its model industrial town at Morgan Park, near Duluth, has one section for foreigners living on a lower scale than the average American family, a section for Americans, and a third portion of the property set aside for the building later on of higher grade houses for foreigners as these go up in the living scale. While theoretically it is desirable from an Americanization point of view to draw no distinctions between Americans and foreigners, the practical solution undoubtedly is to arrange for segregation, and to have this segregation one of living scales brought about partly by difference in income and partly by points of view of the people as to what constitutes an adequate home.

Mr. Wilson raised the question of taking care of the bachelor or of the married man whose family is not yet with him. Fifty per cent. approximately of the average working force is made up of unmarried men or those who do not have their families with them, and taking care of them is a very important problem. It is well known that the labor turnover among such men is always

much higher than among those who have their families with them, even if they are only renting. One solution, of course, is having the men taken in as boarders by individual families. Such boarding, on the whole, we do not want to encourage, particularly where there are young girls in the families. It is less objectionable to have boarders where houses are designed to have two or more rooms partly detached from the rest of the family in which boarders can properly be accommodated. Most of the men, particularly in plants which are growing rapidly, must be accommodated in hotels or boarding houses. It has been my experience that the men object to the large barnlike hotels, and that the best results are secured where relatively small boarding houses, say fifteen to thirty men capacity, are provided, and where men of one nationality may flock together. Under a boarding boss of the same nationality such a unit will work out, on the whole, in a very satisfactory manner.

It must also be recognized that many foreigners like to do their own cooking, and there is no reason why they should not be given facilities for doing so. Boarders often have the privilege of cooking their food upon the family cook stove.

Foreigners very commonly do their own laundry work, and there should be facilities for this, and they should be encouraged to do their own washing and to do it frequently.

The question of the use of acreage as against improved property was also brought up by one of the speakers. In the statistics to which I referred the figures indicated that out of 236 housing developments two-thirds were new towns, 13 per cent. were in city sub-divisions, and 6.8 per cent. on city lots. I know of one development now about to be undertaken where, as an initial move, it was recommended that houses be built on 150 city lots for immediate use, and that the second stage be to build houses on property just outside of the city limits.

The average city lot suitable for workmen's houses in an industrial town will probably cost $400 to $500 with improvements. If you buy acreage at $1000 per acre, put eight houses on an acre, put in streets, sidewalks, sewers, water, and possibly electricity and gas, it will not take long to get lot costs quite closely approaching those which you will have to pay for property within city limits.

THE SITUATION IN REGARD TO MANGANESE, SULPHUR, PYRITE, AND SOME OTHER WAR MINERALS

By J. E. Johnson, Jr.*

This address is being made by me at the request of Mr. Robert Linton, of your Society. I urged upon him the fact that other men could be found who could do better what he desired to have done, but told him that I would do the best I could if he could not find anyone else. I want you to realize, therefore, that I am not here on the basis of any false pretense that I can tell you what you need to know better than any one else; quite the contrary.

The war has brought about a situation in regard to several minerals which is unprecedented in the world's history. America has been liberally endowed by Nature with most of those minerals which are required for the purposes of civilization, among the first of which are coal and iron ore, but in regard to others quantitively less important but still vital to our progress, Nature has not been so generous to us. Hitherto this has made no difference to us; cheap and unrestricted navigation to and from all parts of the world has supplied without difficulty those things of which our own supply was scanty or wanting, but with a blocade existing throughout a large part of the world, with a huge proportion of the world's total tonnage of ships sunk and most of the rest commandeered by the various Governments for war purposes, the supply of ships for commercial work has become almost a vanishing quantity. In some cases it is not a matter of price, but of a lack of bottoms at any price.

Some minerals which could be imported more cheaply than they could be produced here can no longer be obtained abroad except at prohibitive prices, and our own supplies must now be developed be the cost what it may. In regard to those minerals of which we have no supply of our own, the situation is exceed-

*Consulting Engineer and Metallurgist, New York, N. Y.

ingly serious. These are the underlying causes which have produced an abnormal situation in regard to the minerals of which I shall speak, but the details vary in the different cases.

MANGANESE

Manganese is one of the minerals with which Nature has been niggardly in her supply to America and it has been imported to supply our needs, either as ore or as ferromanganese. The demand comes from the fact that about 17 pounds of manganese, or roughly three-quarters of one per cent., are used per gross ton of steel to deoxidize the steel and make it a useful product. We are not using any more manganese per ton of steel than we were formerly; rather less, but our total consumption tends to rise because of the unprecedented output of the steel industry under present conditions.

We have had in the past three principal sources of supply, which are, in fact, the three principal manganese producing districts of the world: (1) The Caucasus Mountains of Southern Russia, where there is perhaps the world's largest supply of this indispensable mineral; (2) India; (3) Brazil. This is the order of importance of the districts from a tonnage point of view in the period before the war, though Brazil was a bad third, producing roughly only about one-quarter of a million tons as against nearly a million for the Caucasus. The Russian deposits are cut off from us entirely by the closing of the Dardanelles. The Indian fields are at so great a distance that the freight under present conditions has become absolutely prohibitive. Of the three principal fields, therefore, only the Brazilian remains available to us.

For several years past virtually no manganese has been produced in the United States, but present conditions have caused renewed activity in mining this mineral, and the Geological Survey advises me that the total supply of manganiferous materials in this country is considerable, although much of it is low grade. With development our domestic ores can supply a large part of our needs if we adapt our metallurgical practice to the existing conditions.

The metallurgical side of this situation is a vitally important one. There have been in the past only two varieties of manganese alloy in common use, spiegeleisen, containing about 20 per cent. manganese, 5 per cent. carbon and the rest iron; and ferromanganese of standard quality, containing 80 per cent. manganese, about six per cent. carbon and the rest iron.

You will note that the ratio of carbon to manganese is about one to four in spiegel, whereas it is about one to fourteen in ferro. This means that one per cent. of manganese imparted to the steel by spiegel would raise the carbon 25 points, whereas if imparted by ferro it would raise the carbon only about seven points. Assuming the carbon to be carried down to .08 in both cases, the total carbon with one per cent. manganese would be .33 in one case and .15 in the other. In the days when the Bessemer process was the only one of any importance for producing steel, and when rails were the principal steel product made, the use of spiegel was almost universal. It was melted in cupolas alongside those for supplying the Bessemer, was tapped as required from the cupola into a ladle which was charged with the required amount for a heat, taken to the converter, and poured into the bath after the completion of the blow. The .33 carbon is much less than that required for rails, and the remainder of the recarbonization was effected by adding straight pig-iron. When the open-hearth came in, all this was changed. The open-hearth brought about the application of steel to a multitude of purposes for which wrought-iron had been used in the past, and the steel to be suitable for these purposes must be low in carbon. For a vast proportion of the total output exclusive of rails .33 carbon is entirely too high. This situation brought about the use of ferromanganese, and once introduced, its use grew. On account of its small volume, it could be charged directly into the furnace or the steel ladle, and all the bother of handling another ladle of molten material was eliminated. As rails have become a decreasing percentage of our steel output, the importance of the low-carbon steels has grown greater and greater and in the period immediately before the war there was no sale for spiegeleisen. The New Jersey Zinc Company had stacked up more than 30 000 tons of spiegel which were virtually unsalable under the condi-

tions then prevailing. The material was produced as a by-product and the situation was a serious one for them. Within a few months after, the present conditions in the steel industry began to appear and this huge accumulation of spiegel was all sold at prices many dollars higher than those which the company would have been glad to take a few months earlier.

You will see that high-grade manganese ores are necessary if we are to produce ferro. It was for this reason that our numerous large deposits of low-grade materials have remained undeveloped. If more than a certain limited percentage of iron, roughly one-sixth of the amount of manganese, be present, standard 80 per cent. ferro cannot be produced. Manganese ores are ruined not alone by the presence of iron, but by phosphorus and silica as well. Phosphorus becomes increasingly important as the manganese content decreases, because the amount of alloy to be added obviously increases as the percentage of manganese in it decreases and a phosphorus content which might be tolerable in a 50 per cent. manganese ore, may be prohibitive in a 25 per cent. ore.

Silica is objectionable on account of the loss of manganese that it causes. Manganese is very much more active chemically than iron. It is easily possible to run an iron blast-furnace so as to keep the iron content of the slag down to .2 per cent. or under, but with manganese this is not the case. Each unit of silica carries away with it in the slag a proportion of manganese, this proportion depending roughly on the amount of other bases in the slag, and on the temperature at which the furnace is run. When the temperature is high the reduction of manganese is greater than when low, but we are not free even to attempt to make a complete recovery by raising the temperature indefinitely since we run into another difficulty by so doing. Manganese is volatile and is driven off as a vapor in the hearth, and passes out with the gases in a huge yellow cloud which you can see coming out of the boiler stack at most ferromanganese furnaces. The cinder, on the other hand, always has a strong yellowish green tint, characteristic of manganiferous slags. It used to be considered that of the total manganes charged, one-third was lost, but practice in this respect has been greatly improved in recent

years. One of the best furnacemen in the country claims to be running with a loss of 15 per cent. I have heard stories of other losses much lower than this, but the information was so indirect that I cannot feel assured of its correctness.

Returning now to the ores, it has been customary for the reasons just given to penalize all silica in excess of 12 per cent. The recoverable manganese in the ore becomes less and less as the silica rises. This condition has made worthless the low manganese ores, even when they were approximately free from iron, because manganese could not be produced from them without a loss that was commercially prohibitive.

To summarize, we have here then the following situation:

A small tonnage of high-grade ore in the United States; a considerable tonnage of low-grade manganiferous material not suitable for ferro manufacture because of either too much iron, too much silica, or too much phosphorus, or a combination of all three; a steel works demand for a manganese alloy with a low ratio of carbon to manganese, so that low-carbon steels can be produced containing enough manganese to deoxidize them thoroughly; and lastly the requirement that an ore to produce the desired alloy must be pure.

In view of the present scarcity of ships, which has already severely limited our importation of rich manganese ore, and which threatens to limit it still more severely, what are we going to do? The answer is not to be found in a single sentence, but only by applying these rigid conditions to each problem and working out the best solution on its own merits. The solutions are in general to be found along four lines:

1. The absolute conservation of ferro for steels, the requirements of which rigidly demand that they be low in carbon.

2. Breaking down our metallurgical prejudice in favor of the exclusive use of high-grade ferro and using 70, 60, 50, 40 and 30 per cent. alloys for those purposes in which the carbon and manganese requirements of the product permit their utilization. This is a matter of psychology as much as of practice. We must overcome the inertia of the steel men which very naturally prejudice them in favor of the practice to which they are accus-

tomed and which is convenient. They must get out of this rut and learn to do something different, not only because it may be cheaper, but because the outcome of the war and the safety of our country as a whole depend upon our production of steel.

3. The specifications for steel should be rigidly revised by all steel manufactures and steel users, perhaps under the auspices of the American Society for Testing Materials, so as to lower the manganese requirements in all cases where the absolute necessities of the case do not require them to be as high as at present. Some of our best steel makers are convinced that the present specifications for manganese in many classes of material are higher than they need to be, and I will suggest to you the possibility that in the manufacture of steel, manganese, like charity, may cover a multitude of sins. I believe that well-made steel can have its manganese content distinctly lowered and still be better than a badly made steel dosed with a parting hypodermic of manganese to make it stagger through the tests.

4. Changes in the metallurgy of manganese itself. The electric furnace has been used for several years in Europe in the production of ferro, and its application to this purpose has made a good start in the United States. It has distinct advantages over the blast-furnace under present conditions, for the price of the product is so high that for its production the balance in favor of coke as against electric power no longer prevails. The electric furnace has the great advantage that it uses very little fuel in comparison with the blast-furnace and therefore does not have to contend with anything like the silica which comes from that source in the blast-furnace, all of which takes its toll from the manganese when it goes out as slag. Further than this, part of the silica, a very considerable part, can be reduced and combined with the manganese to form a ferrosilicon manganese. This has a distinct advantage. It prevents the loss of manganese which accompanies the silica when the latter is slagged, and what is even more important, it forces down the carbon. I am advised that in ferro containing 10 or 15 per cent. of silicon, the carbon is only about two per cent. instead of six.

This means that the carbon-manganese ratio in such a material is far lower than in straight ferro, even though its content of manganese be materially lower than that of the standard alloy. This offers us possibilities which I believe have not yet been fully realized. I refer to the possibility of using a mixture of spiegel, or low-grade ferro, with this silico-ferro, so as to obtain the required amount of manganese without having the average carbon in the mixture rise above the desired percentage.

In talking with one of the electric furnace people recently I was told that by melting the ferromanganese before charging, a saving of about 20 per cent. in the amount required could be made. This of course is a statement of an interested party, but there seem to be good reasons for believing that at least some improvement could be made in this way, and if so, there is no excuse under present conditions for not making it.

BENEFICIATION OF MANGANESE ORES

You will naturally ask why the lower grade ores of manganese cannot be treated like other low-grade ores and brought up to standard metallurgical grade by washing, jigging or some other process. The answer to this question is twofold. First, the cheapness of the imported ores has until recently made such a course commercially unprofitable. Second, the nature of the manganese minerals themselves prevents satisfactory working. Manganese seems to have the faculty of diffusing itself through gangue material in a condition of almost impalpable fineness, and while in many cases there is no chemical union between the two, the problem of separating them by any of the accepted methods of ore treatment has so far failed absolutely. Of course when lumpy manganese is associated with clay, the latter can be washed out, or if it is mixed with particles of rock, these can be jigged out, but there is a great deal of material containing 20 to 30 per cent. of manganese and about 25 per cent. of silica with a considerable amount of alumina. This material known as "wad," has a consistency about like that of stove polish and no method of ore treatment so far developed has sufficed for the apparently easy task of separating this simple mechanical mixture. Experiments are under way at the present time looking to a solution

of this problem along novel lines, but the investigation is as yet incomplete and is entirely unprotected by patents. We are hopeful that within a few months low-grade material now worthless can be converted into extremely high-grade ferro, but it is obviously inexpedient to speak further of this at the present time.

SUBSTITUTES FOR MANGANESE

Various substitutes for manganese have been proposed. Very many years ago Henry D. Hibbard tried deoxidizing a heat of steel with ferrosilicon. He "killed" the heat absolutely so that it poured like cream, but when the ingot went through the rolls it broke up into pieces more like bird shot than like billets. In other words, in spite of its higher heat of combustion, silicon has nothing like the power of manganese in deoxidizing steel. It has been found that about 25 per cent. of the work of deoxidation could be done by silicon, but that the remainder had to be done by ferro. I am advised that in the electric furnace this condition does not exist, and that a heat can be so thoroughly killed and deoxidized that good steel can be made without the addition of any manganese. This is true also in crucible steel. It is doubtful, however, if our prejudices would permit us to accept such steel without a much longer time of trial than we have available under present conditions. There have been various proposals to use other metalloids, or particular combinations of these, such as calcium-silicon or calcium-silicon-aluminum, in such proportions that after conversion to oxid in deoxidizing the bath their oxids would form a fluid slag and so eliminate themselves from the steel in the same way that the oxid in manganese does. I am told that this has been done extensively in Europe, but this practice has not been developed to any important extent in this country.

One of the most promising methods of bettering conditions is to alter our practice as to leave the manganese in rather than to introduce it at the end of the process. While ores high enough in manganese to be considered as ores of that element are scarce, there are available enormous tonnages of manganiferous iron ore, and some of even the very lean-grade manganiferous material can be charged into the furnace to produce a high-manganese pig-iron without causing excessive expense by increasing the slag volume.

Then by starting steel manufacture with an iron containing more than one or preferably two per cent. of manganese, an important amount of this manganese can be left in the bath at the conclusion of the oxidizing operation, which is the essence of steel making. This manganese has two good effects. It tends by its presence to prevent excessive oxidation of the heat, and it replaces at least a part of the manganese which must otherwise come from the scarce high-grade alloys. Somewhat similar results can be obtained by adding enough manganese ore to the slag to make it decidedly manganiferous. I am informed that by this means there occurs a very considerable reduction of the manganese oxid to metallic manganese by the metalloids of the bath, and that the manganese content of the iron rises as the heat progresses. My information is not sufficient to permit any figures as to the relative consumption of manganese by the two procedures just described. My feeling is that the efficiency of the manganese would be higher if charged into the blast-furnace and almost completely reduced there, than if charged into the open-hearth and only partially reduced.

The situation which confronts us in regard to manganese is acute and it is a commercial necessity and a patriotic duty to conserve the supply, not by one means, but all within our power. I hope to see shortly a meeting of the metallurgists of all the steel plants of the country under instruction from the executives of their respective companies to thresh out thoroughly all these matters; each one to have instructions from his chief, not to strive for a partisan advantage, but as a matter of patriotic duty to give to all the experience and knowledge of each for the benefit of the country as a whole.

Let me close this portion of my subject with a warning to you. The thing for the steel men of this country to hope for is that the price of manganese will go higher. The shipping situation is so serious that ships are almost certain to be taken out of the manganese trade, and that will cut off a corresponding percentage of our present supply of manganese ore. It is positively known that our supplies in this country are sufficient to last us for two or three years if they are intelligently handled, but they will do us no good unless they are developed, and they will not be

developed unless it can be done at a profit to someone. I recently urged upon the Government bureaus, with the utmost emphasis at my command, the absolute necessity of a pronouncement from the highest authority in Washington that the price of manganese ore would not be regulated downward during the period of the war, and I have recommended to them that if pursuant to this policy the price of manganese should rise, as it probably would, the steel makers should be allowed a compensating increase in the prices fixed for their product. The bureaus of the Government are, I believe, favorable to this idea, and if you work along this line you can accomplish much, but if you take the short-sighted view of holding down the price of manganese by price regulation, the steel industry as a whole, and the country with it, is likely to suffer, because manganese which you can get at $500 a ton is much better than manganese, at a nominal price of $100, which you can't get.

PYRITE AND SULPHUR

It has been said that the degree of civilization of a nation could be accurately determined by the amount of sulphuric acid that it used per capita. Personally I do not believe that this is so good an index as the amount of steel used per capita, but it is certain that, of all the chemicals necessary to industrial civilization, sulphuric acid is easily the most important. Sulphuric acid is made by two processes, both beginning with the combustion of sulphur to SO_2. In the chamber process the SO_2 is further oxidized in the presence of nitric acid and steam to H_2SO_4. In the contact process the nitric acid and steam are dispensed with. Instead there is used a "contact mass," our ignorance of whose true function we conceal by calling it a catalyzer. This, without being changed itself, acts directly on the SO_2 and oxygen remaining unburnt in the gases, to convert them to SO_3. By this method concentrated sulphuric acid can be made directly, while in the older chamber process it is first made in a dilute state and afterwards concentrated by distilling off the excess water. The source of the SO_2 is the matter which especially concerns us. This comes from the combustion of elemental sulphur or from the combustion of pyrite (FeS_2). The latter at a low temperature burns to Fe_2O_3 and SO_2, this

action being very nearly complete when no copper sulphid is present. Another source of sulphur is pyrrhotite (FeS), but this contains a much smaller quantity of sulphur per ton than does pyrite (36.4 per cent. against 53.3 per cent.), and so is less desirable than the latter.

In normal times a predominant portion of the sulphuric acid manufactured in the country is used in the fertilizer industry for converting the phosphate of phosphate rock from the insoluble to the soluble form. Phosphate rock is the crude form of calcium phosphate, only very slightly water-soluble. By removing a portion of the lime with sulphuric acid, the phosphate is made water-soluble and becomes one of our most valuable fertilizers. The principal phosphate beds which have so far been developed are those of Tennessee, South Carolina and Florida, and a large part of the sulphuric acid industry has grown up in the South Atlantic coast region tributary to ocean traffic. For this reason one of the principal sources of sulphur has been the Spanish pyrite from the Rio Tinto mines. Some native pyrite is mined in Virginia and in other regions, but this not generally being copper bearing has no by-product value and therefore is not so desirable as the Spanish pyrite.

In addition to sulphid of iron, the ores of copper and of zinc generally occur as sulphids, and the metallurgy of those metals is such that the sulphur must be removed before the ore can be smelted. This removal is effected by roasting either in a vertical multiple-hearth furnace with revolving rabbles, or in heaps in the open air. Where the mines occur in isolated districts, as is the case in a great proportion of the western copper and zinc mines, the sulphur dioxid goes to waste, or in fact to an even more objectionable end, because it kills all vegetation except broom sage for miles around the plant. This has been the occasion of innumerable suits by the farmers against the smelters, and in some cases works have been closed by the courts because of the damage done to agricultural districts. In some cases the works have installed sulphuric acid plants to convert the SO_2 to sulphuric acid, even though the latter could be sold only at cost, in order to prevent the works from being shut down by injunction. It is well known that the huge sulphuric acid plant of the

Tennessee Copper Company was built primarily for this reason, and I understand that there are two plants in the West, recently completed or now under construction, in which the motives were similar. Eventually, some method will be found for utilizing the sulphur wasted in this way, but up to the present it has not been a dominant factor in sulphuric acid production.

In addition to the sulphid ores, there are great deposits of native sulphur in the coastal plains around the Gulf of Mexico. One of the principal ones is in Louisiana and the other at Freeport, Tex. The sulphur is overlaid by a marsh, which made extraction by ordinary mining methods impracticable, though the attempt to prove this conclusively resulted in a number of financial failures.

Some twenty years ago Herman Frasch, who had achieved distinction and some wealth as a chemist in the employ of the Standard Oil Company, conceived the wild idea of forcing down water hot enough to melt the sulphur and bringing it back by a return pipe. He started in on the enterprise and before long his money was all gone. He was reduced to acting as tool dresser in a blacksmith shop and his wife was boarding the few workmen whom he was still able to pay, but finally success was achieved. The required temperature of the water corresponds to a steam pressure of about 100 pounds per square inch. The water is heated in huge batteries of boilers and forced by the boiler pressure through drilled wells down into the sulphur, which is melted away and brought out through a return pipe. The discharge from this pipe is led to the stock pile, on which the sulphur freezes as the water cools off in running down over it. The success achieved has been so great that the Sicilian mines of native sulphur were practically put out of business several years before the war and American sulphur controlled the markets of the world.

In spite of all these sources of domestic sulphur the importation of Spanish pyrite has run to many hundreds of thousands of tons per year, all of which is now practically cut off by the scarcity of shipping; and the Bureau of Mines estimates that unless some other source of supply be developed the United States will be short of its requirements of sulphuric acid for next year by 1 750 000 tons

The same comments in regard to price regulation apply in the case of the pyrite as in the case of manganese. If the Government will encourage a rise in the price of this material there is plenty to be had, but it probably cannot be had without assurance that the price will not be arbitrarily cut after a man has invested his money in the hope of making sales, or even on the basis of actual contracts, at existing prices.

CHROMIUM

The importance of chromium to the steel industry is twofold:

1. When alloyed with steel in small percentages it exercises a tremendous effect on the physical qualities of the material, raising the elastic limit and increasing the hardness. It also has a marked influence in intensifying the effect of other alloying elements. Chrome steels with high percentages of chromium are used where extreme hardness is desired, as in crusher jaws, stamp dies, roll shells, and the like. When alloyed in smaller percentages with vanadium or nickel it gives wonderful properties to steel for high-grade construction purposes. Automobile and aeroplane steels are very largely chromium steels.

2. It is used in the form of oxid as a refractory. The oxid has an extremely high melting point and chemically is exceedingly inactive. For this reason chrome bricks have become almost indispensable in certain parts of the open-hearth furnace.

Our supplies of this material have come in the past principally from Greece, New Caledonia, Rhodesia and Russia. These are all far distant points measured in terms of present-day freight rates, hence our recent supplies of chromium have been woefully inadequate and the price has risen correspondingly. This has fostered the development of mines in Canada and later in this country. Chromium appears, on this continent at least, to be a pockety material. It occurs as a segregation or as a breaking-down product of certain eruptive rocks, and deposits of this character are in general of small size and indefinite nature. Considerable interest has been aroused on the west coast, where there are a number of deposits, and there is room to hope that, in addi-

tion to those which are now producing, some others will be able to make an acceptable product by the introduction of ore-dressing methods.

Except through governmental action, which now appears improbable, the price of chromium will probably not decline while the war continues, for there is no hope that the shipping situation will ease up for a year or more, and little hope that we shall develop mines of chromium in this country comparable with those from which our supply has come in the past.

POTASH

This perhaps is one of the most interesting of the war minerals. The percentage of potassium contained in the earth's crust is much larger than that of chromium, but its chemical affinities are so strong that the vast bulk of its occurrences is in combination with other substances, these combinations being so strong that to break them up costs more than the potash is worth in normal times.

The material is needed for a vast number of purposes in the chemical indutsry, but the bulk of the consumption is as an ingredient in fertilizer. The effect of the addition of this material to the soil in comparative tests is often little short of magical, and in the growth of some crops it is indispensable. For instance, it is claimed that the famous Albemarle pippins cannot be grown except in the feldspar belt. I assume that this is because in that belt they can secure a supply of potash by the action of the vegetable acids on feldspar. The only natural agencies which seem able to dissociate potash from the silica to which it is generally tightly bound in one way or another appear to be the actions of plant life. The occurrence of potash in sea water is presumably due to this action, since we know that marine growths contain on the average much more of this material than land plants, and the most important natural sources of potash have their origin in sea water in one way or another. By all odds the most important deposits known in the world are those of Germany, in which salt beds of immense extent and lying at considerable depths underground contain large quantities of soluble potassium compounds which can be separated out by solution, fractional crystallization,

etc. The cheapness of potash from this source in the period before the war was such that it displaced the supply from all other sources, in spite of heavy export taxes which incidentally were imposed by the German Government directly contrary to its promises. Some small quantities of potash made from wood-ash were produced in Canada, but this was relatively impure in quality and insignificant in tonnage. With the blockade of German ports, which began at the breaking out of the great war, German potash was absolutely cut off and supplies on hand were quickly exhausted. The price, which I understand used to be for the ordinary commercial grades from $30 to $60 a ton, is $400 and $500 a ton, and for some of the better grades even more than this. I am speaking in very general terms, because I do not follow the market conditions in regard to potash salts, and I do not expect you to take my statements in regard to prices in any except the most general sense. Whatever the price may be, the shortage has been acute and has stimulated attempts to obtain potash from other sources. One of the most interesting attempts is the process of obtaining potash from kelp, which grows in great abundance on many parts of the Pacific coast. Under-water mowing machines have been built whereby the long blades of kelp are cut several feet below the surface of the water, picked up and loaded into scows. The scows are taken ashore, the kelp unloaded and dried, the leaves burned, the ash leached, and the potash crystallized out from the leach water. The beds of kelp were supposed to be inexhaustible, but it must be understood that "inexhaustible" as applied to ordinary operations loses its significance when applied to mechanical operations on a large scale, and the visible supply of kelp has been materially reduced. Another source of potash from which much is hoped is Searles Lake in California, where deep drilling has disclosed the presence of beds of potash-bearing salts similar to, but presumably more limited in extent than those of Germany. Some development has been carried on, with the details of which I am not familiar, but the general understanding is that the property has so far produced more litigation than potash, there being two or three claimants in addition to the Government, which is making a fight for the retention of these beds in its own hands. A third source of potash is the alunite

deposits of the Southwest. Alunite is a double sulphate of potash and alumina, which is normally insoluble in water, but one molecule of sulphuric acid is driven off by roasting, and the remaining sulphate of potash becomes soluble and can be extracted from the alumina by leaching and evaporation. It is understood that some potash is being commercially produced by this process. Several processes have been proposed for extracting potash from feldspar and kindred minerals, nearly all of which are combinations of silica, potash and alumina. In the endeavor to extract potash, and perhaps silica and alumina, in commercial form from these materials, a great deal of money has been spent. A little of it I know about personally, because I spent it myself. Some of the processes have great promise—my own did on paper—but a good many of them have struck snags in operation, and I am unable to say that any actual potash is being produced commercially at this time by any of these processes. In general, it seems safe to say that the potash, being a relatively small percentage of the feldspar, commonly not more than ten per cent. and often less, it is unlikely that any process will succeed which does not aim at the utilization of the silica or the alumina as well as the potash. Some of the best thought out processes are based on the assumption that the potash will be the by-product.

In conclusion, I wish to leave with you one thought in connection with that event to which all our energies and hopes are directed—the settlement of the war on terms satisfactory to us. Many of the questions involved are matters of world politics which we perhaps may not be competent to discuss, but one of them is a matter in which our knowledge and opinion should guide the rest of the world. In recent years great deposits of potash have been discovered in Alsace. I understand that little is known about these yet except that they are extensive. In the period after the war we can well conceive that Germany will be impoverished and she will be unable to pay in money for the crimes which she has committed, but she may be made to pay in resources which can be readily turned into cash, and of these one of the best is obviously a vitally important fertilizing material like potash, of which the world's supply is all too scanty. But Alsace-Lorraine involves a question even more important, if such a thing

be possible, than justice to France. It involves the possible future safety of the world. You do not need me to tell you that the raw materials of war to-day are iron and steel. Without them no nation at war could last a week. In Lorraine and Luxemburg is one of the greatest deposits of ore in the world, low grade it is true, measured by our standards, but still commercially of immense value and utilized to the extent of 90 per cent. in Germany's iron industry before the war. This ore body then constitutes a huge potential arsenal, for without it or its equivalent all other arsenals would be useless. The question then which will confront the world at the peace conference is: To whom shall be entrusted the guardianship of a great potential arsenal—Germany, who has proven herself an assassin ready to arm herself to the teeth and spring on her victim unaware, or France, who in spite of hardship and suffering has kept burning in a steady and brilliant blaze the fires of liberty, civilization and peaceful industry? This is a question which politicians do not understand. It is one of your great duties as the iron and steel men of the world's greatest steel center to force on the public an understanding of it. Then intelligent opinion will demand insistently that the slogan which controls in the disposition of Alsace and Lorraine be that which your work in the past ten years has made famous—"Safety First."

DISCUSSION

MR. W. L. AFFELDER:* The paper is now open for discussion. It is rather hard for a coal man as Chairman of this Section to invite discussion of a paper of this kind. On one point that was brought out I think there might be some discussion—the reason why all these intermediate points of manganese between 20 and 80 are not used.

MR. JOHNSON: The steel makers will not use them. That they are used to doing the other thing is the only reason I know. Eighty per cent. has become standard, and it is so easy that it has driven everything else out of the market. There is no reason at all why any other per cent. of alloy should not be used, depending on the standard of the steel to be made.

F. N. SPELLER:† Mr. Johnson in his paper this evening mentions two elements which might very often be left out of specifications. I refer to sulphur and manganese. The automatic regulation of these could usually be left to the manufacturer provided the physical requirements were specified with fair limitations When the steel can be forged and rolled without damage there is little danger of the sulphur causing trouble in service. The worst that can be said of sulphur in excess of the amount that will permit of hot working without injury is that it segregates rather badly. The manganese contents should be much wider, especially as to the low limit, so as to permit of economy. If permitted to do so by the specifications, the manufacturer can often control the steel so as to get good results with less than the manganese specified. I would like to see the low limit of manganese made .15 or .20 per cent. for soft steel. There is no doubt room for economy in the use of silico-manganese alloys graded according to the manganese contents which may be used in the higher carbon steels, as Mr. Johnson has pointed out, but in the soft steels we are, of course, confined to the use of high-manganese alloys.

*General Manager, Coal and Coke Subsidiaries of J. H. Hillman & Sons Company, Pittsburgh, Pa.

†Metallurgical Engineer, National Tube Company, Pittsburgh, Pa.

MR. AFFELDER: Has any one had any experience with manganese alloy between 20 and 80 per cent.?

MR. GEORGE D. CHAMBERLAIN:* There is some little alloy used ranging from 30 to 40, and in some cases over that, but not nearly to the extent that is possible. I think the main reason is prejudice, as has been stated. The removal of this prejudice, I think, offers one of the greatest possibilities of conserving manganese.

MR. L. E. RIDDLE:† At the City Furnaces we have been making manganese products for a number of years. In changing a furnace producing ferromanganese to pig-iron we made some off-grade casts, and in the past we have had trouble shipping 30 to 60 per cent. product, but during the last year or two we have not experienced this trouble. Likely before the war closes we will be forced to use practically all Brazilian ore. We do get a small quantity of Virginia ores, and I think if they could find a way to mine more of this ore and the price were fixed so that it would be profitable enough to encourage more extensive operations it would be a great help to our country because of the scarcity of manganese ore. Some of the manganese ore we get from Virginia is equal to the best foreign ores which we receive, the analysis showing about 43 per cent. manganese, 1 per cent. iron and from 2 to 3 per cent. silica. One of the drawbacks is the fact that we receive it in very small quantities. The trouble down in Virginia seems to be that they do not seem to realize the magnitude of a blast-furnace and the enormous quantity of ore that is consumed. They have never awakened to blast-furnace requirements. For instance: An ore agent traveling in Virginia saw some specimens of native ore displayed in a drug store window and inquired as to the analyses and the amount they could produce. Being informed that it was a high-grade ore, he inquired: "Have you got lots of it?" The druggist replied: "Any God's quantity." "Can you get it out and have you plenty of

*Metallurgist, South Side Works, Jones & Laughlin Steel Co., Pittsburgh, Pa.

†General Superintendent, Isabella Furnaces, Carnegie Steel Company, Etna, Pa.

labor to get out all we would need?" "Yes, we can get out any God's quantity." The ore agent then said: "We will take about fifty cars per week." "Oh, my God!" the druggist replied; "there is not that much altogether."

As we have need for it now, it is unfortunate that the ore-bodies have never been developed as they might have been. The amount they are able to get out is so small in comparison with requirements that everything that can be done to increase the output of native ore will be a great help in the great struggle that is now going on.

It might be interesting to know that we have been finding potash of commercial value in our ferromanganese flue dust. We have sold about a thousand tons in the last year. When we started after potash several years ago, our blast-furnace chemists, being unfamiliar with the analyses, did not find it in large enough percentage to make it of commercial value, but they are now able to get as high as 15 per cent. potash in this dust. Pig-iron dust from furnaces using Mesaba and Old Range ores is of no value, as it contains less than .25 per cent K_2O. At the Isabella Furnaces we ship to fertilizer manufacturers flue dust that contains from 8 to 15 per cent. water-soluble potash. All the potash exists as sulphate, and as the dust also contains 20 per cent. manganese, 7 per cent. lime, and 3 per cent. magnesium, it makes a very good filler for standard fertilizers. Manganese is beneficial to the soil if the soil is not acid. The potassium sulphate can be leached out of the dust, and we would be able to get probably 400 to 500 pounds per ton, but not being forced to go into the leaching business we take the easier way and ship all raw dust containing over 5 per cent. water-soluble potash. We have made several experiments in leaching this dust and are satisfied that if necessity required us to produce K_2SO_4 we could extract it.

Mr. Johnson: Can you not recover the manganese?

Mr. L. E. Riddle: We tried to sinter ferromanganese flue-dust, but were not successful. We tried to sinter and briquet the raw flue-dust, and also tried it in combination of dust, scale and iron ores, and in each case, after cooling, the manganese dust

would separate, as it would not combine, and upon shaking the clinker or briquet the dust would run out.

MR. AFFELDER: Where does the potash come from, Mr. Johnson?

MR. JOHNSON: The sources of potash vary a good deal. There is some in the coke, because the coke was originally a vegetable growth, and nearly all plants have some potash in them. It runs in my mind that it is about one-fourth per cent. potash in the coke. And in some of the ores that come about the eruptive rocks there is potash, and I believe there is a little in limestone. Any one interested in that will find a paper by Mr. R. J. Wysor, in the Transactions of the American Institute of Mining Engineers,* about a year ago, in which he gave a potash balance showing where it came from and where it went to. Something I did not mention in that connection—something of considerable importance that I simply forgot—is that in California they are using the cement mills as potash producers. They put feldspar in the mix, and the feldspar is decomposed by the sintering action in the kiln, the potash is volatilized and goes over in fumes and they knock down all the potash out of the gas. The potash goes into something that is a cross between a fume and a vapor. It is microscopically fine and very difficult to catch, but this Cottrell process knocks it down. Putting in the potash in the form of feldspar, which does not cost anything, they found they did not get all of it out. They experimented and found that it did not all go into the soluble form, so they began to put in fluorspar, which frees the potash and is in turn driven off as siliconfluorid and knocked down with the flue-dust. It goes back into the form of fluorspar, is left by the leaching of the dust and is put back along with the other dust in the cement kiln. Thus the fluorspar simply circulates continuously in the system, making soluble its equivalent of potash. Then they found that they did not get all the potash by leaching, but that by keeping the temperature of the leach water around 200 degeres they could get about 60 per cent. of the whole potash charge, and at this plant they claim that the potash is

*Monthly Bulletin, American Institute of Mining Engineers, January, 1917, pp. 1-32.

paying for the whole cost of the operation and the cement is simply velvet. This is one of the most important sources of commercial potash.

MR. AFFELDER: What is pyrite worth a ton commercially at the present time?

MR. JOHNSON: I don't think I can tell you. I can easily find out. I think American sulphur is about $22 a ton, which means pyrite would be about $11 or $12.

MR. AFFELDER: Under present conditions in the coal business would it not pay some of our mines to ship pyrites?

MR. JOHNSON: It is being done. That is another thing I forgot. Coal brasses which are jigged out are sold to pyrite manufacturers. They are almost as good for fertilizers as any other pyrite. It contains some carbonaceous matter and that makes the sulphuric acid black, but the fertilizer manufacturer finds that he cannot sell any kind of fertilizer that is not black, so that does not make any difference.

MR. RIDDLE: The dust we get containing potash is caught in the last pass of the stove and the boilers. The very richest of the dust is caught at the colder parts of the boiler.

MR. JOHNSON: Yes, it does not precipitate out until it gets very cold.

MR. H. DARLINGTON:* I am very glad that Mr. Johnson has taken the attitude that these demands for these things can be met. There are very few demands that cannot be met, though perhaps at a sacrifice in quality. This is true of pyrite and probably of chromium. The production of potash is being greatly increased. The Engineers' Society of Western Pennsylvania should be particularly interested in this state. The state of Pennsylvania itself has done very little in the way of adding to the country's information as to its resources. Here in Western Pennsylvania we

*Pennsylvania Salt Manufacturing Co., Natrona, Pa.

know that we have coal, oil and gas, but many of us have forgotten that at one time we were the great source of the iron supply of the United States. At one time we produced more iron ore than all the other states. You cannot readily find to-day what the resources of Pennsylvania are aside from the products which are gross tonnage. Down in the eastern end of the state a hundred years ago manganese was produced, chromium ore was produced in quantity to supply the demand for the United States, and nickel ore was produced, the nickel production being subsidized by the United States Government. That is all forgotten to-day. The Old Gap mines in Lancaster county produced all the ore that went into the manufacture of our nickel. These mines are closed and very little is known about them. Those who have information on these mines perhaps do not want the public to know anything about them. The state itself has no one actively engaged to-day in putting people in touch with these resources. We have no geological survey which is active. If we did have, the iron and steel men in the state would know where within the state of Pennsylvania they could look for manganese; the potash man would know where he could go to get limestone that is high in potash, or clay that is high in potash, or where in the eastern part of the state he could get feldspar that is high in potash, for Pennsylvania has very fine feldspar deposits which have been mined for years. Unless these things are brought to public attention they can do us very little immediate good. Our state is the richest in the Union, and it should have pride enough to know its resources and their location and to bring them to the attention of the people.

Even pyrite was produced in Pennsylvania. It was mined in the eastern end of the state about ten years ago, but the mine was abandoned because bringing pyrite from Spain was cheaper than shipping to Philadelphia. There are large pyrite deposits in Virginia, but it costs more to bring the product to Baltimore than to bring it from Spain. The ore that comes from Spain is better, so why go to Virginia?

The iron mines in Cornwall and in Lebanon county produce 100 tons a day of concentrates that run 35 per cent. sulphur. The sulphur is thrown away, and about five tons of cobalt are also

thrown away daily. Very few of you know that cobalt is produced in Pennsylvania. These things are not known, because this great and rich state of Pennsylvania has delegated the investigation of its resources entirely to the Government, and it is entirely up to the United States Geological Survey. The appropriations of the state for geological work are not large. They should be increased and the best class of men should be employed.

Mr. James O. Handy:* I have learned of a considerable number of undeveloped manganese deposits in Virginia. One has lain idle since about 1890. Several carloads of the ore that were tried out indicate that it is a very good ore.

Mr. Affelder: Is any development going on at the present time in Virginia?

Mr. Johnson: I understand there is great activity there. I know the Government has been interested in sending people down there. Mr. Allen Rodgers, one of our best geologists, has been there at his own expense, and Professor Richards, of Boston Tech., went with him. They went there to see what they could find about the Virginia deposits and whether they could help in the treatment of these ores. Professor Richards is a specialist in that line. There is some manganese being mined at the Piedmont mine, below Lynchburg. I was in that mine about ten years ago. They were digging around in the ground like a mole and some manganese had been recovered, but so small in quantity that they were shipping it all in barrels for paint. Exactly what has been done lately I do not know. But I had a letter from Virginia about two men who became wealthy over night from shipping manganese, and I know it is authentic. That indicates that there is a great deal of development down there. That development extends all the way down through Virginia. I do not know much about North Carolina. There are indications of manganese in South Carolina, and quite a little in Georgia, but not much in Alabama. There is quite a good deal of activity in regard to manganese in Arkansas now. The Central West and even the Pacific coast have considerable quantities of manganese,

*Director of Laboratories, Pittsburgh Testing Laboratory, Pittsburgh, Pa.

and it is being produced in the Southwest in Arizona and New Mexico at the present time. They have some high-grade material, but they complain that, on account of high freight rates, they work for the railroads. There is some manganese on the Pacific coast. There are commercial quantities at Philipsburg in Montana, and some at Leadville, Colorado, and quite a large quantity of manganese, carbonate and silicate in the Butte district. So the country has a number of districts in which there is considerable manganese, and the Geological Survey assured me that their estimates of production made early in the year had all been exceeded even at the present time, showing that people are finding out that they can make money in manganese and are producing it 20 to 30 per cent. faster than the United States Geological Survey estimates. Thus the conditions as to domestic production are distinctly gratifying. The quantity is sufficient, if intelligently used, to assure our requirements for the steel industry for three or four years to come, without exhausting our own deposits. The situation is not encouraging except through co-operation with the steelmakers through the use of low-grade manganese. This is vital, because most of that available is not high grade.

Mr. Richard R. Hice:* For information I might say that we have at present in Pennsylvania one producer of manganese, and I believe three of pyrite. I would like to ask Mr. Johnson the low limit in chromium ores that can be used. I ask this having in mind the Woods mine, Lancaster county, which was forced out of business a number of years ago by higher grade chromium ore.

Mr. Johnson: I am sorry I cannot answer that question. I understand they prepare ores that run about 60 per cent. of chromium, possibly $Cr_2 O_5$. But just down to what limits it will be taken now I do not know. I imagine chromium is so scarce that there is no such thing as a low limit. If a man could make 15 per cent. chromium in a blast-furnace he could find a sale for it, and if he could make a low-carbon material in an electric furnace no doubt he could sell it. The low limit a few years ago would not be a low limit to-day, especially if the impurity is iron and not silicon. I have no authoritative information on that subject now.

*State Geologist of Pennsylvania, Beaver, Pa.

THE MANUFACTURE AND USE OF DIE-CASTINGS

By Charles Pack*

Die-castings may be defined as metal castings made by forcing molten metal, under pressure, into a metallic mold known as the die. From this definition it follows, that for the successful operation of the die-casting process three factors must be considered as of vital importance:

1. A machine or appliance capable of holding the molten metal and delivering it under pressure into the die.

2. A suitable metal for use as a die material capable of withstanding the continued erosive action of the molten metal, as well as the rapid temperature changes to which it is of necessity subjected in service.

3. A metal or suitable alloy to meet existing conditions in the machine and mold.

The die-casting process is best adapted to small intricate parts where the cost of machining is an important factor. Where a sand casting can be used with little or no machining the die casting will be of no practical value, since the main function of the die-casting process is to reduce the machining cost of metal parts.

HISTORY AND EVOLUTION

Although the die-casting process as an individual industry dates back to a period not exceeding twenty years, metal molds were used as early as the fifteenth century. Whether the metal mold was first used for making printing type or pewter tableware is not definitely known, but that it was used by Gutenberg in 1454 for making his type is well known, since printing would never have been successful if it had been dependent for type upon the clay or loam molds and the crude machines of that period.

Pewter tableware was very fashionable during that period, and even during the colonial period in this country. That metal molds were used in casting pewter tableware is proved by various manuscripts and prints that are in existence. Ornaments, cheap statuary, etc., were cast in metal molds during the seventeenth

*Chief Chemist and Metallurgist, Doehler Die-Casting Company, Brooklyn, N. Y.

Fig. 1. Type Casting About 1568.

century. Lead pipe was cast in iron molds as early as 1743. I have a number of slides demonstrating the early uses of the metallic mold. Fig. 1 is taken from an old print. It illustrates the method used by Gutenberg for casting his type. There is no doubt that a metal mold was used. Fig. 2 of the seventeenth century, gives a view of the type-casting process in use at that time. Here the furnace and method of operation are more clearly illustrated. Fig. 3, dated at the end of the eighteenth century, shows a view in an American type-casting foundry during the colonial period. Here the entire family is seen at work, and the metallic hand mold can also be seen. Fig. 4, taken from a print dated 1740, gives a diagrammatic view of a German type-foundry equipment. The different parts of the me-

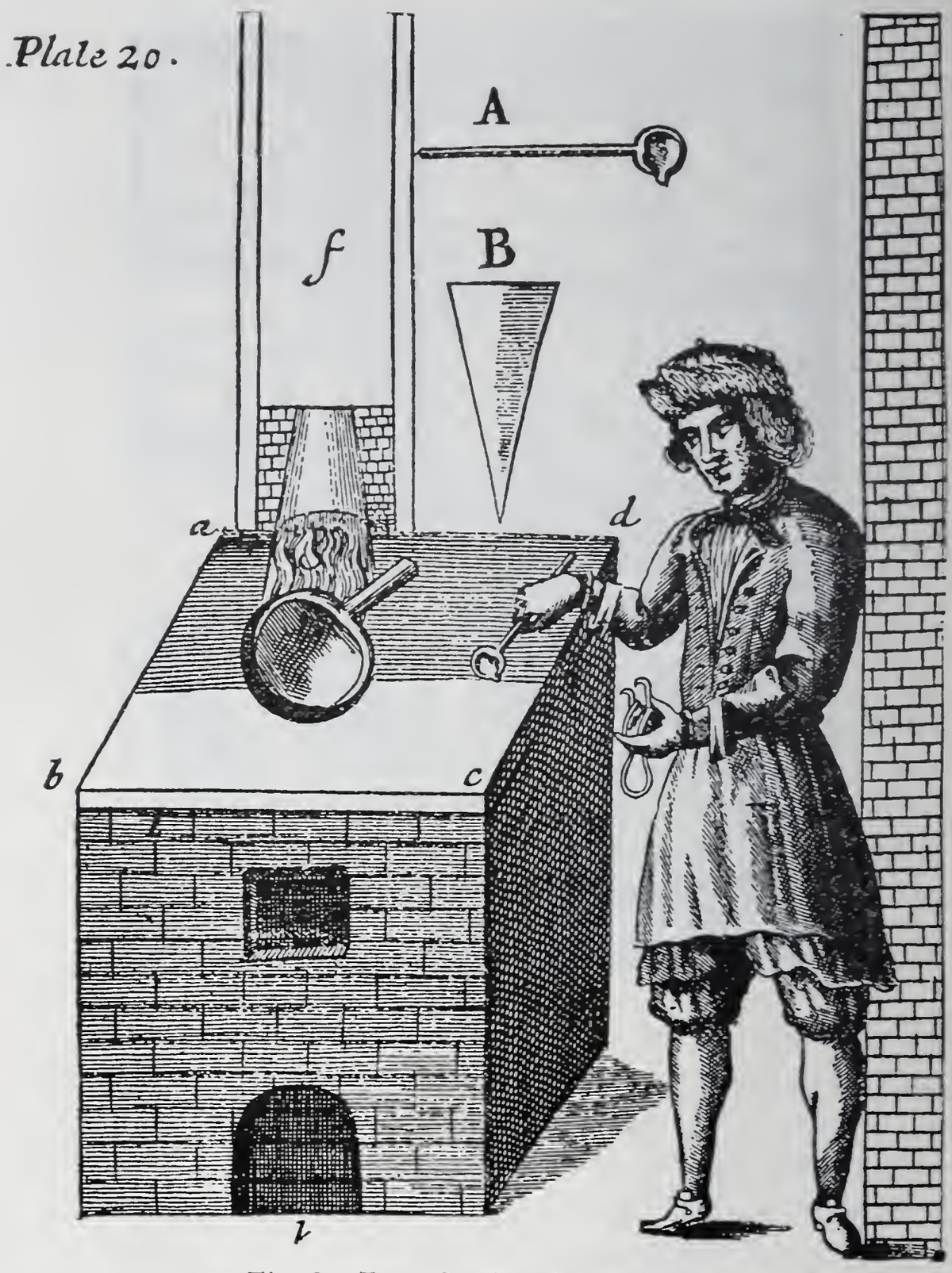

Fig. 2. Type Casting About 1683.

tallic molds are shown, as well as the furnace and tools used. Fig. 5, taken from a print dated 1755, shows a view in a shop where pewter tableware was cast. Some castings can be seen in the foreground and also the casting operation. Fig. 6 is dated 1743 and shows how lead pipe was cast in metallic molds before the extrusion process was developed.

Fig. 3. Type Casting in 1800.

Although the hand mold used during the eighteenth century for type casting was capable of producing about 5000 individual types per day when in the hands of an experienced worker, it was soon found that it was entirely too slow to keep pace with the rapid progress being made in the printing art. Work was begun on the automatic type-casting machine early in the nineteenth century. Church's type caster was an English invention of 1822. It was claimed to be capable of producing 75 000 types an hour by

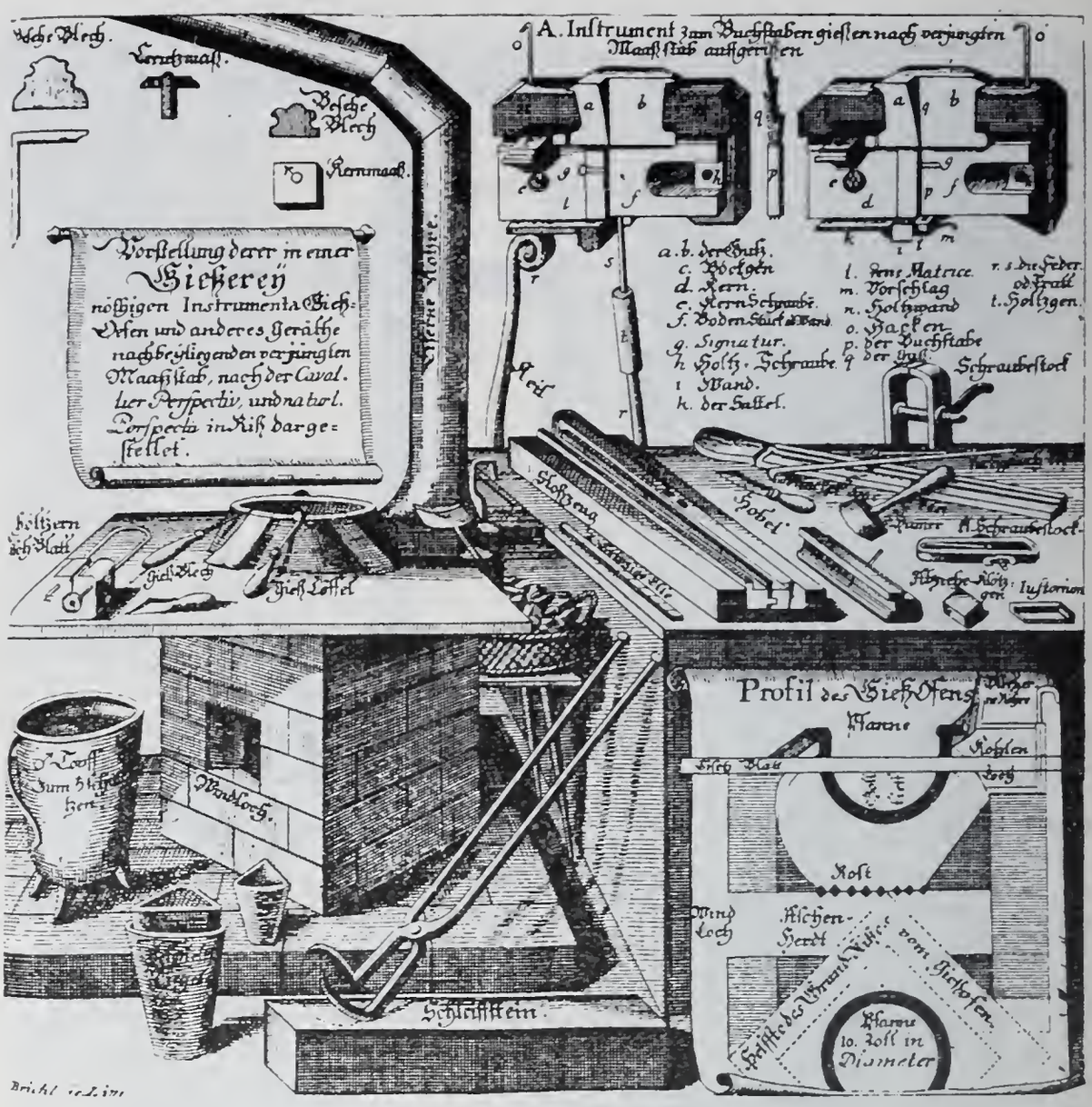

Fig. 4. Type Casting Utensils of 1740.

casting a whole font at each operation. Following this invention came many others too numerous to mention here, and finally, in 1886, the first linotype machine with independent matrices was set up in the composing room of the *New York Tribune*. Modifications of this machine are undoubtedly well known to you, but I will show a picture of it (Fig. 7) to demonstrate its relation to the subject of my paper. In this machine the metal is forced into a metallic mold formed by the assembly of the matrices. The type-metal is melted in an iron pot and is forced automatically by means of an immersed iron cylinder and piston into the mold, the sprue being cut and the casting ejected automatically. This principle was adopted in the construction of the die-casting machine and is used to-day in the most successful machines of this type.

Fig. 5. Pewter Casting About 1755.

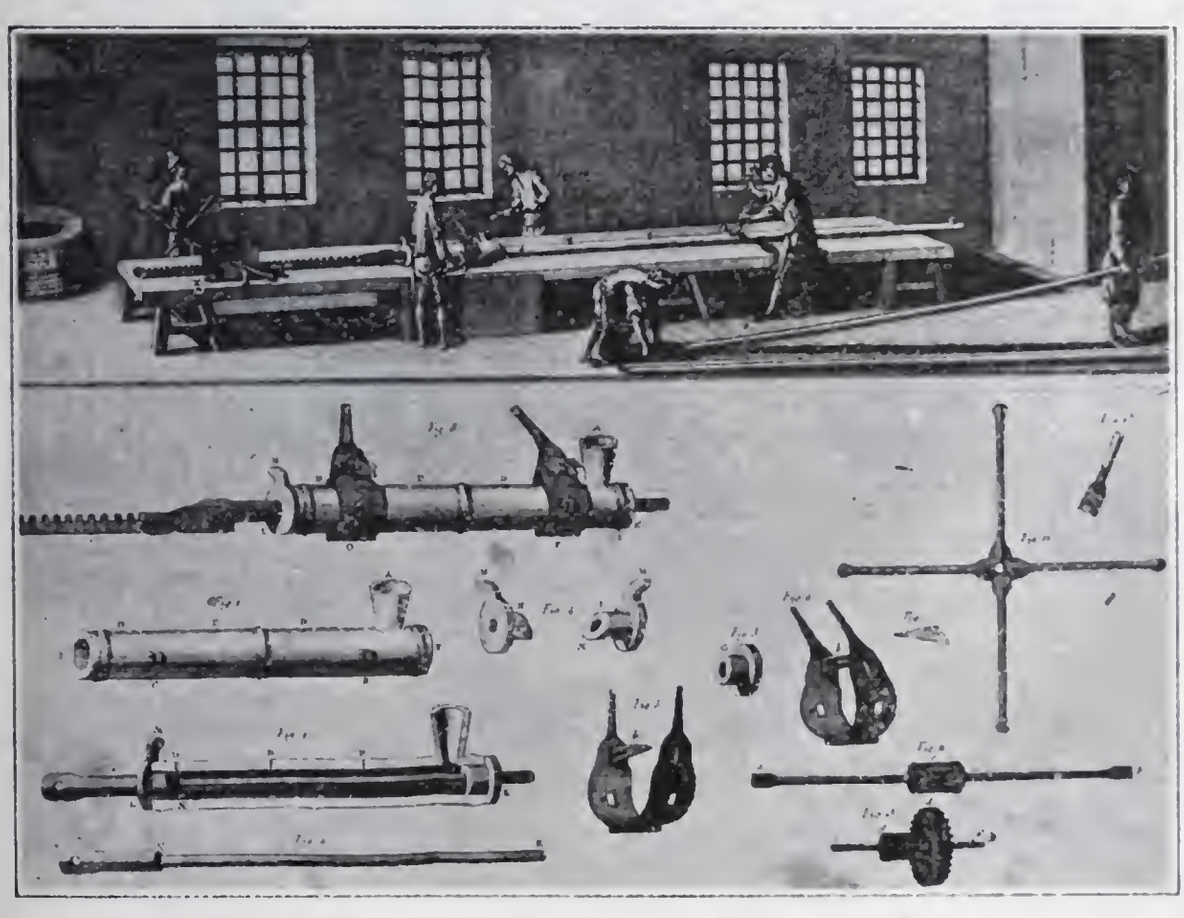

Fig. 6. Casting lead pipe in France—1743.

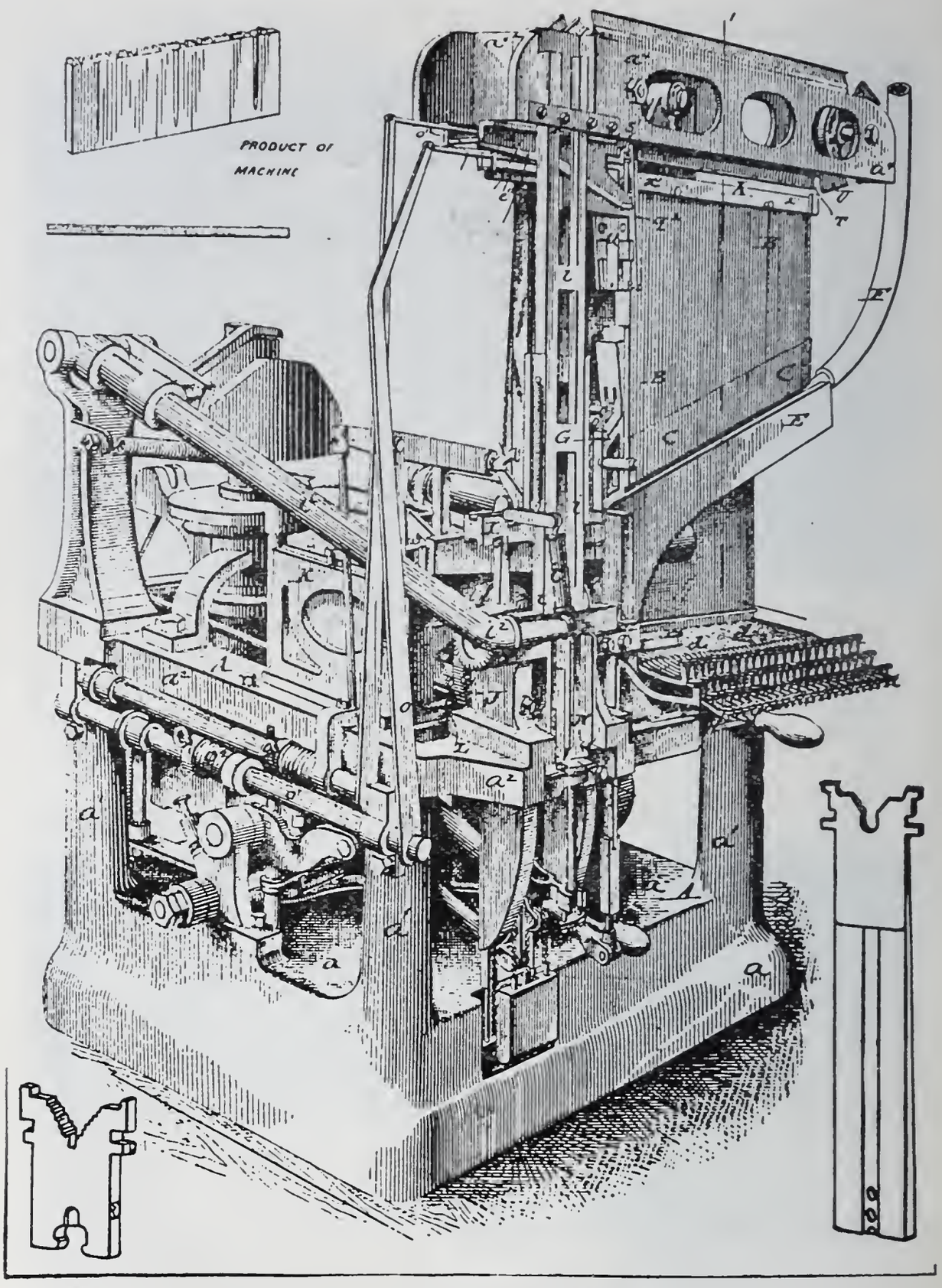

Fig. 7. First Linotype Machine—1866.

The introduction of babbitt metals for anti-friction bearings created a demand for a die-casting machine, particularly since the advantages of a chilled babbitt were clearly understood. Many machines were constructed during the latter part of the nineteenth century and were used in some of the automobile plants for cast-

ing engine bearings. The first company was formed to manufacture and sell die-castings from zinc, tin, and lead alloys at the beginning of the twentieth century in Syracuse, N. Y. The Doehler machine was patented in 1907. This machine was so successful that it was adopted by the largest companies in the country, including the Westinghouse Electric & Manufacturing Company, of this city, and the General Electric Company. The machine was also sold in England, Germany, Austria-Hungary, France and Canada, indicating that the die-casting process was distinctly an American development. A diagram of the Doehler machine as originally patented is shown in Fig. 8. In Fig. 9 the machine is shown set up ready for the casting operation.

In Fig. 10 is shown another type of die-casting machine that is used to a limited extent by some manufacturers. This machine is known as the air machine. It consists primarily of an air-tight melting-pot with an air inlet and metal outlet. Compressed air or steam is forced onto the surface of the metal, forcing it through the outlet into the die. The design of the air machine may be varied to a large extent, but the basic principle as outlined generally remains the same. Many attempts have been made to remove the air from the die prior to casting, and so-called vacuum machines have been devised. I have had occasion to experiment with this type of machine and also to compare the product of this machine with the product of the plunger die-casting machine, and

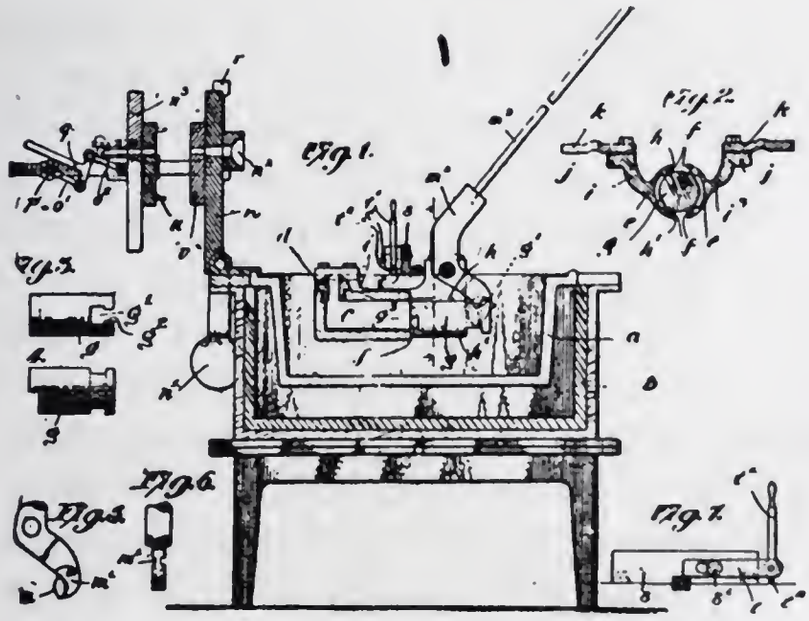

Fig. 8. Diagram of Die-Casting Machine.

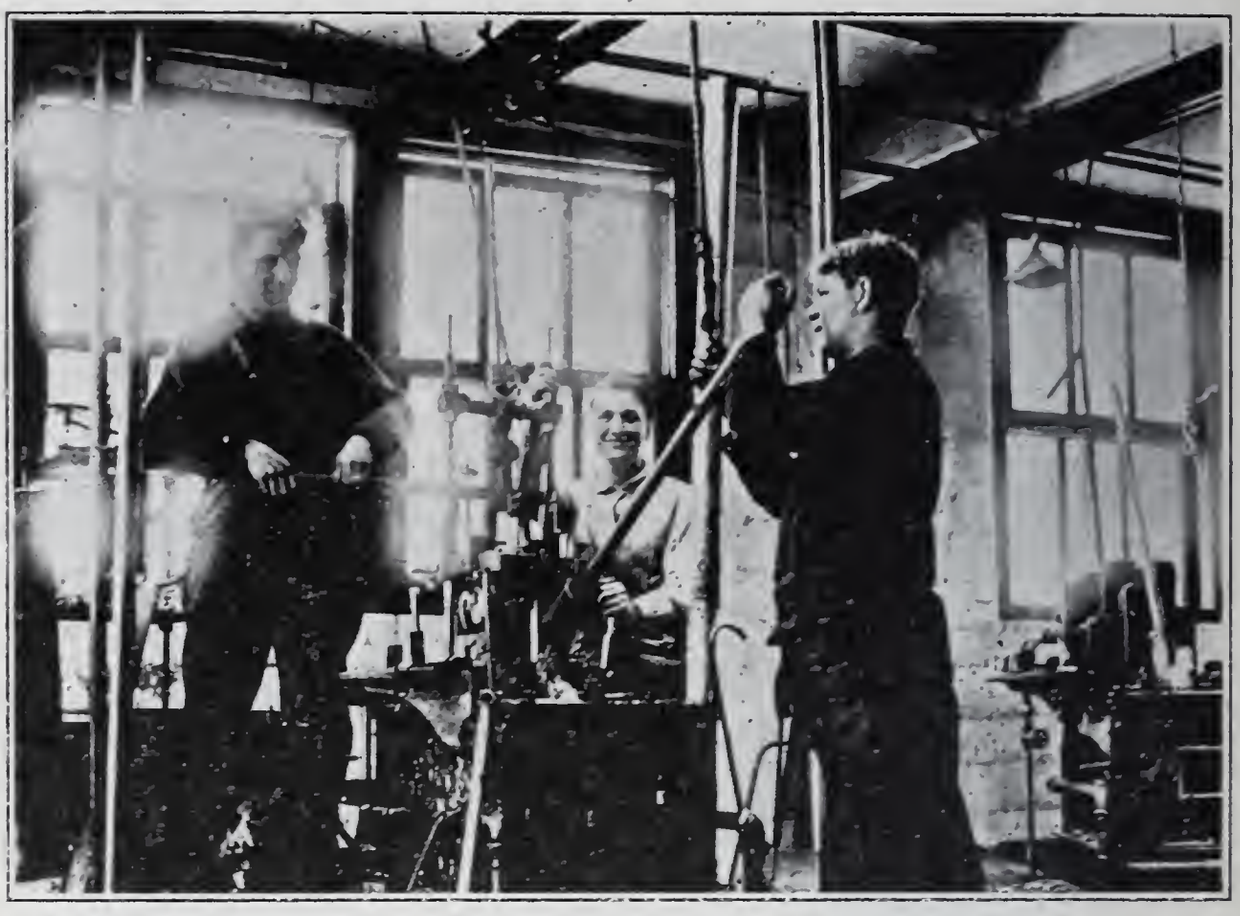

Fig. 9. Die-Casting Machine Set Up.

I am of the firm belief that no advantage is to be gained by the application of the vacuum principle to the die-casting machine either by itself or in combination with the air or plunger machine.

DIE CONSTRUCTION

The proper design of the die really constitutes the most important part of the successful die-casting process. The finest die-casting machine, combined with the most skillfully prepared alloys, will not produce satisfactory die-castings if the proper attention has not been given to the gating, venting and general construction in the original design of the die. No given rule can be laid down for the design of all dies, and satisfactory results can be obtained only by employing men carefully trained through long periods of observation and experience. I have here a die that will serve to demonstrate the fundamental principles of die construction. Only the highest type of skilled mechanic can be employed on the actual work of making these dies, since in many cases the parts to be produced from these dies must be held to

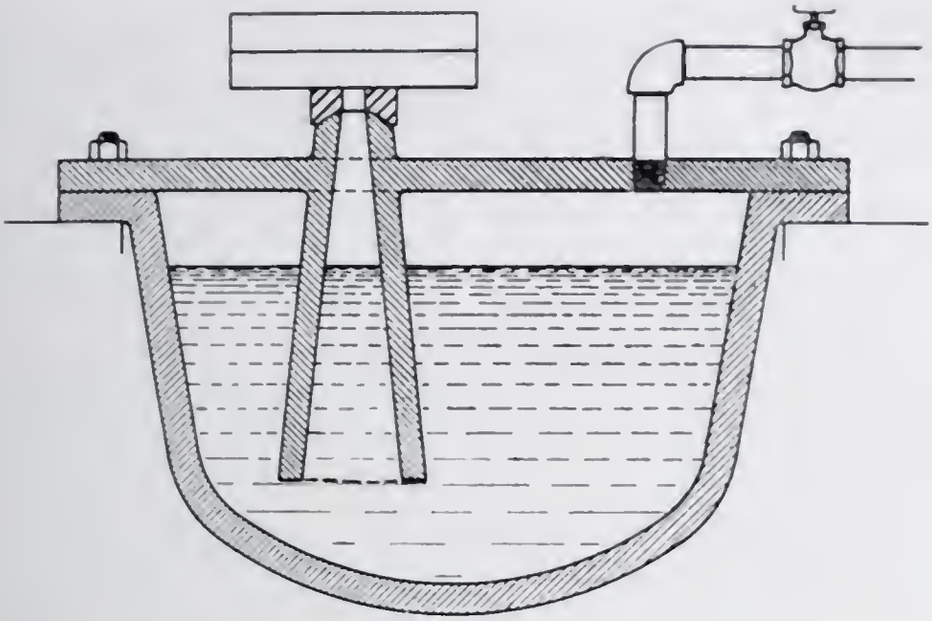

Fig. 10. Air Machine.

a tolerance of ± .001 inch. The employment of second-rate mechanics on this class of work is a false economy and may often prove a costly mistake. The actual labor cost on a die may vary from $100, for simple parts, to $1000 for more complicated parts, requiring from two weeks' to four months' time on the part of one or more skilled mechanics. With these facts in view, it can readily be understood how costly an error may prove, particularly when made in the final stage of the die construction.

APPLICATION IN ENGINEERING PRACTICE

It is evident from the foregoing that the use of die-cast parts cannot be considered an economical proposition where only small quantities of castings are required, since the initial die charge when pro-rated over the castings required may then wipe out any possible saving over the other methods of production. The minimum practical quantity depends largely upon the number and complexity of the machine operations that can be saved on the particular part in question. I have seen very few machine parts that could not be produced more cheaply by other methods of production where the quantity required was less than 1000. When quantities of 10 000 or more similar parts are required the die charge is readily absorbed and fades into insignificance.

The die-casting alloy should be given careful consideration by the engineer before deciding upon the use of a die-cast part.

The days have long since passed when a manufacturer could sell die-castings made from some mysterious, secret alloy unknown to the art. However, it must also be borne in mind that the analysis of the alloy is not always a true indication of the quality of the die-cast part, since the method of alloying and the care of the alloy during the process are of more importance in this industry than in foundry practice.

As stated before, the first die-castings were made from zinc, tin, and lead alloys due to their comparatively low fusing points. The physical properties of these alloys when compared with the alloys of aluminum, copper, and iron were so poor that die-casting manufacturers soon recognized the importance of developing a process of die-casting the higher fusing-point alloys. Experiments were made with brass die-casting machines as early as 1907, but it was not until 1914 that the Doehler aluminum die-casting process was developed sufficiently to take its place among the commercial methods of production. At various intervals before and since that time enthusiastic theorists have arisen with the shout "We have it," only to find that some small but important factor was overlooked. Advertisements in trade periodicals for the past ten years show that at regular intervals brass die-casting companies have sprung up like mushrooms and disappeared just as fast. I have here some samples of brass die-castings made in 1907, but, nevertheless, it is only during the past year that we have been able to produce finished brass castings on a limited, commercial, competitive basis, and then only by a radical departure from the methods used in 1907.

PROPERTIES OF ZINC-ALLOY DIE-CASTINGS

Prior to 1914, ninety per cent. of all die-castings produced were made from zinc-base alloys, of which the following is a typical analysis:

Zinc	84.5 per cent.
Tin	9.0 per cent.
Copper	4.5 per cent.
Aluminum	2.0 per cent.

The tin, copper, and aluminum contents of the alloys were varied to suit the particular manipulator.

Extravagant claims have been made for these zinc alloys, and even to-day they are advertised by some irresponsible manufacturers to have the strength of soft brass. Zinc alloys can be made to test 18 000 to 20 000 pounds tensile strength, but due to the treacherous crystalline nature of these alloys, I would not consider their use in vital machine parts where even one-half of this strength is actually required. To say that zinc-alloy die-castings are as strong as soft brass is absolutely false and misleading. Where a hard alloy is required for a part not subject to severe or sudden strains the zinc alloy will answer the purpose. Zinc-alloy die-castings are being used with satisfactory results for magneto housings, switch locks, switch handles, self-starting devices, oil-pump parts, speed indicators, wind-shield nuts, drinking-cup machines, gum and candy-vending machines, cigar and stamp-vending machines, check protectors, stamp-affixing machines, phonograph elbows and sound boxes, besides numerous other devices too numerous to mention. The poor physical properties of the zinc alloy may, to a large extent, be counteracted by redesigning the machine parts to meet the conditions. Ribs, webs and fillets may be added and iron, steel, or brass parts inserted where strength is required. I have a number of parts here showing the use of inserts in die-castings. Zinc-alloy die-castings may be plated with nickel, brass, silver, or gold. Zinc alloys of the type given are corroded by water and aqueous solutions of any kind. Acids and alkalis attack these alloys readily and their use in food containers should be prohibited. Zinc-alloy die-castings may be buffed to a high luster, but tarnish rapidly upon exposure.

The highest possible melting-point of the zinc-group alloys is 750 degrees F. Alloys of the type given will begin to fuse at 350 degrees F., and will be liquid at 780 degrees. It is not advisable, therefore, to use zinc alloys where abnormal temperature conditions are likely to exist.

PROPERTIES OF TIN-ALLOY DIE-CASTINGS

Tin-alloy die-castings may be used for food-container parts, hygienic and surgical instruments, milking machines and dairy

utensils, and for other machine parts where non-corrosive properties are desired and strength is of minor importance. These alloys are comparatively soft and have a maximum fusing-point of 425 degrees F. The most important use of tin-alloy die-castings is in the production of babbitt bearings for internal-combustion engines.

Babbitt metal as originally patented by Isaac Babbitt consisted of tin, copper and antimony, with the first-named element in preponderance. Babbitt's formula has been varied to a large extent to suit different engineers. Some so-called babbitts on the market to-day contain no antimony; some contain varying proportions of zinc; many contain lead; while others contain little or no tin. Genuine babbitt metal, however, as understood by engineers consists of tin alloyed with copper and antimony. Zinc and lead are regarded as objectionable impurities. I have here some die-cast babbitt bearings.

The hardness of babbitt metal may be varied within certain limits. Generally the harder metal will also have a greater compressive strength, which is greatly to be desired in motor bearings. Unfortunately, any increase in hardness is usually accompanied by a reduction in elongation or increase in brittleness. To overcome these drawbacks the babbitt-lined, bronze-back bearing has been devised and is now used exclusively in the manufacture of the highest grades of internal-combustion engines for use in automobiles, motor boats and aeroplanes. The bronze-back bearing is used for connecting-rod and main-shaft bearings on all aeroplane motors made in this country.

PROPERTIES OF LEAD-ALLOY DIE-CASTINGS

These alloys consist of lead alloyed with varying proportions of antimony and tin. These alloys are so well known to the art that very little need be said here beyond the statement that an alloy made from any practicable combination of these three elements is suitable for die-casting. The maximum melting-point of any lead-base alloy is 620 degrees F.

Lead-alloy die-castings are used where a cheap non-corrosive alloy is required and where strength is of minor importance. Lead-alloy die-castings are used extensively in fire-extinguishers,

fuse-hole plugs on shrapnel shells, fuse-timing devices, hand grenades, rifle grenades, shell parts, etc.

PROPERTIES OF ALUMINUM-ALLOY DIE-CASTINGS

The alloys used in the Doehler aluminum process are of the aluminum-copper type and contain no zinc, tin, lead or other low-fusing elements. The process and alloys are covered by patents, which are now being litigated in the courts.

The melting-point of these alloys is approximately 1200 degrees F. and the tensile strength 25 000 pounds per square inch. Alloys of this type have been used in automobile construction for the past twenty-five years, and need no introduction here. The hardness may be varied by either increasing or decreasing the copper content. The alloy takes a high polish under the buff and retains it well under atmospheric conditions. It resists the action of weak organic acids and weak nitric acid, but is rapidly corroded by salt water, hydrochloric acid, sulphuric acid and alkalis.

Aluminum die-castings are superior to zinc die-castings for the following reasons:

1. Freedom from the crystalline structure that characterizes the zinc castings. The aluminum die-castings are therefore more permanent and reliable.

2. Greater strength of the aluminum alloy.

3. Lower specific gravity.

4. Higher melting-point and greater resistance to varying temperature conditions.

5. Greater elongation.

During the past two years the Doehler aluminum process has been developed to such a high degree of efficiency that it is possible to die-cast in aluminum any part that is now being die-cast in zinc. The abnormal cost of aluminum at the present time, coupled with the fact that the zinc die-casting process is older and better understood, makes the aluminum die-casting somewhat more expensive than the zinc die-casting. The higher cost of the aluminum die-casting prevents its entirely displacing the zinc die-casting where the latter is being used to-day.

The difficulties heretofore experienced in soldering and plating aluminum have been overcome to a large extent, and aluminum die-castings are being nickel, gold, and silver plated very successfully to-day.

BRASS AND BRONZE DIE-CASTINGS

The die-casting of brass and bronze has been for many years the fond ambition of all die-casting manufacturers. Processes have been devised which produced very promising samples, but they were invariably failures when tried on a commercial basis.

During the past year we have been able to develop the die-casting of brass on a commercial basis. Past experience has taught us to proceed slowly and cautiously, but we are to-day producing at the rate of approximately 1000 pounds of brass per day, and feel justified in saying that the brass die-casting is now an established commercial product. Brass die-castings are now being produced for use in submersible bombs, naval torpedoes, starting and lighting systems, cream separators, turbine engines, wind-shield fixtures, railroad steam couplings, carbureter parts, retainers for ball and roller bearings, gas-meter parts, water-meter parts, etc. These castings are being marketed under the trade name of "Do-Di" castings, and patents for the process are now pending in the patent office.

We have for the present limited ourselves to the use of the copper-zinc type of brasses, which include the so-called manganese bronzes. The process is not limited to this group of alloys, but it was thought advisable to concentrate on one type of alloy for the present. The copper-zinc alloys have been thoroughly described in metallurgical treatises, and I do not believe it necessary to give their properties in detail in this paper.

CONCLUSION

Although the die-casting industry has made rapid strides during the past five years, and has become recognized as one of the most important branches of the non-ferrous metal industry, it is safe to predict that it is still in its infancy. The improvements that may be expected in the aluminum die-casting process

in the future make it reasonably certain that the aluminum sand-casting process will be used only for exceedingly large parts. Experiments have been made with iron die-castings, but the die-casting of aluminum, brass and bronze presents enough problems to keep the chemical and mechanical engineers engaged in this industry busy for some time to come.

DISCUSSION

Mr. Jesse L. Jones:* I think Mr. Pack is slightly in error in regard to his statement that zinc-base die-casting metal may not be as strong as soft brass. The alloy known as lumen-bronze, which consists of 85 per cent. zinc, 10 per cent. copper and 5 per cent. aluminum, may have a tensile strength as high as 40 000 or 50 000, which is much in excess of the strength of cast brass. However, it has practically no ductility, and for uses where ductility is important it is of no value.

Mr. Pack referred also to lead-base die-castings. A type of lead-base die-casting alloy that has been brought out by Dr. F. C. Frary, of the University of Minnesota, is of considerable interest. This alloy is hardened with calcium and barium and has one very peculiar characteristic. It is harder after a week or so than it is when cast. A hardness of 27 or 28 points Brinell is claimed for the alloy, but what I have tested reached only 23 or 24. The hardness was 18 when cast. I have seen no explanation of this change. It is supposed to be a desirable characteristic, as you can line a bearing, have it seated on a shaft while it is soft and then obtain the increased hardness, which is due to the change that occurs in the alloy and which presumably would make the bearing more durable. One difficulty with this alloy is that the calcium or barium oxidizes very rapidly at a temperature of 700 degrees F. and above. When this oxidation occurs the molten metal has a peculiar surface appearance resembling that of mercury. Owing to this oxidation defect, it is impossible to cast this alloy in the ordinary manner and it has to be die-cast. I understand one of the motor companies is using this alloy in large quantities.

*Engineer, Research Division, Engineering Department, Westinghouse Electric & Manufacturing Company, East Pittsburgh, Pa.

PROF. GEORGE H. FOLLOWS:* For a good many years I have known what die-castings are, but it was only during this last summer that I learned what an undiluted blessing they are to humanity. Then I had occasion to take off my hat to the die-casting, and to bless the man who invented them, or rather the man who perfected them. It happened on a little out-of-the-way lake in northern Ontario where I have a summer cottage and, among other things, a motor boat *de luxe*. After negotiating about 5000 miles in four summers the connecting-rod bearing blew out. The babbitt had worn through to the bronze backing, and without any kind of warning the rest happened. I soon dismantled the engine and took the parts to the nearest saw-mill—15 miles away by water—and found a man who said he could make a good job of the rebabbitting. Well, he did his best, but it was all to no purpose, so then and there I mailed an order for the bearing parts to the Ferro agent in Toronto. My letter fell into the hands of a man with a heart, and he mailed me the pieces on the same day. So by the next mail boat I received a little canvas bag containing those two beautiful little die-castings, all ready to be fitted into the connecting-rod end. Two days later—two days of patient work, most of the time standing on my head in perfect good humor—and that engine was running as well as ever. In other words, our lives were saved! When I saw those little die-castings as I took them out of the canvas bag I felt like genuflecting, and thanked my stars that I live in this age of real manufacturing—the age of "interchangeable parts."

Mr. Pack's paper on "The Manufacture and Use of Die-Castings" is both interesting and instructive, but I think you will agree that we are ready for more and more definite information for the use of the designer and manufacturer.

The die-casting has been correctly classified as embodying a manufacturing process: The "casting die," the "drilling jig," the "milling fixture" belong together in a general way as means of economically obtaining interchangeability of parts. And yet there is a difference—a vital difference—and more than one.

A drilling or any other type of "jig"—using that term in its general sense—may be of several "grades." In other words, there

*Professor, Machine Design, Carnegie Institute of Technology, Pittsburgh, Pa.

are jigs and jigs, and, dependent upon the probable sales and manufacturing requirements, the jig will be anything from a very inexpensive to a very expensive piece of manufacturing apparatus; whereas a casting die, as I take it, is a casting die and must cost so much, willy-nilly. Another difference is that it is possible to make considerable change in the part to be "jigged" and still use the same jig; whereas a change in the design of a die-casting must involve either an entirely new die or expensive changes in the old one.

Mr. Pack has pointed out the great importance of correct die construction. This suggests that the "die construction" and the "casting design" must be co-ordinated. But only the very large shops have their own die constructors to call in consultation. What must the lone designer do? Must he trust to luck and blunder through, or can the Doehler Company give the necessary advice? Now that die-castings can be had in so great a variety of alloys—lead, tin, zinc, aluminum, brass and bronze—the choice of material becomes bewildering unless definite data are available for the help of the designer. The average designer of machines is not yet keenly alive to what the die-casting is able to do for him. May we not look for a book of data from the Doehler Company such as will help the designer to adjust his original designs to the requirements of the die-casting and die construction? I think I am right in saying that quite frequently the present practice is to design a machine and all its parts, and then later to discover that certain parts can be manufactured as die-castings. The drawings or sample pieces are sent, say, to the Doehler Company, and they make the dies and also the castings. In these days, when the processes to be employed in manufacturing have such a direct bearing on the design, it is of paramount importance that the designer be fully informed.

In offering these suggestions I feel very keenly that I am speaking largely from ignorance and from a single experience. Here is the experience: A manufacturer decided that certain parts of a new machine that was soon to be put on the market should be die-castings, and these parts were obtained in quantities. It was later found that many of these parts must be changed to

make the machine operate successfully. The die-castings and the dies had to be scrapped. This was an expensive mistake.

From the standpoint of the designer, therefore, it is perhaps good advice to say: Get fully posted on die-castings; design for die-castings; but do not order the casting dies and die-castings until you are absolutely sure that the design is correct. If, with this advice, I could hand to the designer a book of reliable and up-to-date information on die-castings, I should feel easy in my mind. Is there such a book at this time?

Mr. Pack: In writing this paper the time allowed was 45 minutes to one hour, whereas I can take one particular phase of the subject and spend eight or ten hours discussing it. It would take a week to thoroughly discuss the aluminum process alone and give you a fair understanding of it. We have mechanical engineers who have been in our employ five years and over and they are just about beginning to know their business. It is rather hard in three-quarters of an hour to cover all points, but I do appreciate the talk of the previous speaker in bringing out some of the important points I really overlooked. One of the important points brought out is the question of inserts. Inserts must be so formed that the part that is inside the casting can neither come out or be turned out. Usually either a hexagon or square shape will prevent it from turning and a groove will prevent it from coming out.

Mr. Jones made the point that zinc alloys, or some of them, have the strength of brass—a tensile strength of 25 000 or 30 000 pounds per square inch. The fact that you can make an alloy and put it into a test bar and pull it 25 000 or 30 000 pounds does not give the same die-casting manufacturer license to advertise the strength of his alloys as such. There are a number of reasons. For instance, take this part (showing). Assuming that it had been made from a certain alloy, who can say at any time just what particular strains are set up in the actual casting operation? You have a permanent core here and the material cannot compress the core as it does with sand casting. Just what the effect of the core is on that casting no one can tell. The man who advertises the strength of such an alloy as 35 000 pounds knows that it is not nearly that, and he should not so advertise it.

There is another point that I omitted. The general impression of the man who is not familiar with die-castings is that, when you take a pot of molten metal and force it into the die, the metal will be denser and have a closer fracture than a metal which is poured by gravity. That is a mistake. As a general rule, die-castings have a porous structure and are not as solid as sand castings. The difference is that when castings are put into a mold made of sand the metal has a chance to flow together and the air will leave the mold through the ports of the mold itself. In the die-casting process the metal goes into the mold in a fraction of a second and it is almost impossible to devise a die, and so vent and gate it that the air in all these pockets will travel out in the proper way. At any rate, it has never been done.

I have here an article on die-castings in which the author claims to have eliminated blow-holes by creating a vacuum inside the die. His theory is that if you take the air out of a die you will have no air left to put in the casting. But he does not tell us that as far as the actual value of the casting is concerned a vacuum is no more desirable than an air-hole inside the casting. You have no metal there in either case. The presence of blow-holes in die-castings is not due so much to the fact that there is air present in the die as the fact that the metal will splash and chill on the outer surface of the die, preventing the metal from feeding to the center afterwards. Whether you have air inside or vacuum inside does not make much difference. The vacuum process has been tried and discarded. We must admit that blow-holes are a factor to be considered in die-castings, but bear in mind that it is possible by special attention to a certain part to get your gates and vents so perfected that a solid casting can be produced. This has been done with motor bearings, where it is important that you get solid bearings. That is why solidity is claimed for certain castings and not claimed for others. So aside from the factor of possible casting strains the question of blow-holes comes in, and no man can predict just where those blow-holes will be. It is for that reason that I made the point in my paper that it is misleading to assume that zinc die-castings are anywhere near as strong as brass.

As to the strength of material, how can a mechanical engineer engaged in the design of some particular device know what to use and how to make his die-casting? I have never known a case where a part has been made of brass or iron where it can be made in the same way in white metal, nor do I believe that it is possible for any mechanical engineer from mere data or books to sit down and make the best job of designing a die-casting. No engineer can be expert in every line. The man who specializes in foundry work knows more about it than one who has simply read about it or had it in school. The object of a talk of this kind is to give you a working familiarity with the subject so that you know what die-castings are and have an idea of what can be done with them. But if you are to be called upon to use this information my advice would be to go to a reliable concern and get the advice of their men. I do not believe there is a company that produces any standard article that does not have a respect for its reputation, and no reliable concern will advise you to use a product that they do not think would be suitable for your purpose.

Prior to 1914 three alloys were used—zinc, tin and lead. These three alloys are comparatively new. When we come to aluminum and brass we enter a well-known field. Aluminum alloys of the type here shown have been used by every automobile concern in the country. From analysis of brasses you can determine just what you are going to get. With the old type of alloys (zinc-base) the general term used was that they were as strong as cast-iron. The die-casting industry has suffered to a large extent from over-enthusiasm. The average inventor in this country will sit down two or three months and devise a working mechanism. Having devised that mechanism he will put it on the market if he has money enough. If he has not, he will make a working model and try to get capital to back his invention. Having secured capital he will then consider how to put the thing on the market. Sometimes he will find that practical machining of the pieces is impossible, or the cost is such as to make it commercially impracticable. The next thing he turns to is die-casting, and it is the hardest thing on earth to tell a man of that kind that the metal is not adopted to his purpose. He will insist on using that alloy because it is his only hope. If one company

turns it down he will finally get another company to make it, only to find that it will not stand up in service. That has been true of die-castings; but the die-casting industry today is reaching the stage where aluminum is replacing zinc.

I may say in regard to issuing a book, that a very elaborate work has been published by our company, and if the Secretary will give me the names of some of the men who would like a copy I shall be glad to send it to them. It covers practically what I have said here. It does not give any very elaborate details on zinc castings, because the zinc casting is practically doomed.

Another important point brought up by the previous speaker is the question of changes. In ordering die-castings be sure you are right and then go ahead, but do not go ahead until you are sure you *are* right. We should not be too anxious to adopt something new and tests should first be made. My advice has always been this: Where you use brass, if there is any doubt as to the advisability of using a die-casting, have some of the die-casting alloy cast in sand and machine it to the required shape. The aluminum die-casting may be somewhat stronger than the sand casting, but it is safe to assume that the strength will be approximately the same.

The question of changing is not as serious as you may imagine. For example, if the change required were a different pitch in gear teeth the old die would be practically useless, as it would hardly be possible to make such a change on any die. But if you want to change the center of the casting it is easy to bore it out larger. Or if you wish to add a number of pieces it is easy. The difficulty arises when you want to reduce the size or put some depression in your casting. Even that is possible, however, because most dies are made in quite a number of pieces, and you can take out one piece and put another in its place. There are very few instances where it is necessary to discard an entire die. Usually a change is possible, but it may take several days, and the present pay of tool-makers emphasizes the desirability of avoiding mistakes. Before ordering your die be sure your design is correct.

Mr. F. L. Egan:* I have had some experience with die-castings and wish to present it, not in criticism of die-castings, but rather in support of Mr. Pack's contention that engineers should be very careful that the design and alloy (or the physical and chemical properties) are adapted to the service proposed.

A friend of mine, who is a doctor with a large practice scattered over a considerable area, had a four-cylinder roadster, which was a particularly well-made, high-grade car. He had a habit of remarking that it was the best car ever built. He ran it about 50 000 miles and then purchased a new and improved six of the same make, which he thought was even better than the old one. In less than sixty days the car commenced to give trouble at three different points. Two months after he purchased the car he had a bill of $50 for one part, due to a defective starter case, and in a short time the gears went bad. The next thing to give trouble was a little gear case, with six or eight machine screws tapped into it, and the metal was unable to hold the screws against the vibration.

These three parts were all die-castings, and after the first two months' service, repair bills averaged about $20 per month. He then ordered eight pairs of gears at one time, stating that he had to keep it going; but he had to use his old roadster the greater part of the time. He appealed to me for advice, and I decided to return to first principles, and at an expense of between $60 and $70 made patterns and cast two of the parts of Government bronze, using through bolts instead of tap bolts wherever possible; also designed the cases a little heavier. We then made a pair of distributor gears of tool-steel and, as they usually run without oil, we hardened and ground them by running them mounted in their case, flooded with oil and carborundum dust.

The car has been in continuous service since these changes were made fourteen months ago, but the doctor insists that the little die-castings made a total failure of what was otherwise an unusually good car. He also stated that he would not purchase another car without a guarantee to replace with castings of bronze any die-castings which gave trouble.

*Carnegie Steel Company, Pittsburgh, Pa.

MR. PACK: The time has passed when you can talk of die-castings just as die-castings. I should like to know the composition of that die-casting that Mr. Egan mentioned. Was it zinc or aluminum or brass?

MR. F. L. EGAN: I judge it is a zinc alloy. This was two years ago, and the motor company is still using die-castings in these parts. Although the alloy and the design may have been changed, externally they appear the same. I have a number of the gears in my possession now, and they make good paper weights.

MR. PACK: I want to prove that it was not the die-casting, but the mechanical engineer, that was at fault in the designing of that car. It was not a Westinghouse starter I venture to say. The Westinghouse starter has half a dozen of our castings, and I have here the distributor gear used in the Westinghouse starter, and that does not fail in service. The man who uses a distributor gear made from a zinc alloy does not know his business.

The die-casting process affords an opportunity to certain automobile manufacturers who are willing to go to any extreme in order to produce something more cheaply than their competitors.

Die-cast zinc gears can be used for many kinds of work, but I would not permit my company to make a distributor gear for a starting system from a zinc alloy. My company produces such gears for some 10 makes of starters and in all cases a *brass* die-casting is used.

Aluminum die-cast gears are being used for spark and throttle control sets and they have been found entirely satisfactory. It is safe to say that at least 75 per cent. of the cars made in this country are equipped with such gears.

The use of a die-cast aluminum transmission gear merely indicates the inefficiency and lack of judgment of the designer, and cannot be offered as an argument against the use of aluminum die-castings in general. It might similarly be argued that the use of Monel metal in engineering practice is not to be sanctioned, simply because the alloy had fallen down in service due to certain cases of misapplication.

An instance of the failure of some manganese-bronze castings in the Catskill Aqueduct is well known, but that is not sufficient reason for abandoning the use of this most useful alloy in engineering.

Following this line of reasoning, we must conclude that failures such as pointed out by Mr. Egan must be used not as an argument against the use of die-castings, but against their indiscriminate use by men whose chief aim is to cut production costs, and who in most instances have little or no knowledge of the nature of the material with which they are dealing.

Mr. F. L. Egan: My friend is a doctor, not an engineer. He purchased what he had every reason to believe was a better car than his old one, and it proved a failure, due to these three little details. All he knows about die-castings is that his car failed due to their use. I would not hesitate to use die-castings in some places, but would first determine whether the alloy and the design were suited to the purpose intended. There have been many failures of die-cast gears, and I have yet to see a die-cast gear give the service of a well-cut gear of suitable material. In one case we replaced die-cast gears, driving an oiler on a four-cylinder car, with a well-cut, mild-steel and phosphor-bronze pair, at a reduction in cost, counting free replacements and considering a year's production of 9000 cars.

The Engineers' Society

of

Western Pennsylvania

INCORPORATED 1880

ABSTRACT OF MINUTES

Volume 33

FEBRUARY 1917—JANUARY 1918

ANNUAL MEETING

The Thirty-seventh Annual Meeting of the Engineers' Society of Western Pennsylvania was held in the Society Rooms, Oliver Building, Pittsburgh, Tuesday, January 16, 1917, at 8:25 P. M., President Samuel E. Duff presiding, 75 members and visitors being present.

The minutes of the last annual meeting, held January 18, 1916, were read and approved.

The annual report of the Board of Direction, which included the reports of the Standing and Special Committees, the Sections and the Treasurer, was read as follows:

REPORT OF BOARD OF DIRECTION

The Board of Direction of the Society held 11 regular monthly meetings, ond three special meetings during the past year, at which routine business of the Society was transacted.

During the year there were held nine regular monthly meetings, eight special meetings and the annual meeting of the Society. Total attendance was 6072, the average being 337. The maximum attendance was 1512, the minimum 42, and the average number participating in the discussion of papers was eight. Five of the special meetings were devoted to a series of lectures on Military Engineering.

At the close of the year the membership of the Society was as follows:

Honorary Members	3
Members	929
Associate Members	31
Associates	30
Juniors	96
Student Juniors	25
Total	1126

REPORT OF HOUSE COMMITTEE

To the Board of Direction,

Engineers' Society of Western Pennsylvania:

The House Committee has concerned itself almost exclusively with the question of securing new rooms for the Society. Last Summer the agent of the Oliver Estate intimated that the Society's lease on the present quarters might not be renewed; later he said that there was a possibility of our

being allowed to remain. The Committee, therefore, devoted considerable time to the consideration of various possible locations, but has as yet been unable to secure anything satisfactory.

It seemed very desirable to secure rooms close to the business center of the city, and also there seemed to be need of a larger auditorium and an additional office room. There are very few buildings affording rooms that could be considered at all attractive, and where these are obtainable the price is usually prohibitive. Consequently, the problem has been a perplexing one. It was only within the last ten days that we were definitely notified that it would be positively necessary to move.

At present negotiations are under way which seem to offer the possibility of a very satisfactory solution, but no definite announcement can be made at this time.

Respectfully submitted,

FREDERIC CRABTREE, *Chairman.*

REPORT OF PUBLICATION COMMITTEE

To the Board of Direction,
Engineers' Society of Western Pennsylvania:

During the past year three meetings of the Publication Committee have been held, but the attendance of these meetings has not been as full as is desirable, an average of seven out of twelve members having been present. The Committee recommended to the Board that the program of meetings be somewhat curtailed and that only four meetings of each Section be held during the year instead of five. The number of regular monthly meetings for the presentation of papers has been made nine instead of ten, and the June meeting will be of a social nature, under the direction of the Entertainment Committee.

In selecting topics for the papers of the year, the main thought was to find subjects which would appeal most directly to our membership—papers relating especially to the activities characteristic of the Pittsburgh district.

Further, it was considered desirable at the first meeting of the Committee that as many of the authors as possible be local men, and members of the Society. Under the conditions obtaining in the business world during recent months, it has been increasingly difficult to persuade our members to prepare papers and, as a consequence, it has often been necessary to secure speakers from outside the district. A committee of even twelve members cannot be in touch with all the varied interests of the membership of our Society, and it seems desirable to repeat the suggestion of the Chairman of last year's Committee, to the effect that more members should send in to the Secretary or to the Chairman suggestions as to titles and authors of papers.

It has been suggested that the year's program should include more papers of a general nature. In the event that such a change be thought desirable, our Proceedings would be robbed of much of their present value, though the cost of publication would be materially reduced.

During the past year one paper which was not presented at a meeting was published, and the Proceedings might properly contain more such matter. Could not our members often prepare short, pithy papers which might not be appropriate for an evening's meeting, but which, if published, would add materially to the value of our Proceedings?

Respectfully submitted,

WILLIAM E. MOTT, *Chairman.*

REPORT OF ENTERTAINMENT COMMITTEE

To the Board of Direction,
Engineers' Society of Western Pennsylvania:

During the past year your Committee arranged the following Inspection Trips and Entertainments:

Inspection Trips

February 5: To New Grant Central Office of the Central District Telephone Company; attendance, 85.

October 21: To American Zinc & Chemical Company plant at Langeloth, Pa.; attendance, 140.

Smokers

February 25: Smoker tendered to members of the Engineers' Society of Western Pennsylvania by the Director and Faculty of the School of Applied Science of Carnegie Institute of Technology; attendance, 175.

June 30: Vaudeville and Smoker tendered American Society of Civil Engineers by Engineers' Society of Western Pennsylvania at the William Penn Hotel; attendance, 435.

Receptions

February 14: The Banquet at Memorial Hall; attendance, 690.

December 11: The Banquet held at the William Penn Hotel; attendance, 890.

Respectfully submitted,

GEORGE H. NEILSON, *Chairman.*

REPORT OF FINANCE COMMITTEE

To the Board of Direction,
Engineers' Society of Western Pennsylvania:

The Finance Committee's work during the past year has been principally that of auditing the Secretary's monthly financial statement.

The Treasurer's report shows that the Society's financial condition is good. If from the total receipts of $22 971.21 we deduct $780.00 on account of entrance fees, we have left $22 191.21, or $197.18 in excess of the total expenditures.

During the past year a reserve fund of $2500 was authorized by vote of the Society to be formed by transfers from the permanent fund until the authorized total was reached. The object of this fund is to provide a means of caring for the variations which occur from month to month in the receipts and expenditures.

The figures quoted above from the Treasurer's report show that the total receipts for the year exceeded the expenditures for the same period. There are, however, during the year periods when the expenditures run ahead of receipts, and these periods may cover two or three months. Without such a reserve fund it is necessary to borrow money for current expenses or use money from the permanent fund in a manner not authorized by the By-Laws.

We believe that the establishment of this fund has been a very good thing and will materially assist the Secretary in his work.

Respectfully submitted,

ALEX. L. HOERR, *Chairman.*

REPORT OF MEMBERSHIP COMMITTEE

To the Board of Direction,
Engineers' Society of Western Pennsylvania:

During the past year we added 99 new members to the Society. During that same period 102 members have been lost by resignation, death and being dropped on account of non-payment of dues, as follows:

By resignation	42
By death	12
By non-payment of dues	48
Total	102

Last Spring we made an effort to secure members by a series of letters issued to a mailing list of technical graduates in this vicinity. It was hoped that this series of letters would give us an opening that could be used later on in personal interviews to secure members. This campaign, however, did not yield satisfactory results.

This Fall a special effort was made to secure the executives and leading engineers in the various companies in this vicinity. Owing to the loss of die and the Christmas rush, this campaign has just been started.

Respectfully submitted,

H. D. JAMES, *Chairman.*

REPORT OF COMMITTEE ON ONE HUNDRED FOOT STANDARD

To the Board of Direction,
Engineers' Society of Western Pennsylvania:

Your Committee on One Hundred Foot Standard would report that the room in the basement of the new City-County Building has been partitioned and set apart for our use.

The Jones & Laughlin Steel Company has kindly donated the two bars necessary for our standard. The Committee is working up the details of our installation and will report to you at a later meeting.

Bars are now in room ready to be permanently placed.

The death of Robert Swan has deprived the Committee of his co-operation.

Yours very truly,

LOUIS P. BLUM,
J. G. CHALFANT,
S. H. STUPAKOFF,
Committee.

At the request of President Duff, Mr. Blum explained the purpose of this Committee more in detail.

At a meeting of the Board of Direction about two years ago a Committee was appointed to endeavor to obtain the consent of the authorities of City and County for installation of a Bench Standard in the basement of the new City-County Building, such as is now used in Bureau of Standards at Washington and in one of the municipal buildings in Chicago, with the idea that engineers would have at their disposal means for accurately checking any standard of measure from 1 ft. to 100 ft. long. The Committee secured quarters from the Joint Building Committee of the City-County Building and are co-operating with the architect in this matter, and expect within the next six months to have the standard established.

REPORT OF TREASURER

To the Board of Direction,
Engineers' Society of Western Pennsylvania:

Your Treasurer takes pleasure in presenting the following statement of the finances of the Society for the year ending December 31, 1916:

INVESTMENTS

Building Fund

One $1000 Butler Water Company 5 percent Bond No. 9, matures September 2, 1931	$ 1 025.00

Permanent Fund

Two $1000 Connellsville Water Company 5 percent bonds, Nos. 317-318, maturing October 1, 1930	2 020.00
Two $1000 Portsmouth, Berkley & Suffolk Water Company 5 percent bonds, Nos. 465-466, maturing November 1, 1944	2 000.00
Two $1000 Jamison Coal & Coke Company 5 percent bonds, Nos. 1502-3, maturing November 1, 1931	2 000.00
Two $1000 Union Steel Company 5 percent bonds, Nos. 36642-43, maturing December 1, 1952	2 090.00
Two $1000 Pennsylvania Railroad Company 4½ percent bonds, Nos. 27320-21, maturing August 1, 1960	2 070.00
Three $1000 Jones & Laughlin Steel Company 5 percent bonds, Nos. 3020-3022, maturing May 1, 1931	2 997.92
Total fourteen bonds	$14 202.92

Receipts

Dues 1917	$ 55.00
Dues 1916	9 787.28
Dues 1915	295.33
Dues 1914	72.50
Dues 1913	35.00
Dues 1912	10.00
Dues 1911	5.00
Entrance fees	780.00
Advertising	1 809.96
Proceedings	753.17
Society Pins	82.50
Rent of auditorium	145.00
Banquet receipts	6 626.00
Interest	787.84
Military engineering lectures	851.51
A.S.C.E. smoker	857.50
Miscellaneous	17.62
	$22 971.21

Expenditures

Administration	$ 5 301.86
Entertainment	7 133.41
House	3 487.27
Library	45.38
General Society	1 873.52
Mechanical Section	124.41
Structural Section	149.21
Metallurgical and Mining Section	323.32
Proceedings	3 144.87
Advertising	26.50
Committee on Engineering Education	20.98
Membership Committee	67.71
Miscellaneous	295.59
	$21 994.03

	Dec. 31, 1915	Dec. 31, 1916
Permanent Fund—Bonds	$14 202.92	$14 202.92
Permanent Fund (Reserve Fund)—Cash	423.34	588.34
Building Fund—Cash	586.37	586.37
General Fund—Cash	143.04	955.22
	$15 355.67	$16 332 85
Increase in Assets for 1916 over 1915	977.18	
	$16 332.85	$16 332.85

Respectfully submitted,

ALBERT E. FROST, *Treasurer.*

REPORT OF MECHANICAL SECTION

To the Board of Direction,

Engineers' Society of Western Pennsylvania:

Four regular meetings of the Mechanical Section were held in 1916, with an average attendance of 95. The maximum attendance was 170, at the October meeting, and the minimum 40, at the April meeting. The average number participating in the discussion of papers was seven.

The papers presented were as follows:

February Meeting: "Pipe," by John A. McCulloch, Engineer, Galvanizing Works, National Tube Company, McKeesport, Pa.

April Meeting: "The Purchase of Large Machinery," by George A. Orrok, Mechanical Engineer, New York Edison Company, New York.

October Meeting: "Electrically Driven Reversing Rolling Mills," by Wilfred Sykes, General Engineer, Westinghouse Electric & Manufacturing Company, East Pittsburgh, Pa.

December Meeting: "The Window Glass Machine," by Robert Linton, Mining Engineer, Pittsburgh.

Respectfully submitted,

E. D. LELAND, *Chairman.*

REPORT OF METALLURGICAL AND MINING SECTION

To the Board of Direction,

Engineers' Society of Western Pennsylvania:

Five regular meetings of the Metallurgical and Mining Section of the Society were held in 1916, with an average attendance of 149, the maximum attendance being 260, at the November meeting, and the minimum attendance being 75, at the January meeting. The average number participating in the discussion of the papers was 11.

The papers presented were:

January Meeting: "The Zinc Smelter of Today," by F. E. Pierce, Consulting Engineer, New York City.

March Meeting: "The Utilization of By-Products from the Manufacture of Coke," by C. C. Atwater, Manager, Agricultural Department, The Barrett Company, New York City.

May Meeting: "Some Aspects of the Testing of Refractories," by A. V. Bleininger, Ceramic Chemist, U. S. Bureau of Standards, Pittsburgh.

September Meeting: "New Mining Methods as Practiced by the H. C. Frick Coke Company," by Patrick Mullen, Mine Inspector, H. C. Frick Coke Company, Scottdale, Pa.

November Meeting: "A Personally Conducted Trip to the H. Koppers By-Product Coke and Gas Plant of the LaClede Gas Company," by C. J. Ramsburg, Second Vice President, of the H. Koppers Company, Pittsburgh.

Respectfully submitted,

A. N. Diehl, *Chairman.*

REPORT OF STRUCTURAL SECTION

To the Board of Direction,
Engineers' Society of Western Pennsylvania:

I beg to submit the following report of the work done by the Structural Section during the year 1916:

Three regular meetings of the Section were held during the year. The average attendance at these meetings was 70, the maximum being 78 and the minimum 63.

An average of 10 participated in the discussions of the several papers presented. The papers read during the year were as follows:

January Meeting: "The Relation Between Engineers and Contractors," by James W. Rollins, President, Holbrook, Cabot & Rollins Corporation, Engineers and Contractors, Boston; Past President Boston Society of Civil Engineers.

March Meeting: "The Extent to Which Sewage Can Be Purified by Practical Methods Now in Use," by Harrison P. Eddy, of Metcalf & Eddy, Consulting Engineers, Boston, Mass.

October Meeting: "Factors Affecting Costs of Structural Steel Shop Work," by E. W. Pittman, Manager, Rankin Plant, McClintic-Marshall Company, and George H. Danforth, Structural Engineer, Jones & Laughlin Steel Company.

Respectfully submitted,

Horace R. Thayer, *Chairman.*

REPORT OF TELLERS

To the Members of Engineers' Society of Western Pennsylvania:

The undersigned Tellers publicly canvassed the ballots in the annual election of officers of the Society at noon, Tuesday, January 16, 1917, and beg to report the following results:

Ballots received	576
Irregular ballots	3
Ballots counted	573

For President	John N. Chester	109
	Alex. L. Hoerr	462
For Vice President	Robert A. Cummings	110
	George H. Neilson	461
For Treasurer	Albert E. Frost	526
For Directors	George H. Barbour	453
	Hermann Laub	128
	E. W. Pittman	446
	N. S. Sprague	115

Respectfully submitted,

F. C. Schatz,
F. M. Bowman,
C. M. Reppert,
Tellers.

The President thereupon declared the following men elected:

President	A. L. Hoerr
Vice President	George H. Neilson
Treasurer	Albert E. Frost
Directors	George H. Barbour
	E. W. Pittman

The President requested the two Junior Past Presidents, A. R. Raymer and A. Stucki, to escort President-elect Alex. L. Hoerr to the chair, who thereupon addressed the Society as follows:

"It is certainly an honor to be elected President of this Society. It has had a very honorable past; it has a record of achievement in many lines; many men who have participated in its management have been known throughout the country and some of them throughout the world; it is, therefore, an honor to be the presiding officer of such a Society, I can assure you, and I think I can speak for the other gentlemen who have been elected to office, that we will do everything within our power to maintain this record, that we will endeavor to keep abreast with the needs of the Society, and to do all of those things desired by the membership provided—several things, one of which is that we have the hearty co-operation of the membership and the participation of the membership in the doings of the Society.

"As you have noticed, the Society's affairs, financially, are in excellent shape; but any additional activities would necessarily be met with some additional financial requirements, since our margin for the past year was very slight. I can only assure you again of my appreciation of this honor, and trust that I can do with it what should be done."

No further business coming before the Society, the President's retiring adress on "Our Society" was presented by Samuel E. Duff, Consulting Engineer, Pittsburgh.

The ensuing discussion was participated in by: A. L. Hoerr, Chf. Engr., National Tube Co., McKeesport, Pa.; Harry J. Lewis, Cons. Engr., Pittsburgh; V. R. Covell, Deputy County Engr., Allegheny County, Pittsburgh; William E. Mott, Professor Civil Engineering, Carnegie Institute of Technology; Henry D. James, Asst. to Manager Engineering, Westinghouse Elec. & Mfg. Company, East Pittsburgh; H. H. Rankin, Mining Engr., Pittsburgh; A. Stucki, Cons. Engr., Pittsburgh; L. P. Blum, of Blum, Weldin & Co., Pittsburgh; Elmer K. Hiles, Secy., Engineers' Society of W. Pa.; and the author.

On motion the meeting adjourned at 10:30 P. M.

STRUCTURAL SECTION

The Anual Meeting of the Structural Section was held in the Society Rooms, Oliver Building, Pittsburgh, January 9, 1917, at 8:15 P. M., Chairman Horace R. Thayer presiding, 76 members and visitors being present.

The minutes of the last Annual Meeting were read and approved.

Mr. W. M. Judd, on behalf of the Nominating Committee, reported the nomination of the following officers for the ensuing year:

George W. Nichols.....Chairman
R. A. Pendergrass.....Vice Chairman
W. W. Hendrix
E. V. Braden
A. F. Gordon
.....Directors

No further nominations being made, the Secretary was instructed to cast a unanimous ballot for the members named, who were thereupon declared elected.

There being no further business, the meeting adjourned at 8:45 P. M.

The regular bi-monhtly meeting of the Structural Section of the Engineers' Society of Western Pennsylvania was held in the Society Rooms, Oliver Building, Tuesday, January 9, 1917, at 8:45 P. M., Chairman Horace R. Thayer presiding, 76 members and visitors being present.

The minutes of the last regular meeting, held October 31, were read and approved.

No further business coming before the Section, the retiring address of the Chairman was presented by Prof. Horace R. Thayer, Asst. Professor, Structural Design, Carnegie Institute of Technology, on "Historic Failures of Masonry Structures."

Written discussion was received from the following: Willis Whited, Engr. of Bridges, State Highway Dept., Harrisburg, Pa.; and John A. Ferguson, Secy.-Engr., Building Code Committee of Council, City of Pittsburgh.

Ensuing discussion was participated in by: Kenneth Talbot, Div. Engr., Inspection and Information Bureau, Universal Portland Cement Co., Pittsburgh; Edward Godfrey, Struct. Engr., Robert W. Hunt Co., Pittsburgh; C. M. Reppert, Div. Engr., Div. of Design, Bureau of Engineering, City of Pittsburgh; W. A. Weldin, Civ. Engr., Blum, Weldin & Co., Pittsburgh; G. L. Christy, Chf. Engr., Pittsburgh-DesMoines Steel Co., Pittsburgh; and the author.

The meeting adjourned at 11:05 P. M.

ELMER K. HILES, *Secretary.*

METALLURGICAL AND MINING SECTION

The Annual Meeting of the Metallurgical and Mining Section of the Engineers' Society of Western Pennsylvania was held in the Society Rooms, Oliver Building, January 30, 1917, at 8:15 P. M., Chairman A. N. Diehl presiding, 117 members and visitors being present.

The minutes of the last Annual Meeting, held January 25, 1916, were read and approved.

The Annual Report of the Chairman was read by the Secretary.

The report of the Nominating Committee was read by the Secretary, and it was moved and seconded that the ballots be closed and that the Secretary be instructed to cast a unanimous ballot for the nominees as given below:

W. L. Affelder.....Chairman

Frank N. Speller.....Vice Chairman

Robert Linton
H. H. Rankin
F. A. McDonald
G. L. Norris
H. C. Porter
.....Directors

The meeting adjourned at 8:30 P. M.

The regular bi-monthly meeting of the Metallurgical and Mining Section of the Society was held in the Society Rooms, Oliver Building, Tuesday, January 30, 1917, at 8:15 P. M., Chairman A. N. Diehl presiding, 117 members and visitors being present.

No further business coming before the Section, the topic of the evening on "The Possibilities of Smokeless Operation of Heating Furnaces and Soaking Pits" was presented.

Written discussion was presented by: Dr. John S. Unger, Mgr., Central Research Bureau, Carnegie Steel Co., Pittsburgh; W. E. Snyder, Mech. Engr., American Steel & Wire Co., Pittsburgh; and M. F. McConnell, Supt., Mingo Works, Carnegie Steel Co., Mingo Junction, O.

The ensuing discussion was participated in by: Julian Kennedy, Cons. Engr., Pittsburgh; Strickland Kneass, Jr., Acting Steam Engr., Youngstown Sheet & Tube Co., Youngstown, Ohio; Dr. H. C. Porter, Chemical Engr., H. Koppers Co., Pittsburgh; J. W. Henderson, Chief, Bureau of Smoke Regulation, City of Pittsburgh; A. L. Hoerr, Chief Engr., National Tube Co., McKeesport, Pa.; W. C. Graham, Mgr., Standard Steel Car Co., New Castle, Pa.; J. K. Lamoree, Asst. M. M., American Sheet & Tin Plate Co., New Castle, Pa.; F. E. Henry, Furnace Inspector & Erector, American Sheet & Tin Plate Co., New Castle, Pa.; A. N. Diehl, Asst. Gen. Supt., Carnegie Steel Co., Duquesne, Pa.; W. H. Smith, Ford Motor Car Co. (Engineering Dept.), Detroit, Mich.; H. C. Siebert, Steam Engr., Duquesne Works, Carnegie Steel Co., Duquesne; W. E. Porter, Asst. Chief, Bureau of Smoke Regulation, City of Pittsburgh; and J. R. Knopf, Engr., George J. Hagan & Co., Pittsburgh.

On motion the meeting adjourned at 10:35 P. M.

ELMER K. HILES, *Secretary.*

BOARD OF DIRECTION

The regular monthly meeting of the Board of Direction of the Engineers' Society of Western Pennsylvania was held in the Society Rooms, Oliver Building, Monday, January 8, 1917, at 4:10 P. M., President Samuel E. Duff, presiding, Messrs. Snyder, Danforth, James, Mott, Hoerr, Linton, Raymer, Stucki, Crabtree and the Secretary being present.

The minutes of the last regular meeting held December 4 and the minutes of the special meeting held December 18 were approved.

The applications of the following gentlemen having been regularly published to the Society pursuant to the action of the Board on November 6, were duly elected to membership:

MEMBERS

Coxe, Edward Haviland
Morse, George Hart

JUNIOR

Young, Vertrees

Applications of the following gentlemen were received and their names ordered published to the Society. Assignment to the various grades of membership is as follows:

MEMBERS

Allderdice, Taylor
Bland, J. C.
Donley, Wm. McClurg
Dudley, S. W.
Dunn, J. Jay
Eichleay, John Pollitt
Haldeman, James F.
Hansen, J. M.
Humphrey, A. L.
Keene, Elmer Livingstone
Kubitz, Fritz
Lingle, Chester Munson
McConway, William
O'Donnel, Richard Lincoln
Turner, Walter V.
Shoemaker, L. H.
Wright, Horace B.

UNASSIGNED

Alexander, Alfred Dwight
Brumby, Leslie Garnet

Application for transfer to higher grade was received from Maurice R. Scharff, who was thereupon transferred to the grade of Member.

The Secretary presented a request from Alfred Ackenheil for reinstatement to membership in the Society; whereupon the Secretary was authorized to replace his name upon the Society Rolls.

The Secretary presented letters of resignation from the following members of the Society which were accepted:

D. H. Chester.....Joined Feb., 1889—May, 1914
J. J. Convery.....Joined Jan., 1903
W. Samans .....Joined Dec., 1910

The report of the Secretary showing the financial condition of the Society at close of business November 30, having been previously audited by the Finance Committee, was approved.

President Samuel E. Duff presented the following call for a special meeting of the Society and advised the Board that after consultation with some of the gentlemen, called a meeting which was scheduled for Wednesday, December 27 and stating further that announcements of this meeting were mailed Friday, December 22, but that owing to the very congested condition obtaining in the Pittsburgh Post Office, it unfortunately resulted in a number of the members of the Society failing to receive their announcements until after the meeting.

Pittsburgh, Pa., Dec. 16, 1916.

To the President,
Engineers' Society of Western Penna.,
2511 Oliver Bldg., Pittsburgh.

Dear Sir:

We have just received a circular advocating the election of certain candidates for office in the Society, and stating that these candidates promise certain reforms in the conduct of the affairs of the Society.

Believing that the matters referred to are of such importance that they should be discussed at a meeting of the Society held prior to the election of officers, we would respectfully request that you call a special meeting, limited to members only, for the purpose of securing a full and frank discussion of the principles involved.

Respectfully submitted,

George S. Davison,	S. L. Tone,
Louis P. Blum,	W. C. Hawley,
John A. Ferguson,	E. K. Morse,
Emil Swensson,	N. S. Sprague,
W. A. Weldin,	Charles M. Reppert,
James O. Handy,	T. J. Wilkerson.

Mr. H. D. James requested that a letter be sent to the Officers of the American Institute of Electrical Engineers, extending the courtesy of the Society Rooms to the Institute on the occasion of their meeting in Pittsburgh, on Friday, January 12. Mr. James was authorized to extend this invitation.

The Secretary announced that he had mailed to the membership of the Society a card inviting our members to attend this meeting of the Institute.

The matter of placing a Suggestion Box in the Club Room of the Society was presented and after discussion the Secretary was authorized to place such a box in the Club Room, the box to have a lock and to be opened at the several meetings of the Board.

It was suggested that a card be placed on the box stating that communications placed in the box will be laid before the Board at its regular monthly meetings.

It is further suggested that announcement of this Suggestion Box be put in the first announcement printed after the first of February.

Prof. Crabtree, Chairman of the House Committee presented a progress report on the matter of securing new quarters for the Society. He stated that the matter had been taken up with the renting agents of a number of buildings in the downtown section of the city, but that nothing entirely satisfactory had been found to date. The Committee are still at work on the matter and hope to have something definite to report at its next meeting.

The Entertainment Committee through George H. Neilson, Chairman, presented a progress report announcing a Smoker to be held Saturday evening, January 20, in the English Room, Fort Pitt Hotel.

The meeting adjourned at 6:10 P. M.

Elmer K. Hiles, *Secretary.*

MECHANICAL SECTION

The Annual Meeting of the Mechanical Section of the Engineers' Society of Western Pennsylvania was held in the Society Rooms, Oliver Building, Pittsburgh, Tuesday, February 6, 1917, at 8:00 P. M., Chairman Leland presiding, 81 members and visitors being present.

The minutes of the last Annual Meeting held February 1, 1916, were read and approved.

The annual report of the Chairman was read by the Secretary.

The report of the Nominating Committee was presented as follows:

Officers and Members of Mechanical Section,
Engineers' Society of Western Penna.

Dear Sirs:

The committee on nominations for the ensuing year begs to report that the following members have consented to serve if elected to the various offices designated below:

Chairman	H. A. Rapelye W. Edgar Reed
Vice Chairman	L. C. Frohrieb Albert Kingsbury
Directors	J. D. Berg F. C. Biggert F. I. Ellis J. H. Fox J. A. Hunter W. Trinks

Your Committee is of the opinion that the Section will be well officered if it shall make its election from the above list.

Yours very truly,
WM. HOOPES,
HENRY R. CORNELIUS,
WM. F. HALL,
Nominating Committee.

Ballots were cast for the nominees for the several offices and report of tellers, Messrs. Glass, Hobbs and Goodale, was as follows:

H. A. Rapelye	Chairman
Albert Kingsbury	Vice Chairman
F. I. Ellis J. A. Hunter W. Trinks	Directors

On motion the Secretary was requested to cast this ballot and they were thereupon declared elected. Meeting adjourned at 8:30 P. M.

The regular bi-monthly meeting of the Mechanical Section of the Engineers' Society of Western Pennsylvania was held in the Society Rooms, Oliver Building, February 6, 1917, Chairman E. D. Leland presiding, 81 members and visitors being present.

The minutes of the last meeting held December 5, 1916, were read and approved.

No further business coming before the Section, the topical discussion of the evening on "The Burning of Blast Furnace Gas Under Boilers" was taken up.

Written discussion was received from: S. G. Brigel, Secy., Huessener Engineering Co., Inc., Pittsburgh; F. H. Wilcox, U. S. Bureau of Mines, Pittsburgh; H. C. Cronemeyer, Engineering Dept., Jones & Laughlin Steel Co., Pittsburgh, and Frank E. Leahy, Steam & Hydr. Engr., National Tube Co., McKeesport, Pa.

The ensuing discussion was participated in by: John Glass, Chf. Engr., Carnegie Natural Gas Co., Waynesburg, Pa.; E. D. Leland, Supt., Compressing Stations, Philadelphia Co., Pittsburgh; H. C. Siebert, Steam Engr., Duquesne Works, Carnegie Steel Co., Duquesne, Pa., and L. C. Frohrieb, Secy., Federal Engineering Co., Pittsburgh.

On motion the meeting adjourned at 10:00 P. M.

ELMER K. HILES, *Secretary.*

BOARD OF DIRECTION

The regular monthly meeting of the Board of Direction of the Engineers' Society of Western Pennsylvania was held in the Society Rooms, Oliver Building, Monday, February 5, 1917, at 4:00 P. M., President Alex. L. Hoerr presiding, Messrs. Neilson, Snyder, Pittman, Mott, Danforth, Crabtree, James, Duff and the Secretary being present.

The minutes of the last regular meeting held January 8, were read and approved.

The applications of the following gentlemen having been regularly published to the Society, pursuant to the action of the Board on January 8, were duly elected to membership:

MEMBERS

Allderdice, Taylor
Bland, J. C.
Donley, Wm. McClurg
Dudley, S. W.
Dunn, J. Jay
Eichleay, John Pollitt
Haldeman, James F.
Hansen, J. M.
Humphrey, A. L.
Keene, Elmer Livingstone
Kubitz, Fritz
Lingle, Chester Munson
McConway, William
O'Donnel, Richard Lincoln
Turner, Walter V.
Shoemaker, L. H.
Wright, Horace B.
Alexander, Alfred Dwight
Brumby, Leslie Garnet

Applications of the following gentlemen were received and their names ordered published to the Society. Assignment to the various grades of membership is as follows:

MEMBERS

Barchfield, Herman Charles
Brown, Charles J.
Buchanan, James Robert
Cook, Charles C.
Davis, Alan L.
Kelly, Raymond M.
Neff, Richard
Parsons, Stanley John
Parsons, Walter Jay
Stuart, George Johnston
Wayne, Elmer Conant
Zortman, Charles Edgar

JUNIOR

Woomer, Elmer E.

UNASSIGNED

Brandt, Edgar Cecil

The Secretary announced the deaths of the following gentlemen:

L. B. Fulton..... Joined Apr., 1888
F. F. Lovejoy..... Joined Nov., 1914
Robert S. Orr..... Joined Oct., 1899

Messrs. S. L. Tone and Robert Linton were requested to prepare a memoir of Robert S. Orr.

Messrs. George S. Davison and W. G. Wilkins were requested to prepare a memoir of L. B. Fulton.

The report of the Secretary showing the financial condition of the Society at the close of business December 31, having been previously audited by the Finance Committee, was approved.

Mr. Elmer K. Hiles was re-elected Secretary of the Society.

The Entertainment Committee presented a report covering the Smoker held January 20 at the Ft. Pitt Hotel.

The House Committee presented a verbal report covering various suggested quarters for the Society and it was agreed that the Committee should again take up the matter of quarters with the Renting Agent of the Union Arcade Building, with an idea of endeavoring to secure more favorable location in the building than the dark upper floors which had previously been offered by the agent.

It was agreed that Mr. Samuel E. Duff's Presidental Address, "Our Society," should be published and distributed to the members of the Society as a special communication, separate from the Proceedings of the Society.

The meeting adjourned at 6:30 P. M.

A special meeting of the Board of Direction of the Engineers' Society of Western Pennsylvania was held in the Society Rooms, Oliver Building, Tuesday, February 6, 1917, at 5:00 P. M., Vice-President W. E. Snyder presiding, Messrs. Mott, James, Stucki, Danforth, Duff, Crabtree, Pittman, Taylor and the Secretary being present.

The Secretary announced that the special meeting of the Board had been called to receive and take action upon a joint report of the House Committee and Special Committee on Quarters.

Prof. Crabtree reported that the House Committee, accompanied by the Special Committee on Quarters, Messrs. S. A. Taylor and Elmer K. Hiles, had called upon Mr. F. H. Heywood, renting agent for the Union Arcade Building, and had secured an option on Rooms 565, 567 568 and 569 on the fifth floor of the Union Arcade Building, with a frontage on Fifth Avenue and William Penn Way.

It was believed that this space would be sufficient for office and Club Room requirements.

Prof. Crabtree further advised that Mr. Heywood had agreed to place at the disposal of the Society an auditorium with a seating capacity of 150 to 200 people in which the Society could hold its meetings on the first, third and fourth Tuesdays, and also that the main auditorium of the building, seating 600 to 800 people, would be placed at the disposal of the Society as required for six or eight meetings during the year for which the smaller auditorium would be inadequate.

After discussion, it was ordered, upon motion duly made and seconded, that the House Committe and Special Committee on Quarters be authorized to enter upon arrangements to lease quarters in the Union Arcade Building upon the terms and with the privileges as above mentioned by Prof. Crabtree, and further that the President and Secretary of the Society be authorized to execute and sign the lease in the name of the Society.

The meeting adjourned at 6:30 P. M.

A special meeting of the Board of Direction of the Engineers' Society of Western Pennsylvania was held in the Society Rooms, Oliver Building, Wednesday, February 14, 1917, at 7:30 P. M. President Alex. L. Hoerr presiding, Messrs. Frost, Danforth, Pittman, Neilson, James, Snyder, Duff, Stucki and the Secretary being present.

President Hoerr advised the Board that the special meeting had been called to discuss and formulate plans for furthering the interests of the Society.

A general discussion of several items suggested in the first circular signed and sent out by some seventy-four members of the Society, to-

gether with suggestions made in Mr. W. E. Snyder's letter read at the last meeting of the Board and other matters was had.

Two general suggestions for handling the matters were considered:

First: That three special committees be appointed as follows:

1. Committee to take up the matter of revision of By-Laws and method of nominating officers.
2. Club and social features of the Society.
3. Society relations.

Second: The method of handling the matter suggested so as to have one general committee to take the matter up following Mr. Samuel E. Duff's suggested resolution made in his Annual Address.

After a general discussion it was agreed that the following motion should be offered by Mr. Samuel E. Duff at the meeting of the Society to be held February 20.

Resolved, That a committee of fifteen corporate members be appointed by the President, one of whom he shall designate the Chairman, to examine the By-Laws and activities of the Society and report at the May meeting of the Board of Direction, whether or not any changes in the By-Laws or activities of the Society are expedient at this time, and to lay before the Board in detail at the same time any changes recommended; and further,

Resolved, That this Committee shall be composed of three Past Presidents (not members of the Board of Direction), three members of the Board of Direction, and nine Corporate members of the Society who have never been officers; and further,

Resolved, That the Committee shall be instructed to give notice to all members of the Society (said notice to be mailed before March 1st) requesting all members to present to the Chairman of the Committee in writing on or before April 1, 1917, any changes in the By-Laws or activities of the Society the members desire to have made at this time.

The meeting adjourned at 10:00 P. M.

ELMER K. HILES, *Secretary.*

REGULAR MONTHLY MEETING

The 359th regular monthly meeting of the Engineers' Society of Western Pennsylvania was held in the Lecture Hall of the Carnegie Institute on Tuesday evening, February 20, 1917, at 8:15 P. M., President Alex. L. Hoerr presiding, 515 members and visitors being present.

The minutes of the last regular meeting held December 12, 1916, were read and approved.

The minutes of the regular monthly meeting of the Board of Direction held February 5th and of the special meetings held February 6th and 14th were read. The Board of Direction reported the election of nineteen applicants to membership in the Society and the receipt of 14 applications for membership.

The Board further announced that new quarters for the Society had been leased on the fifth floor of the Union Arcade Building and that the Society would take possession of their new quarters the latter part of April of this year.

Mr. Samuel E. Duff presented the following resolution which was duly seconded and thereupon carried unanimously:

"RESOLVED: That a Committee of fifteen Corporate members be appointed by the President, one of whom he shall designate the Chairman, to examine the By-Laws and activities of the Society and report at the May meeting of the Board of Direction, whether or not any changes in the By-Laws and activities are expedient at this time, and to lay before the Board in detail at the same time any changes recommended; and further

RESOLVED: That this Committee be composed of three Past Presidents (not members of the Board of Direction), three Members of the Board of Direction, and nine Corporate members of the Society who have never been officers; and further

RESOLVED: That the Committee shall be instructed to give notice to all members of the Society (said notice to be mailed before March 1, 1917), requesting all members to present to the Chairman of the Committee in writing on or before April 1, 1917, any changes in the By-Laws and activities of the Society the members desire to have made at this time."

No further business coming before the Society, Lieut. G. L. Faulkner of the Royal Flying Corps, British Army, presented a lecture on "Aeroplane in Warfare."

At the close of the meeting a vote of thanks was extended to Lieut. Faulkner for addressing the Society.

The meeting adjourned at 10:45 P. M.

The 360th regular monthly meeting of the Engineers' Society of Western Pennsylvania was held in the Society Rooms, Oliver Building, Tuesday evening, March 20th, 1917, at 8:08 P. M., President Alex. L. Hoerr presiding, 80 members and visitors being present.

The minutes of the last regular meeting held February 20th, were read and approved.

The minutes of the regular monthly meeting of the Board of Direction held March 5th, were read. The Board of Direction reported the election of eighteen applicants to membership in the Society, the receipt of nine applications for membership and the transfer to higher grade of one member.

President Alex. L. Hoerr announced the appointments on the Special Committee on By-Laws and Activities as follows:

W. G. Wilkins, Chairman.

L. P. Blum	H. J. Lewis
G. H. Danforth	L. C. Moore
A. N. Diehl	A. D. Neeld
W. E. Fohl	E. W. Pittman
J. O. Handy	Floyd Rose
L. F. W. Hildner	W. T. Snyder
H. D. James	N. W. Storer

There being no further business, the paper of the evening on "Important Features Relating to the Design and Improvement of City Streets" was presented by Mr. N. S. Sprague, Chf. Engr., Bureau of Engineering, Dept. Public Works, City of Pittsburgh.

The ensuing discussion was participated in by: George H. Neilson, Gen. Mgr., Braeburn Steel Co., Braeburn, Pa.; Louis P. Blum, Blum Weldin & Co., Pittsburgh; Kenneth Talbot, Div. Engr., Inspection & Information Bureau, Universal Portland Cement Co., Pittsburgh; Samuel E. Duff, Cons. Engr., Pittsburgh; J. M. Larned, Engr. M. of W., Pittsburgh Railways Co.; E. E. Duff, Jr., Borough Engr., Borough of Sewickley; C. M. Reppert, Div. Engr., Div. of Design, Bureau of Engineering, City of Pittsburgh; Edward A. Beck, Boro Mgr., Borough of Edgeworth, Edgeworth, Pa.; J. P. Leaf, Municipal Engr., Rochester, Pa., and the author.

The meeting adjourned at 10:53 P. M.

Elmer K. Hiles, *Secretary.*

STRUCTURAL SECTION

The regular bi-monthly meeting of the Structural Section of the Society was held in the Society Rooms, Oliver Building, on Tuesday evening, March 6, 1917, at 8:10 P. M. Chairman George W. Nichols presiding, 81 members and visitors being present.

The minutes of the last regular meeting held January 9, 1917, were read and approved.

No further business coming before the Section, the subject of the evening was presented by Mr. J. L. Shields, Engr., National Fireproofing Co. (in the absence of Mr. J. P. Barr, who failed to attend the meeting and also failed to send in his manuscript) on "Fireproofing and Fireproofing Methods."

Ensuing discussion was participated in by: James O. Handy, Director of Laboratories, Pittsburgh Testing Laboratory; John A. Ferguson, Secy-Engr., Building Code Committee of Council, Pittsburgh; W. W. Hendrix, Mgr. Sales, Tank Dept., Pittsburgh DesMoines Steel Co., Pittsburgh; Elmer K. Hiles, Secy. Engineers' Society of W. Pa.; Henry D. James, Asst. to Mgr. Engineering, Westinghouse Elec. & Mfg. Co., East Pittsburgh, Pa.; Edward Godfrey, Struct. Engr., Robt. W. Hunt & Co., Pittsburgh; George T. Haldeman, Asst. Mining Engr., Lehigh Valley Coal Co., WilkesBarre, Pa.; L. G. Brumby, Draftsman, American Bridge Co., Ambridge, Pa.; Prof. S. L. Goodale, Professor Metallurgy, University of Pittsburgh; Dr. K. F. Stahl, Cons. Chemist, 57th St. & A. V. R. R., Pittsburgh; E. V. Braden, Engr., P. C. & Y. Rwy. Co. & Chartiers Southern Rwy., Pittsburgh, and Mr. Shields.

It was moved, seconded and passed unanimously that a vote of thanks be extended to Mr. Shields for his courtesy in opening the discussion.

The meeting adjourned at 9:35 P. M.

ELMER K. HILES, *Secretary.*

BOARD OF DIRECTION

The regular monthly meeting of the Board of Direction of the Engineers' Society of Western Pennsylvania was held in the Society Rooms, Oliver Building, Monday, March 5, 1917, at 4:10 P. M. President Alex. L. Hoerr, presiding, Messrs. Snyder, Pittman, Stucki, Danforth, Neilson, James, Linton, Mott, Barbour and the Secretary being present.

The minutes of the last regular meeting held February 5th and of the special meetings held February 6th and 14th, were read and approved.

The applications of the following gentlemen having been regularly published to the Society, pursuant to the action of the Board on February 5th, were duly elected to membership:

MEMBERS

Brant, Edgar Cecil
Barchfield, Herman Charles
Brown, Charles J.
Buchanan, James Robert
Cook, Charles C.
David, Alvan L.
Dillon, Sydney
Dunlevy, David M.
Kelly, Raymond M.
Lockhart, J. M.
Neff, Richard
Parsons, John Stanley
Parsons, Walter Jay
Schneider, Reinhold
Stuart, George Johnston
Wayne, Elmer Conant
Zortman, Charles Edgar

JUNIOR

Woomer, Elmer E.

Applications of the following gentlemen were received and their names ordered published to the Society. Assignment to the various grades of membership is as follows:

MEMBERS

Allen, Frank Berry
Collins, John Edward
Everhard, Edgar Philip
Gilbert, Melvin A.
Kidd, Walter Scott
McCausland, William Darker
Purdy, William Franklin
Spellmire, Walter B.

ASSOCIATE MEMBER

Giles, David John

Application for transfer to higher grade was received from Simeon Buka, who was thereupon transferred to the grade of Associate Member.

The Secretary presented resignations from the following members, which were ordered accepted:

J. M. Nesbit..... Joined Oct., 1913
W. P. Chandler, Jr..... Joined June, 1914
W. J. Sheldon..... Joined Oct., 1914
Aloys A. Voelker..... Joined Oct., 1914
G. A. Paff..... Joined Sept., 1912

The report of the Secretary showing the financial condition of the Society at close of business December 31st, having been previously audited by the Finance Committee, was approved.

The Secretary announced that the collections for the Brashear Memorial Fund amounted to $88.00 and asked authority to transfer this fund to the proper authority the Brashaer Memorial Association, which was granted.

Mr. George H. Neilson, Chairman Entertainment Committee reported that new members of the Committee had been appointed.

Mr. Robert Linton, reported for the Finance Committee that the Secretary's accounts had been audited and found correct.

Mr. George H. Danforth, Chairman House Committee, announced that members of the House Committee had been appointed.

Mr. Henry D. James, Chairman, reported a meeting of the Membership Committee and presented a petition to the Board requesting that the Board lease an additional room adjoining our new quarters in the Union Arcade Building in order that additional space in our new quarters might be devoted exclusively to Club Room conveniences. After a discussion in which the matter of arrangements of partitions in our new quarters was discussed, the matter of extension and arrangement of our new quarters was referred to the House Committee with power to act.

The Secretary presented a letter from Prof. Elton D. Walker, Pennsylvania State College, urging that the Society take action with regard to urging Senators and Representatives at Harrisburg to secure the passage of House Bill No. 512, an Act making an appropriation to the Topographic & Geological Survey of Pennsylvania.

The Secretary was authorized to write such letters.

The meeting adjourned at 5:50 P. M.

A special meeting of the Board of Direction was held in the Society Rooms, Oliver Building, Tuesday afternoon, March 20th, at 4:30 P. M., President A. L. Hoerr presiding, Messrs. Neilson, Duff, Pittman, Stucki, Danforth, Linton, Snyder, Mott, Barbour and the Secretary being present.

Mr. George H. Danforth, Chairman of the House Committee, presented a statement of the House Committee as to the proposed expense and income in connection with an additional room in the Union Arcade Building, the leasing of which was requested by the Membership Committee, recommending that he believed that the leasing of such an additional room would be inadvisable on account of expense.

The Board adjourned to the Union Arcade Building to inspect the new quarters and the proposed additional room. Upon returning to the Society Rooms, a general discussion was had regarding the matter of leasing the additional room. The following motion was made and seconded:

That it is not advisable to lease an additional room in connection with the new quarters of the Society at this time, pending a report from the Special Committee. The motion carried unanimously.

The matter of the subdivision of the space at present under lease was discussed and it was agreed to have an arch way put in the partition between rooms 565 and 567. It was further agreed that the doorway between rooms 567 and 568 be moved over between the column and the corrider partition and that the partition be placed between rooms 568 and 569; the door in this partition being located as near the corrider partition as possible.

The meeting adjourned at 5:50 P. M.

ELMER K. HILES, *Secretary.*

REGULAR MONTHLY MEETING

The 361st regular monthly meeting of the Engineers' Society of Western Pennsylvania was held in the Society Rooms, Oliver Bldg., Tuesday evening, April 24, 1917, at 8:17 o'clock, President Alex. L. Hoerr presiding, 70 members and visitors being present.

The minutes of the last meeting, held March 20, were read and approved.

The minutes of the regular monthly meeting of the Board of Direction, held April 2, were read. The Board of Direction reported the election of eight applicants to the grade of Member and one to the grade of Associate Member; the receipt of 15 applications for membership and the reinstatement of one member.

No further business coming before the Society, the paper of the evening on "Broad Rails versus Deep Rails" was presented by George H. Barbour, Mechanical Engineer, Carnegie Steel Co., Pittsburgh.

Written discussion was received from the following gentlemen: Paul M. La Bach, Asst. Engr., Chicago, Rock Island & Pacific R. R., Chicago, Ill.; P. H. Dudley, Cons. Engr., New York Central Lines, New York City; Gustav Lindenthal, Cons. Engr., New York City; G. W. Vaughan, Engr., Maintenance of Way, New York Central R. R. Co., New York City; George L. Fowler, Cons. Engr., New York City.

The ensuing discussion was participated in by: C. B. Bronson, Assistant to P. H. Dudley, New York Central Lines, New York City; W. C. Cushing, Chf. Engr., Maintenance of Way, Penna. Lines, Pittsburgh; S. A. Taylor, Cons. Engr., Second National Bank Bldg., Pittsburgh; H. H. Rankin, Civil and Mining Engr., Pittsburgh; and the author.

On motion the meeting adojurned at 10:00 P. M.

ELMER K. HILES, *Secretary.*

MECHANICAL SECTION

The regular bi-monthly meeting of the Mechanical Section of the Engineers' Society of Western Pennsylvania was held in the Society Rooms, Oliver Bldg., April 3, 1917, at 8:05 P. M., Chairman H. A. Rapelye presiding, 48 members and visitors being present.

The minutes of the last meeting, held February 6, 1917, were read and approved.

There being no further business coming before the Section, the paper of the evening on "Cotton Rope for Power Transmission" was presented by John M. Alison, Engr., William Kenyon & Sons, Ltd., Dukinfield, England.

Written discussion was received from Prof. Willibald Trinks, Professor, Mechanical Engineering, Carnegie Institute of Technology, Pittsburgh.

The ensuing discussion was participated in by: S. L. Goodale, Professor of Metallurgy, University of Pittsburgh; J. C. Allen, Civ. Engr., Carnegie Steel Co., New Castle, Pa.; H. A. Rapelye, Sales Engr., Terry Steam Turbine Co., Pittsburgh; Elmer K. Hiles, Secy., Engineers' Society of W. Pa.; George A. Rigby, M. M., Carnegie Steel Co., New Castle, Pa.; F. L. Egan, Engr., H. Koppers Co., Pittsburgh; and the author.

It was moved, seconded and passed unanimously that a vote of thanks be extended to Mr. Alison for his interesting paper.

The meeting adjourned at 9:39 P. M.

ELMER K. HILES, *Secretary*.

BOARD OF DIRECTION

The regular monthly meeting of the Board of Direction of the Engineers' Society of Western Pennsylvania was held in the Society Rooms, Oliver Bldg., Monday, April 2, at 4:00 P. M., President Alex. L. Hoerr presiding, Messrs. Snyder, Neilson, Stucki, Duff, Pittman, James, Frost, Danforth, Mott and the Secretary being present.

The minutes of the last regular meeting held March 5, and of the special meeting held March 20, were read and approved.

The applications of the following gentlemen having been regularly published to the Society, pursuant to the action of the Board on March 5, were duly elected to membership:

MEMBERS

Allen, Frank Berry
Collins, John Edward
Everhard, Edgar Philip
Gilbert, Melvin A.
Kidd, Walter Scott
McCausland, William Darker
Purdy, William Franklin
Spellmire, Walter B.

ASSOCIATE MEMBER

Giles, David John

Applications of the following gentlemen were received and their names ordered published to the Society. Assignment to the various grades of membership is as follows:

MEMBERS

Bailey, John M.
Leland, Ralph Marshall
Minton, Junius Harvey
O'Donovan, James S.
Ray, Edgar Harman
Slocum, Roy Laishley
Spilsbury, Hugh Gybbon

ASSOCIATE MEMBERS

Abbott, William Lincoln, Jr.
McCall, Clarence H.
Warren, George Edgar
Wragg, Laishley Palmer

JUNIORS

Bowman, Selwyn Taylor
Davis, Philip Oudry
Schneider, Arnold A.
Weber, Karl B.

The Secretary announced that Mr. J. W. Cruickshank, who joined the Society in April, 1904, and resigned in December, 1914, desired to be reinstated, whereupon the Secretary was authorized to replace his name upon the Society rolls.

The Secretary presented letters of resignation from the following gentlemen:

W. E. Emley ..... Joined December, 1913
S. B. Flagg ..... Joined March, 1912
W. A. Phillis ..... Joined February, 1914

and after reports by Messrs. Snyder, Danforth and the Secretary, they were ordered accepted.

The Secretary announced the death of Mr. George W. Schluederberg, who joined the Society in March, 1892, and died April 1, 1917. The Secretary was requested to endeavor to secure a memoir of Mr. Schluederberg from Mr. S. A. Taylor.

The report of the Secretary showing the financial condition of the Society at close of business January 31, having been previously audited by the Finance Committee, was approved.

Prof. Wm. E. Mott, Chairman, Publication Committee, reported that the organization meeting of the committee would be held Wednesday evening, April 4.

Mr. George H. Neilson, Chairman, Entertainment Committee, presented the matter of a housewarming upon the removal of the Society to the new quarters in the Union Arcade Bldg., advising that the matter had been considered by the Entertainment Committee and that the several tentative suggestions regarding the scope of the entertainment had been made. It was thought that dancing should be arranged for and that refreshments should be served. After discussion, the Entertainment Committee was authorized to arrange for a housewarming. Details of the entertainment, etc., were left in the hands of the Committee.

Mr. George H. Danforth, Chairman, House Committee, advised that the House Committee would meet in the near future to take up the matter of necessary furnishings, etc.

The Secretary read letters from Mr. N. S. Sprague, a member of the House Committee, and Mr. George H. Danforth, Chairman, relative to matters in connection with the proposed leasing of additional space in the Union Arcade Bldg. adjacent to the new quarters of the Society. The letters were ordered accepted and filed in the Board of Direction file.

The Secretary read the following letter from Mr. B. H. Taylor:

March 23, 1917.

Mr. Elmer K. Hiles, Secy.,

Engineers' Society of Western Penna.

Dear Mr. Hiles:

Since it seems inevitable that our country will become involved more or less in the prevailing world war, it seems to me that the Engineers' Society of Western Pennsylvania should now offer its services to the Nation, in order that its members could be called upon to aid in such capacity as the country's needs may develop.

I would suggest that you bring this idea to the attention of the officers of the Society for their consideration.

Yours truly,
(Signed) B. H. Taylor.

After discussion, the President and Secretary of the Society were authorized to sign and forward a letter to the President of the United States offering the services and facilities of the Society to the Nation.

The meeting adjourned at 5:35 P. M.

Elmer K. Hiles, *Secretary.*

REGULAR MONTHLY MEETING

The 362nd regular monthly meeting of the Engineers' Society of Western Pennsylvania was held in Society Rooms, Union Arcade Building, Tuesday evening, May 29, 1917, at 8:20 P. M., President Alex. L. Hoerr, presiding, 97 members and visitors being present.

The minutes of the last regular monthly meeting held April 24th were read and approved.

The Board of Direction reported the election of eight applicants to the grade of Member; four to the grade of Associate Member; and four to the grade of Junior. Also the receipt of five applications for membership.

President Alex. L. Hoerr presented a Gold and a Silver Medal awarded by the Board of Direction through its Medal Award Committee, for the two best papers presented during the past year; the gold medal to A. L. Humphrey for his paper on "Mobilization of Material and Industrial Resources" and the silver medal to Robert Linton for his paper on "The Window Glass Machine."

No further business coming before the Society the paper of the evening on "An Efficient Gas Fired Boiler Installation" was presented by Mr. J. C. Hobbs, Assistant to Superintendent, Duquesne Light Co.

Written discussion was received from: L. C. Frohrieb, Secy. Federal Engineering Co.; A. G. Davis, Chemist, Philadelphia Co.

The ensuing discussion was participated in by: Alex. L. Hoerr, Chf. Engr. National Tube Co., McKeesport, Pa.; Dr. Thomas Turnbull, Jr., Director Tate Jones & Co., Pittsburgh; E. D. Leland, Supt. Compressing Stations, Philadelphia Co., Pittsburgh; H. C. Siebert, Steam Engr., Carnegie Steel Co., Duquesne, Pa.; and the author.

It was moved by Mr. Leland that a letter be written by the Acting Secretary to Mr. Hiles, expressing the good wishes and good will of our Society. Motion seconded and carried unanimously.

On motion the meeting adjourned at 10:20 P. M.

K. F. Treschow, *Acting Secretary.*

STRUCTURAL SECTION

The regular bi-monthly meeting of the Structural Section of the Engineers' Society of Western Pennsylvania was held in the Society Rooms, Union Arcade Bldg., Tuesday, May 1, 1917, at 8:10 P. M., Past

Chairman Horace R. Thayer presiding in the absence of the Chairman, 60 members and visitors being present.

The minutes of the last regular meeting held March 6, 1917 were read and approved.

No further business coming before the Section, the paper of the evening on "Some Fundamentals of School House Design" was presented by Mr. C. L. Wooldridge, Superintendent of Buildings, Board of Public Education, Pittsburgh.

The ensuing discussion was participated in by: J. A. Ferguson, Secy-Engr., Building Code Committee of Council, Pittsburgh; H. R. Thayer, Asst. Professor Structural Design, Carnegie Institute of Technology; L. P. Blum, Blum Weldin & Co., Pittsburgh, Pa.; W. R. C. Rowan, Secy. & Sales Mgr., Mazer Acoustile Co., Pittsburgh, Pa.; H. M. Eastman, Struct. Engr. & Draftsman, Keystone Works, Jones & Laughlin Steel Co., Pittsburgh; Harry J. Lewis, Cons. Engr., Pittsburgh; G. H. Danforth, Struct. Engr., Jones & Laughlin Steel Co., Pittsburgh, Pa.; H. H. Rankin, Civil & Mining Engr., Pittsburgh; and the author.

On motion the meeting adjourned at 10:00 P. M.

ELMER K. HILES, *Secretary.*

BOARD OF DIRECTION

The regular monthly meeting of the Board of Direction of the Engineers' Society of Western Pennsylvania was held in the Society Rooms, Union Arcade Bldg., Tuesday afternoon, May 8, 1917, at 4:20 P. M., President Alex. L. Hoerr presiding, Messrs. James, Duff, Snyder, Stucki, Danforth, Pittman, Mott and the Secretary being present.

The minutes of the last regular meeting held April 2nd were read and approved.

The applications of the following gentlemen having been regularly published to the Society, pursuant to the action of the Board on April 2nd, were duly elected to membership:

MEMBERS

Bailey, John M.	Pierce, Lonnie John
Leland, Ralph M.	Ray, Edgar Harman
Minton, Junius Harvey	Slocum, Roy Laishley
O'Donovan, James S.	Spilsbury, Hugh Gybbon

ASSOCIATE MEMBERS

Abbott, William Lincoln, Jr.
McCall, Clarence H.
Warren, George Edgar
Wragg, Laishley Palmer

JUNIORS

Bowman, Selwyn Taylor
Davis, Philip Oudry
Schneider, Arnold A.
Weber, Karl B.

Applications of the following gentlemen were received and their names ordered published to the Society. Assignment to the various grades of membership is as follows:

MEMBERS

McNiff, Gilbert Peters
Miller, Walter Raymond
Toner, Arthur Carling

JUNIORS

Douthett, George Mellon
O'Connor, Maurice James, Jr.

The Secretary presented letters of resignation from the following gentlemen and after discussion they were ordered accepted.

Ferguson, Clarence A.
Hardy, George
Lavelle, T. M.
Ramage, E. C.

The Secretary announced the death of Mr. W. T. Monroe, who joined the Society October, 1906, and died Dec. 30, 1916.

The report of the Secretary showing the financial condition of the Society at close of business March 31st, having been previously audited by the Finance Committee, was approved.

Mr. H. D. James, Chairman of the Membership Committee, advised that no meetings of the Committee had been held since the last meeting of the Board, owing to demands upon the time of some members by the Special Committee on By-Laws.

Mr. George H. Danforth, Chairman of the House Committee reported that the new quarters of the Society were about in order.

It was moved and carried that this May meeting of the Board be adjourned to meet at the call of the President in order to receive the report of the Special Committee appointed by the Society to examine the By-Laws and Activities of the Society.

The Secretary was requested to send a copy of the report of the Committee to members of the Board as quickly as may be in order that they may have the papers in hand as long before the next meeting of the Board as possible.

The meeting adjourned at 5:05 P. M.

ELMER K. HILES, *Secretary.*

CONTINUATION OF MAY MEETING OF THE BOARD OF DIRECTION.

The continuation of the May 8th regular monthly meeting of the Board of Direction of the Engineers' Society of Western Pennsylvania was held in the Society Rooms, Union Arcade Bldg. on May 22nd, at 4:20 P. M., President Alex. L. Hoerr presiding, Messrs. Snyder, Danforth, Pittman, Stucki, Barbour and Duff being present.

Mr. Hoerr advised that the purpose of the meeting was to receive and take action on the Report of the Special Committee appointed by the Society to examine the By-Laws and Activities of the Society. It was moved and carried that the report of the committee be received and considered.

After a general discussion of suggested changes, it was moved and carried that the report of the Committee be printed and mailed to all Corporate members of the Society as soon as possible and that a special meeting of the Society be called for June 12th; as after discussing the report, the Board felt that a matter of this kind required that a special meeting of the Society be called, at which all members might be present to discuss the different changes proposed.

The President was authorized to secure legal counsel in regard to the handling of the finances of the Society during the period of the Secretary's absence while in active duty in the United States Army.

The meeting adjourned at 6:15 P. M.

K. F. Treschow, *Acting Secretary.*

PERSONAL ITEM

T. F. Webster, for 25 years associated with the Link Belt Company and for the last 12 years manager of its Pittsburgh office, has resigned to become vice-president of the R. H. Beaumont Company, Philadelphia, builder of conveying and hoisting systems. He will identify himself with the sales department.

BOOK REVIEW

"Great Arches," by Paul Sejourne. 1732 pages, in six volumes of quarto size; 334 photographic views and 896 other illustrations. Tardy-Pigelet et Fils, Bourges, France. $50.00.

It is perhaps only once in a lifetime that an engineer has an opportunity to review such a phenomenal book as Monsieur Sejourne's treatise on "Great Arches"; and in the necessarily limited space alloted to this communication one cannot begin to do justice to either the book or his own ability as a reviewer; hence the writer of this critique must content himself with mentioning a few salient features of that monumental work, which is undoubtedly destined to serve for many years to come as a model for technical book writing and publication in all that relates to clearness, thoroughness, elegance of diction, and beauty of finish.

The book is issued in six volumes of quarto size, printed on very heavy paper in exceedingly clear and neat style, and illustrated profusely with most artistic photographs and beautifully prepared drawings. No expense has been spared in its production, excepting only that it is paper-bound and that the leaves are uncut. Such a style of finish, while eminently elegant, is not the kind that is best adapted to the wants of American engineers, who desire books printed on thinner paper, substantially bound, and having the leaves cut; for in this country the factor of serviceability is always the governing requirement, while in more artistic France the aesthetic features are of prime importance.

The book, which is published by Messrs. Tardy-Pigelet et Fils of Bourges, contains, all told, 1732 pages, 334 photographic views, 896 other illustrations, and tables galore—in fact the first four volumes consist essentially of tabulated matter and illustrations. Too great praise cannot be given to these tabulations. They contain practically all the information that any reader could desire; and they must have required for preparation many years of hard work and the constant taking of infinite pains.

To benefit materially by the book, an engineer does not even need to know how to read French, because a study of the illustrations alone would afford a liberal education in bridge aesthetics. Every American engineer who designs reinforced concrete bridges (and their number is constantly increasing, especially in these days of excessively-high-priced structural steel) should either possess a copy of his own, or should be able to consult one whenever undertaking to design a concrete arch bridge. A thorough study of this treatise by a large majority of American bridge designers could not

fail to improve materially the general appearance of our future arch-bridges; and it must be confessed that, in respect to aesthetics in design, the engineers of this country are not as proficient as might be desired.

Many American engineers may consider the price of this set of books (250 francs, or about $50.00) to be prohibitory, but that is because they have been spoiled of late years by the exceedingly low prices of many fine American technical books. Some decades ago prices several times greater for works of far less merit were quite common, notwithstanding the very much lower cost of living in those days and the consequently smaller incomes of engineers. Former luxuries are now necessities; and this statement is especially applicable to engineering literature.

Bridge engineers residing in the large centers of population should persuade the librarians of the public libraries to purchase this book for reference-use; and all professors of structural engineering should see that it is ordered for the libraries of their institutions. When a great and important work like the one under review is placed upon the market, it should be utilized to the utmost, not only to benefit the profession, but also as a fit acknowledgment to the author of his laudable efforts for the good of mankind. Technical book writers certainly need all the encouragement they can get, because the labor and the expense of preparing the manuscript are excessive, and the pecuniary reward is generally *nil*.

Dr. J. A. L. Waddell.

SPECIAL MEETING

A special meeting of the Engineers' Society of Western Pennsylvania was held in Carnegie Lecture Hall, Pittsburgh, Monday evening, June 4, 1917 at 8:20 P. M., E. W. Pittman presiding in the absence of the President; 165 members and visitors being present.

The lecture of the evening was given by Mr. C. L. Lucas, Associate Editor of "Machinery" on the "Process of Manufacture of 9.2 in. High Explosive Howitzer Shells" and illustrated by motion pictures.

It was moved by Mr. E. D. Leland that a vote of thanks be extended to "Machinery" and to Mr. Lucas for the very instructive as well as entertaining presentation of this most interesting subject. Motion carried unanimously.

The meeting adjourned at 9:35 P. M.

K. F. Treschow, *Acting Secretary.*

BOARD OF DIRECTION

The regular monthly meeting of the Board of Direction of the Engineers' Society of Western Pennsylvania, was held in the Society Rooms, Union Arcade Building, Monday, June 4, 1917 at 4:20 P. M. President Alex. L. Hoerr presiding, Messrs. Pittman, Danforth, Duff, Barbour, Neilson, Stucki, James and Snyder being present.

The minutes of the last regular monthly meeting held May 8th, were read and approved.

The applications of the following gentlemen having been regularly published to the Society, pursuant to the action of the Board were elected to membership.

MEMBERS

McNiff, Gilbert Peters — Miller, Walter Raymond
Toner, Arthur Carling

JUNIORS

Douthett, George Mellon — O'Connor, Jr., Maurice James

Applications of the following gentlemen were received and their names ordered published to the Society. Assignment to the various grades of membership is as follows:

MEMBERS

Benson, Laverne Benson — See, Theodore S.
Morrison, Walter P. — Throm, Joseph H.

JUNIORS

Anderson, John Kenneth — Miller, Walter E.
Reno, Edwin S.

A letter of resignation was received from Lloyd A. Cross and the Secretary was requested to write Mr. Cross advising him that his dues had been remitted during time of active service in the Army.

The President announced the death of Dr. Albert E. Frost who joined the Society in January, 1880, and died May 11, 1917. Dr. Frost was Treasurer of the Society 36 years.

The President requested that a letter be written to Dr. Brashear and Mr. E. B. Taylor asking them to write a memoir of Dr. Frost.

The report of the Secretary showing the financial condition of the Society at close of business March 31, 1917 having been previously audited by the Finance Committee, was approved.

The election of a Treasurer to fill the vacancy caused by the death of Dr. Frost was taken up and on motion, duly seconded and carried unanimously, Mr. A. Stucki was elected Treasurer for the remainder of the year.

The question of auditing the accounts of the Society was taken up and after discussion, the Board authorized Pres. Hoerr to secure an outside accountant to audit the books of the Society to July 1, 1917.

The Board requested the Finance Committee to consider and report at the next meeting of the Board the amount of bond that should be secured for the Secretary and Treasurer of the Society.

Mr. George H. Neilson, Chairman Entertainment Committee, reported that the Committee held but one meeting during the month. There were no inspection trips arranged for, as the two we had in mind for May or June were postponed until Fall at the request of the plant owners. The Committee has arranged for a House Warming on June 15th.

The H. D. James, Chairman of the Membership Committee, suggested that a letter be written to members of the Committee asking them to send in suggestions as to ways and means of securing the interest of new men in the Society, stating that the House Warming could be used as a drawing card.

The question of fire insurance was taken up and referred to the House Committee with power to act.

The President was authorized to appoint a Committee of three to secure and make arrangements for the presentation of a regimental flag to be presented to the 5th Regiment of Engineers, U. S. R., expense not to exceed $300.00. Mr. George H. Neilson was appointed Chairman of this Committee, the other members being George H. Barbour and W. E. Snyder.

The meeting adjourned at 5:45 P. M.

K. F. Treschow, *Acting Secretary.*

BOARD OF DIRECTION

The regular monthly meeting of the Board of Direction of the Engineers' Society of Western Pennsylvania was held in the Society Rooms, Union Arcade Building, Monday, June 4, 1917, at 4:20 P. M., President Alex. L. Hoerr presiding, Messrs. Pittman, Danforth, Duff, Barbour, Neilson, Stucki, James and Snyder being present.

The minutes of the last regular monthly meeting, held May 8, were read and approved.

The applications of the following gentlemen having been regularly published to the Society, pursuant to the action of the Board, were elected to membership.

MEMBERS

McNiff, Gilbert Peters — Miller, Walter Raymond
Toner, Arthur Carling

JUNIORS

Douthett, George Mellon — O'Connor, Jr., Maurice James

Applications of the following gentlemen were received and their names ordered published to the Society. Assignment to the various grades of membership is as follows:

MEMBERS

Benson, Laverne Vere — See, Theodore S.
Morrison, Walter P. — Throm, Joseph H.

JUNIORS

Anderson, John Kenneth — Miller, Walter E.
Reno, Edwin S.

A letter of resignation was received from Lloyd A. Cross, and the Secretary was requested to write Mr. Cross advising him that his dues had been remitted during time of active service in the Army.

The President announced the death of Dr. Albert E. Frost, who joined the Society in January, 1880, and died May 11, 1917. Dr. Frost was Treasurer of the Society 36 years.

The President requested that a letter be written to Dr. Brashear and Mr. E. B. Taylor asking them to write a memoir of Dr. Frost.

The report of the Secretary showing the financial condition of the Society at close of business April 30, 1917, having been previously audited by the Finance Committee, was approved.

The election of a Treasurer to fill the vacancy caused by the death of Dr. Frost was taken up, and on motion, duly seconded and carried unanimously, Mr. A. Stucki was elected Treasurer for the remainder of the year.

The question of auditing the accounts of the Society was taken up and, after discussion, the Board authorized President Hoerr to secure an outside accountant to audit the books of the Society to July 1, 1917.

The Board requested the Finance Committee to consider and report at the next meeting of the Board the amount of bond that should be secured for the Secretary and Treasurer of the Society.

Mr. George H. Neilson, Chairman Entertainment Committee, reported that the Committee held but one meeting during the month. There were no inspection trips arranged for, as the two we had in mind for May and June were postponed until Fall at the request of the plant owners. The Committee has arranged for a House Warming on June 15.

Mr. H. D. James, Chairman of the Membership Committee, suggested that a letter be written to members of the Committee asking them to send in suggestions as to ways and means of securing the interest of new men in the Society, stating that the House Warming could be used as a drawing card.

The question of fire insurance was taken up and referred to the House Committee with power to act.

The President was authorized to appoint a Committee of three to secure and make arrangements for the presentation of a regimental flag to be presented to the Fifth Regiment of Engineers, U. S. R., expense not to exceed $300.00. Mr. George H. Neilson was appointed Chairman of this Committee, the other members being Messrs George H. Barbour and W. E. Snyder.

It was moved and seconded that the office of the Secretary be declared vacant as of July 1st, and President Hoerr notified Mr. Treschow of his election to the office for the unexpired term at a salary of $150.00.

The meeting adjourned at 5:45 P. M.

K. F. Treschow, *Acting Secretary.*

BOARD OF DIRECTION

The regular monthly meeting of the Board of Direction of the Engineers' Society of Western Pennsylvania was held in the Society Rooms, Union Arcade Building, Monday, July 9, at 4:20 P. M., President A. L. Hoerr presiding, Messrs. Snyder, Danforth, Duff, Stucki, Barbour and the Secretary being present.

The minutes of the last regular monthly meeting, held June 4, were read and approved.

The applications of the following gentlemen having been regularly published to the Society, pursuant to the action of the Board, were elected to membership:

MEMBERS

Benson, Laverne Vere
Morrison, Walter P.
See, Theodore S.
Throm, Joseph H.

JUNIORS

Anderson, John Kenneth
Miller, Walter E.
Reno, Edwin S.

The applications of the following gentlemen were received and their names ordered published to the Society. Assignment to the various grades of membership is as follows:

MEMBERS

Berg, Ragnar
Bowling, Wilbur S.
Byrnes, Charles J.
Mackrell, Jr., James Clarence
Sarber, Frank Nelson

JUNIORS

Hagel, Henry
Hugins, Charles Brewster
Lamb, Victor M.
Pool, Gordon Aldridge
Steinmetz, Fred James

The Secretary presented a letter of resignation from W. L. Shaw, who joined the Society April, 1903, and, after discussion, it was ordered accepted.

The Secretary announced the death of Mr. Charles Fitzgerald, who joined the Society January, 1896, and died June 2, 1917.

The Secretary was requested to write Mr. S. L. Tone and Mr. Hermann Laub, asking them to prepare a memoir of Mr. Fitzgerald.

The report of the Secretary showing the financial condition of the Society at the close of business May 31, 1917, having been previously audited by the Finance Committee, was approved.

Mr. Barbour reported that the Finance Committee had gone into the matter of bonding the Secretary and Treasurer with the United States Fidelity & Guarantee Company, who quoted a price of $2.50 per thousand, and after going into the amounts handled by each officer suggested that a $5,000.00 bond be secured for each office. The report was ordered accepted and the Secretary and Treasurer bonded for this amount.

The Secretary read a letter from Mr. H. M. Dermitt, Secretary, Civic Club of Allegheny County, in connection with the raising of Allegheny River bridges. The letter was ordered tabled.

A resolution proposing certain changes in the By-Laws of the Society, duly signed by ten corporate members in accordance with Article IX, Sections 1, 2 and 3 of the By-Laws was presented to the Board.

After discussion, it was moved and carried that the suggested changes be transmitted to the Society with a statement of work done within the past six months, giving details of the work of the Special Committee appointed to go into this matter, and stating that a meeting was called for the purpose of discussing the report of the Committee, at which there was not a quorum present. This statement to go on the next notice sent to members of the Society.

The meeting adojurned at 5:45 P. M.

K. F. Treschow, *Secretary.*

REGULAR MONTHLY MEETING

The 363rd regular meeting of the Engineers' Society of Western Pennsylvania was held in the Society Rooms, Union Arcade Building, Tuesday, September 18, 1917, at 8:18 P. M., President Alex. L. Hoerr presiding, 64 members and visitors being present.

The minutes of the last meeting, held May 29, and the special meeting held June 4, 1917, were read and approved.

The Board of Direction reported the election of four applicants to the grade of Member at the July meeting and five at the September meeting; three to the grade of Junior at the July and five at the September meeting, and the receipt of eleven applications for membership.

President Hoerr announced the appointment of the following Nominating Committee:

Samuel A. Taylor, Chairman

William F. Hall	Albert Kingsbery
Henry D. James	Jesse J. Shuman

Under the head of new business was brought up consideration of certain suggested changes in the By-Laws of the Society, as presented to the Board of Direction with the signature of ten corporate members and by the Board recommended to the Society. As approved or modified by the Society, they will be submitted to letter ballot in accordance with the By-Laws.

After considerable discussion, on motion of Mr. K. H. Talbot, duly seconded and carried, consideration of the matter was laid on the table until the next regular meeting of the Society, when certain suggested additions and changes might be drawn up in proper form.

There being no further business before the Society, the paper of the evening, on "Hydrated Lime and Its Qualifications as a Structural Material," was presented by Mr. Bela Nagy, Chief Engineer, Hydrated Lime Bureau, Pittsburgh, Pa.

Written discussion was presented by: Prof. H. R. Thayer, Asst. Professor Structural Design, Carnegie Institute of Technology; Edward Godfrey, Struct. Engr., Robert W. Hunt & Co., Pittsburgh, Pa.

The ensuing discussion was participated in by: J. A. Ferguson, Secy-Engr., Building Code Committee of Council, Pittsburgh, Pa.; K. H. Talbot, Div. Engr., Inspection & Information Bureau, Universal Portland Cement Co., Pittsburgh, Pa., and the author.

On motion, the meeting adjourned at 10:55 P. M.

K. F. Treschow, *Secretary.*

BOARD OF DIRECTION

The regular monthly meeting of the Board of Direction of the Engineers' Society of Western Pennsylvania was held in the Society Rooms, Union Arcade Building, Monday, September 10, 1917, at 4:25 P. M., President Alex. L. Hoerr presiding, Messrs. Snyder, Barbour, Pittman, James, Duff, Stucki, Neilson and the Secretary being present.

The minutes of the last regular monthly meeting, held July 9, were read and approved.

The applications of the following gentlemen having been regularly published to the Society, pursuant to the action of the Board, were elected to membership:

MEMBERS

Berg, Ragnar
Bowling, Wilbur S.
Byrnes, Charles J.
Mackrell, Jr., James Clarence
Sarber, Frank Nelson

JUNIORS

Hagel, Henry
Hugins, Charles Brewster
Lamb, Victor M.
Pool, Gordon Aldridge
Steinmetz, Fred James

The application of the following gentleman was received and his name ordered published to the Society. Assignment to the following grade of membership:

MEMBER

Poos, John P.

The Secretary presented a letter of resignation from R. H. Danforth, who joined the Society February, 1904, whereupon his resignation was ordered accepted.

The report of the Secretary showing the financial condition of the Society at the close of business June 30, 1917, having been previously audited by the Finance Committee, was approved.

Mr. Neilson, reporting for the Entertainment Committee, advised that a meeting would be held within a week to arrange for a Smoker and also that the Committee had been trying for some time to arrange for several inspection trips, but found it impossible to secure permission to inspect any of the big plants or works at this time.

Mr. James, Chairman of the Membership Committee, reported that no meetings of the Committee had been held during the summer months, but that he had in mind calling a meeting at an early date in order to get a good start on the work for the coming season.

In the absence of Mr. Linton, Chairman of the Publication Committee, the Secretary reported that the program for the ensuing year had been put into tentative shape and that papers had been scheduled up to May, 1918, with a few exceptions.

The matter of delinquent dues was taken up and, after discussion, it was moved and carried that the Chairman of the Finance Committee, with the assistance of the Secretary, go over the list of delinquents and report at the next meeting of the Board, with recommendations as to what action should be taken.

The following letter from Mr. Samuel E. Duff was presented and read and, after discussion, the matter was referred to the Publication Committee, with the request that they look into the matter and report at the next meeting, giving any data they might secure in connection with cost, etc.:

Sept. 10, 1917.

Board of Direction,
Engineers' Society of Western Penna.,
Pittsburgh, Pa.

Gentlemen:

At the September meeting of the Board, when the increased activity of the Society is beginning, I wish to suggest immediate consideration of a more permanent organization for the editing of the Proceedings, obtaining of advertisements, and the addition to the Proceedings of items of personal interest to the members, as has been heretofore suggested.

Many of the Board are aware that for several years I have taken an active interest in the increase of revenue possible from advertisements, and lately have gone so far as to suggest an Editor for the Proceedings, so as to relieve the Secretary of the routine work and insure publication on specified dates.

I have no personal candidate for the Editor's position, but discovered a very promising possibility through a conversation with Mr. Brocklebank, who has been soliciting advertisements for the Proceedings for several years.

I bring this matter up thus formally at this time with the hope that the Board will look into the present situation, discuss possibilities and place in the hands of the Publication Committee, or some other authority, power to act along lines laid down by the Board, without further loss of time.

Yours very truly,
(Signed) SAMUEL E. DUFF.

The meeting adjourned at 5:45 P. M.

K. F. TRESCHOW, *Secretary*.

REGULAR MONTHLY MEETING

The 364th regular meeting of the Engineers' Society of Western Pennsylvania was held in the Society Rooms, Union Arcade Building, Tuesday, October 16, 1917, at 8:15 P. M., Vice President W. E. Snyder presiding in the absence of Mr. Alex. L. Hoerr, President, 60 members and visitors being present.

The minutes of the last regular meeting, held September 18, were read and approved.

The Board of Direction reported the election of one applicant to the grade of Member and the transfer to higher grade of nine members, seven to the grade of Member, one to the grade of Associate Member and one to the grade of Junior.

The matter of amendment to By-Laws held over from last meeting was brought up. Mr. Snyder, not being familiar with the details of the proposed changes, asked Mr. Samuel E. Duff to explain the situation to the Society.

Mr. K. H. Talbot offered a written amendment to the proposed amendments as follows:

"ARTICLE VI, SECTION 4: The following STANDING COMMITTEES shall be appointed for one year: Finance, House, Publication, Entertainment, Membership and Civic Affairs. The Chairmen of each of these Committees shall be chosen from among the members of the Board of Direction, and each Committee shall consist of at least three members, all to be appointed by the President, by and with the advice of the Board of Direction, except that the Publication Committee shall, in addition to the members so appointed, further consist of the Chairmen of each Section of the Society. These Committees shall report to the Board of Direction, and perform their duties under its supervision. They shall neither make expenditures nor contract any obligations for the Society, without the consent of the Board. The Chairman of each Committee shall personally examine and vouch for all bills of his Committee.

"ARTICLE VI, SECTION 10: The Civic Affairs Committee shall be charged with the duty of investigating and reporting upon the relationship of the Engineers' Society of Western Pennsylvania to matters of public interest, and shall take up special subjects assigned to it by the Board of Direction."

A slight modification of Mr. Talbot's amendment was suggested and was accepted by Mr. Talbot and incorporated in his amendment as offered.

On motion of Mr. Linton, duly seconded and carried, it was directed that the amendments as submitted by the ten members and as further added to by Mr. Talbot's amendment be sent out for letter ballot.

No further business coming before the Society, the paper of the evening, on "Wheel Contacts on Rail Heads," was presented by Mr. George H. Barbour, Mechanical Engineer, Pittsburgh, Pa.

Written discussion was presented by: George W. Snyder, Prin. Asst. Engr., Western Penna. Div., Pennsylvania R. R., Pittsburgh, Pa.; G. W. Vaughan, Engr., M. of W., New York Central R. R., New York, N. Y.

The ensuing discussion was participated in by: N. W. Storer, Gen. Engr., Westinghouse Elec. & Mfg. Co., East Pittsburgh, Pa.; A. R. Raymer, Asst. to Chf. Engr., Pittsburgh & Lake Erie R. R., Pittsburgh, Pa.; G. M. Eaton, Elec. Engr., Chg. Railway Engrg. Dept., Westinghouse Elec. & Mfg. Co., East Pittsburgh, Pa.; Samuel E. Duff, Cons. Engr., Pittsburgh, Pa., and the author.

On motion, the meeting adojourned at 10:05 P. M.

K. F. TRESCHOW, *Secretary*.

MECHANICAL SECTION

The regular bi-monthly meeting of the Mechanicl Section of the Engineers' Society of Western Pennsylvania was held in the Society Rooms, Union Arcade Building, October 2, 1917, at 8:05 P. M., Chairman Albert Kingsbury presiding, 89 members and visitors being present.

The minutes of the last meeting held April 3, 1917, were read and approved.

There being no further business coming before the Section, the paper of the evening, on "Modern Condenser Practice," was presented by Mr. Dudley D. Pendleton, Dist. Sales Mgr., Wheeler Condenser & Engineering Co., Pittsburgh, Pa.

The ensuing discussion was participated in by: Mr. Everett F. Clark, Sales Engr., Westinghouse Elec. & Mfg. Co., East Pittsburgh, Pa.; Mr. John N. Chester, Chester & Fleming, Pittsburgh, Pa.; Mr. Paul A. Bancel, George H. Gibson Co., New York, N. Y.; Mr. J. C. Hobbs, Asst. to Supt. Power Stations, Duquesne Light Co., Pittsburgh, Pa.; Mr. C. M. Hardin, Sales Engr., Westinghouse Elec. & Mfg. Co., Pittsburgh, Pa.; Prof. Willibald Trinks, Professor Mechanical Engineering, Carnegie Institute of Technology, Pittsburgh, Pa., and the author.

On motion, the meeting adojourned at 10:55 P. M.

K. F. Treschow, *Secretary*.

BOARD OF DIRECTION

The regular monthly meeting of the Board of Direction of the Engineers' Society of Western Pennsylvania was held in the Society Rooms, Union Arcade Building, Monday, October 1, 1917, at 4:20 P. M., President Alex. L. Hoerr presiding, Messrs. James, Pittman, Neilson, Duff, Stucki, Danforth, Snyder, Linton and the Secretary being present.

The minutes of the last regular monthly meeting, held September 10, were read and approved.

The application of the following gentleman having been regularly published to the Society, pursuant to the action of the Board, was elected to membership:

MEMBER

Poos, John P.

Applications for transfer to a higher grade were received from the following gentlemen, who were thereupon transferred to the following grades:

MEMBERS

Johnson, Carl J.
McClintock, Frank Stockton
Reed, James K.
Hopkins, Lawrence Leonard
Wasson, Theron
McIntire, Thomas Brown
Westbrook, George Harrison

ASSOCIATE MEMBER

Jackson, John Edward

JUNIOR

Stickel, Charles Richard

The matter of changing the day of the Board meeting from the first Monday to the first Tuesday of the month was taken up, and it was moved and carried that the day be changed to Tuesday, as this day seemed to better suit the majority of the members than Monday.

Mr. Neilson, Chairman of the Entertainment Committee, reported that the Committee had held two meetings during the month and had completed arrangements for a Smoker to be held at the Fort Pitt Hotel on Ocober 6. The Committee requested that members of the Board cooperate with the Committee to make this Smoker one of the most successful ever held, as some exceptionally good motion pictures were to be shown, and all attending would be assured an enjoyable evening.

Mr. James, Chairman of the Membership Committee, reported that he had called a meeting of the Committee for Wednesday evening, October 10, in order to get an early start on work for the coming season.

Mr. Danforth, Chairman of the House Committee, was authorized to secure a man to keep the Society Rooms open from 5:30 to 10:30 P. M. every evening in the week except Sunday, cost not to exceed $50.00.

The meeting adjourned at 5:30 P. M.

K. F. Treschow, *Secretary*.

BOARD OF DIRECTION

The regular monthly meeting of the Board of Direction of the Engineers' Society of Western Pennsylvania was held in the Society Rooms, Union Arcade Building, Tuesday afternoon, November 6, 1917, at 4:10 o'clock, President Alex. L. Hoerr presiding, Messrs. Danforth, Mott, Snyder, Duff, Pittman, Neilson, James, Stucki and the Secretary being present.

The minutes of the last regular monthly meeting, held October 1, 1917, were read and approved.

The applications of the following gentlemen were received and their names ordered published to the Society. Assignment to the various grades of membership is as follows:

MEMBERS

Hengstenberg, Paul M. Wilson, John Johnston

JUNIORS

Braverman, Sigmund Robinson, James Wilson

Applications for transfer to a higher grade were received from the following gentlemen, who were thereupon transferred to the following grades:

MEMBERS

Abel, Albert E. Cochran, John S.
Davison, Allen

The Secretary presented letters of resignation from the following gentlemen and, after discussion, they were ordered accepted:

F. W. H. Clay.....Joined October, 1903
H. W. Craver.....Joined June, 1900
S. W. Koenig.....Joined June, 1911
Bernard Lester.....Joined January, 1905

The reports of the Secretary showing the financial condition of the Society at the close of business August 31 and September 30, having been previously audited by the Finance Committee, were approved.

Mr. George H. Neilson, Chairman of the Entertainment Committee, reported that the attendance at the Smoker held at the Fort Pitt Hotel, October 6, was 240; also that arrangements had been completed for an inspection trip through the plant of the American Steel and Wire Company, at Donora, Pa., on November 17. The Committee has one other trip in prospect, but nothing definite has been decided upon as yet.

Mr. Danforth, Chairman of the House Committee, reported that the Committee had completed arrangements with Mr. H. D. Roberts, a student at the University of Pittsburgh, to keep the Society Rooms open from 5:30 P. M. to 10:30 P. M. every evening, except Sunday, beginning November 29. Announcement to this effect has been mailed to the membership.

In the absence of Mr. Barbour, Chairman of the Finance Committee, the Secretary stated that, in accordance with the request of the Board, the Chairman, with the assistance of the Secretary, had gone over the entire list of delinquent members and had written letters to those in arrears to 1914. The Committee recommends to the Board that those owing dues prior to 1914 be dropped without further notice.

This matter was taken up and, after discussion, the Secretary was requested to write these members a letter stating that unless their dues were received before January 1, 1918, they would be dropped from the rolls of the Society, in accordance with the By-Laws.

Report was read from Ernst & Ernst Company, who audited the books of the Society, suggesting certain changes in the method of keeping the official records, and the Chairman of the Finance Committee was requested to call a meeting of his Committee, at which the Treasurer and Secretary should be present, to discuss and make any changes which might improve the present system of keeping accounts.

The following report of the Nominating Committee was presented by Mr. S. A. Taylor, Chairman:

"November 6, 1917.

To the Board of Direction,
Engineers' Society of Western Pennsylvania.

Dear Sirs:

We beg to submit the following unanimous report covering nominations for the several offices in the Society to be filled at this time:

President.....W. E. Snyder
Vice President (2 years) .....W. C. Hawley
Treasurer .....A. Stucki
Directors (2 years)..... { A. N. Diehl
Robert Linton

Respectfully submitted,

NOMINATING COMMITTEE,

William F. Hall, Albert Kingsbury,
Henry D. James, Jesse J. Shuman,
S. A. Taylor, Chairman.

The Nominating Committee desires to thank those members of the Society who took occasion to send in suggestions as to candidates for the several offices to be filled and thereby materially assisted the Committee in its work."

A resolution signed by three members of the Society in regard to the appointment of an engineer on the Public Service Commission of the State of Pennsylvania was read and, after discussion, was ordered filed.

Mr. Mott presented the matter of holding a joint meeting with the Association for the Advancement of Science, who are holding a convention in Pittsburgh from December 28 to January 2. Mr. Mott stated that it had been suggested an excursion or inspection trip be arranged jointly by the Engineers' Society of Western Pennsylvania and the American Association for Saturday afternoon, December 29, it being thought a trip to the glass works at Arnold, Pa., would be of general interest to both organizations.

After discussion, the matter was turned over to the Entertainment Committee with power to act.

The Secretary read a letter from Mr. R. A. Cummings inviting attention of the Board to the matter of the raising of the public bridges across the Allegheny river, in accordance with the requirements of the War Department, work on which is about to be started, suggesting that the Society ask for public competition in awarding the contracts for the work.

After discussion, the letter was ordered filed.

The meeting adjourned at 5:55 P. M.

K. F. Treschow, *Secretary.*

STRUCTURAL SECTION

The regular bi-monthly meeting of the Structural Section of the Engineers' Society of Western Pennsylvania was held in the Society Rooms, Union Arcade Building, Tuesday evening, November 13, 1917, at 8:18 o'clock, Chairman George W. Nichols presiding, 135 members and visitors being present.

The minutes of the last regular meeting, held May 4, 1917, were read and approved.

There being no further business before the Section, the paper of the evening, on "Industrial Housing," was presented by Mr. H. Walter Forster, Gen. Mgr. Independence Bureau, Philadelphia, Pa.

Written discussion was received from: Mr. Robert Linton, Consulting Mining Engineer, Pittsburgh, Pa.

The ensuing discussion was participated in by: Mr. Fred Hubbard, Chf. Civil Engr., Carnegie Steel Co., Youngstown, O.; Mr. L. P. Blum, Blum-Weldin Co., Pittsburgh, Pa.; Mr. P. C. Kuegle, Mgr., Buckeye Land Co., Youngstown Sheet & Tube Co., Youngstown, O.; Mr. Lewis Brandt, Industrial Housing, Pittsburgh, Pa.; Mr. R. L. Wilson, Asst. Gen. Supt., Westinghouse Elec. & Mfg. Co., East Pittsburgh, Pa.; Mr. W. H. Lauman, Asst. Chf. Civil Engr., Carnegie Steel Co., Pittsburgh, Pa.; Mr. J. H. Scoville, Supt., Aberthaw Construction Co., Donora, Pa.; Mr. J. M. Rice, Civil Engr., Morris Knowles, Pittsburgh, Pa.. Mr. K. H. Talbot, Div. Engr., Promotion Bureau, Universal Portland Cement Co., Pittsburgh, Pa.; Mr. E. F. Harris, Mesta Machine Co., Pittsburgh, Pa.; Mr. O. P. Hipple, Div. Engr., Westinghouse Elec. & Mfg. Co., East Pittsburgh, Pa.; Mr. George H. Schwan, Architect, Pittsburgh, Pa.; and the author.

It was moved and carried that a vote of thanks be extended to Mr. Forster for his very interesting and instructive paper.

On motion the meeting adjourned at 10:20 P. M.

K. F. Treschow, *Secretary.*

REGULAR MONTHLY MEETING

The 365th regular monthly meeting of the Engineers' Society of Western Pennsylvania was held in the Society Rooms, Union Arcade Building, Tuesday evening, November 20, 1917, at 8:15 o'clock, President Alex. L. Hoerr presiding, 102 members and visitors being present.

The minutes of the last regular monthly meeting, held October 16, were read and approved.

The Board of Direction reported the transfer of three juniors to the grade of Member; the receipt of four applications for membership.

President Hoerr announced that the result of the ballots cast in connection with the amendment to the By-Laws showed a result of 195 in favor of and 20 against the proposed amendment.

No further business coming before the Society, the paper of the evening, on "Radio Telegraphy and Telephony," was presented by Mr. S. M. Kintner, Gen. Mgr., National Electric Signaling Co., Pittsburgh.

Owing to the shortness of time, the discussion was very informal and the names of the gentlemen discussing them were not taken.

On motion, the meeting adjourned at 10:00 P. M.

K. F. TRESCHOW, *Secretary.*

METALLURGICAL AND MINING SECTION

The regular bi-monthly meeting of the Metallurgical and Mining Section of the Engineers' Society of Western Pennsylvania was held in the Society Rooms, Union Arcade Building, Tuesday evening, November 27, 1917, at 8:25 o'clock, Chairman W. L. Affelder presiding, 45 members and visitors being present.

The minutes of the last meeting, held January 30, 1917, were read and approved.

Mr. F. N. Speller presented a proposed amendment to the By-Laws of the Section as follows:

"November 27, 1917.

To the Metallurgical and Mining Section,
Engineers' Society of Western Penna.

Dear Sirs:

As provided in Article IX of the By-Laws of this Section, we, the undersigned corporate members of the Section, propose the following amendments to the By-Laws:

'Article III. The members of this Section must be *corporate members* of the Engineers' Society of Western Pennsylvania. There shall also be connected with the Section, Junior or Student Junior Members of the Society, who shall be entitled to all the rights and privileges of the Section, except the right to vote and hold office. The enrollment in this Section must be approved by the Board of Direction of the Engineers' Society of Western Pennsylvania.'

Respectfully submitted,

W. L. Affelder,
Richard H. Hice,
James O. Handy,
H. G. Spilsbury,
F. N. Speller."

On motion, the proposed amendment was approved and ordered submitted to the vote of the Section, according to law.

There being no further business, the paper of the evening, on "The Situation Regarding Manganese, Pyrite, Sulphur, Chromium and Potash," was presented by Mr. J. E. Johnson, Jr., Consulting Engineer and Metallurgist, New York City.

Before opening discussion it was moved, seconded and passed unanimously that a vote of thanks be extended to Mr. Johnson for his very excellent paper.

The ensuing discussion was participated in by: Mr. F. N. Speller, Metallurgical Engineer, National Tube Co.; Mr. Chamberlain; Mr. L. E. Riddle, Gen. Supt., City Furnaces, Carnegie Steel Co., Sharpsburg, Pa.; Mr. Darlington, Pittsburgh, Pa.; Mr. James O. Handy, Director of Laboratories, Pittsburgh Testing Laboratory; Mr. Richard Hice, State Geologist of Penna., Beaver, Pa.; and the author.

On motion, duly seconded, the meeting adjourned at 10:13 P. M.

K. F. Treschow, *Secretary.*

BOARD OF DIRECTION.

The regular monthly meeting of the Board of Direction of the Engineers' Society of Western Pennsylvania was held in the Society Rooms, Union Arcade Bldg., Tuesday, December 4, 1917, at 4:20 P. M., Vice President W. E. Snyder presiding in the absence of Mr. Alex. L. Hoerr, President; Messrs. Stucki, Neilson, Duff, Danforth, James, Mott, Pittman and the Secretary being present.

The minutes of the last regular monthly meeting, held November 6, were read and approved.

The applications of the following gentlemen having been regularly published to the Society, pursuant to the action of the Board, were elected to membership:

MEMBERS

Hengstenberg, Paul M. Wilson, John Johnston

JUNIORS

Braverman, Sigmund Robinson, James Wilson

The applications of the following gentlemen were received and their names ordered published to the Society. Assignment to the various grades of membership is as follows:

MEMBERS

Lakey, Arthur B. Marquard, F. F.
Norton, Paul Thornley, Jr.

ASSOCIATE MEMBER

Warwick, William Henry

JUNIOR

Reed, Jean Bissell

The Secretary presented letters of resignation from the following gentlemen and, after discussion, they were ordered accepted:

Azor R. Hunt..... Joined November, 1913
George H. Morse..... Joined January, 1917
A. A. Straub..... Joined February, 1914
Charles W. Supplee ..... Joined February, 1914

The Secretary announced the death of Mr. Ellsworth Dean, who joined the Society March, 1914; also Mr. William Bradford, who joined March, 1893, and died November, 1917.

The report of the Secretary showing the financial condition of the Society at the close of business October 31, having been previously audited by the Finance Committee, was approved.

Mr. Neilson, Chairman of the Entertainment Committee, reported that the Committee had held but one meeting during the month and had arranged for a Smoker Friday evening, December 7, at the Fort Pitt Hotel. He also reported an attendance of 200 on our recent inspection trip through the plant of the American Steel & Wire Company at Donora.

Mr. Neilson suggested that the General Operating Committee of Eastern Railroads, of which Mr. Arthur W. Thompson (a member of the Society) is chairman, be invited to attend the Smoker as guests of the Society, and the Secretary was requested to write Mr. Thompson extending the invitation.

Mr. Danforth, Chairman of the House Committee, reported that the average attendance to date of those using the Society Rooms in the evening was 15 a week, the highest for one evening being six, which was on Saturday night.

Mr. James, Chairman of the Membership Committee, suggested that small informal meetings for the discussion of topics of general interest be held on certain evenings in the Rooms of the Society. After discussion, it was moved and seconded that the matter be taken up with the Publication Committee and, if approved by them, the Membership Committee to be authorized to arrange for a series of such meetings.

In the absence of Mr. Barbour, Chairman of the Finance Committee, Mr. Snyder reported that the Committee held a meeting, at which the Treasurer and Secretary were present, to consider the different suggestions made in a report issued by Ernst & Ernst, Auditors, as to the present system of keeping accounts, and after going into the matter thoroughly, several changes were made, to be effective January 1, 1918.

Mr. Snyder called attention to the matter of the Building Fund, stating that as there was only $586.37 in cash in this fund and one bond, the Finance Committee recommended it be discontinued in view of the fact that it is serving no special purpose under its present title, and this amount be raised to $600.00 and invested in Liberty Bonds; this amount to be transferred to the Permanent Fund, together with the other bond now in the Building Fund.

After discussion, it was moved and carried that the Building Fund be discontinued if not contrary to the By-Laws of the Society, and that the cash and bond be transferred to the Permanent Fund.

In the absence of Mr. Linton, Chairman of the Publication Committee, the Secretary reported that Mr. E. H. McClelland, Technology Librarian of the Pittsburgh Carnegie Library, had been appointed to edit the Proceedings, arrangements as to salary, etc. not having been made as yet, as Mr. McClelland desired to have charge of this work for a month or two in order to obtain an idea as to the amount of time required to handle the work before making a final decision.

The program for the entire year is complete with a few exceptions.

It was suggested that a written report be sent in by the Chairman of each of the Committees for the Board meetings and after discussion, it was moved and carried that the Secretary be requested to secure such a report from each Chairman before the Board meetings.

Mr. Duff introduced the subject of incorporating all minutes, personal items, special committee reports and other matters pertaining to the activities of the Society and its members in a special announcement, to be issued bi-monthly instead of being printed in the back of the Proceedings as is the present custom, the idea being that this information would be read by a greater number of our members if put in this form. It was also thought that this would tend to create a more active interest in the affairs of the Society.

After considerable discussion, the Secretary was requested to write to the Chairman and members of the Publication Committee giving them this information and asking that they look into matter of cost, manner of handling, etc., and report at the next meeting of the Board.

Mr. Snyder read two letters addressed to Mr. Alex. L. Hoerr as President of the Society, one from the American Society of Mechanical Engineers inviting Mr. Hoerr to appoint a delegate from this Society to attend the public hearing for discussion of the Power Test Codes prepared by the A. S. M. E. and the other from Mr. George F. Swain, requesting Mr. Hoerr to sign a letter to be sent to Secretary of War Baker in regard to allowing drafted men to return to their respective schools to continue their work until they are actually needed in the service, so as to avoid a shortage of technically trained men.

Mr. Snyder stated that Mr. Hoerr was attending the A. S. M. E. meeting and would be at the public hearing as a delegate from this Society and that he had sent a letter to Mr. Baker.

Mr. Hoerr's action was unanimously approved by the Board.

Mr. Neilson recommended that we purchase a service flag for the Society and it was moved and carried that Mr. Neilson be authorized to purchase such a flag.

Mr. Stucki presented the matter of raising a fund to be used for members of the Society serving in the Army or Navy, stating that Mr. Lee C. Moore, a member of the Society, had called on him and suggested that such a fund be started at the Smoker to be held Friday evening, Dec. 7.

After discussion, the Secretary was requested to write Mr. Moore stating that this matter was of such importance that it should be brought up at a regular meeting of the Society, rather than at the Smoker.

The meeting adjourned at 6:00 P. M.

K. F. Treschow, *Secretary*.

MECHANICAL SECTION.

The regular bi-monthly meeting of the Mechanical Section of the Engineers' Society of Western Pennsylvania was held in the Society Rooms, Union Arcade Bldg., Dec. 4, 1917 at 8:15 P. M., Chairman Albert Kingsbury presiding, 70 members and visitors being present.

The minutes of the last meeting held Oct. 2, 1917 were read and approved.

The Secretary read proposed amendments to the By Laws of the Section as follows:

To the Mechanical Section
Engineers' Society of Western Penna.

Dear Sirs:

As provided in Article 9 of the By Laws of this Section, we the undersigned corporate members of the Section, propose the following amendments to the By Laws:

Article 2. The object of this Section shall be the advancement of engineering, special studies and researches in the field of Mechanical Engineering, the reading and discussions of papers and topical discussions of subjects relating to these branches of engineering.

Article 3. The members of this Section must be CORPORATE MEMBERS of the Engineers' Society of Western Pennsylvania. There shall also be connected with the Section, Junior or Student Junior Members of the Society, who shall be entitled to all the rights and privileges of the Section, except the right to vote and hold office. The enrollment in this Section must be approved by the Board of Direction of the Engineers' Society of Western Pennsylvania.

Article 4. The officers of the Section shall be a Chairman, a Vice Chairman and five directors, who shall constitute the Executive Committee of the Section. They shall be elected at the annual meeting of the Section, and shall hold office for one year. A majority of the votes cast shall be necessary to elect. The Secretary of the Society shall be Secretary of the Section. The Executive Committee shall arrange programs for all meetings of the Section in conjunction with the Publication Committee of the Society and shall attend the executive business of the Section.

Article 5. Meetings.

a. The regular meetings for presentation and discussion of technical subjects shall be held on the first Tuesday of February, April, June, October and December.

b. The annual meeting shall be held on the same day as the regular meeting in February.

c. Special meetings may be called by the Chairman, or at the written request of five members.

d. Notices of special meetings shall contain a statement of the object for which the meeting is called and no subject not stated in the notice shall be decided at any special meeting.

e. Notices of special meetings shall be mailed to each member at least two days in advance of said meeting.

Ten members shall constitute a quorum at all meetings.

The following order of business shall be observed at the Annual Meeting:

1. Reading of Minutes of the last Annual Meeting.
2. Report of Secretary.
3. Annual Report of the Executive Committee.
4. Reports of Special Committees.
5. Election and announcement of election of officers.
6. Address of retiring Chairman.
7. Adjournment.

The following order of business shall be observed at the regular meetings.

1. Reading of Minutes of last regular meeting and of subsequent special meetings.
2. Report of Executive Committee.
3. Unfinished business.
4. Reports of Committees.
5. New Business.
6. Papers and discussions.
7. Adjournment.

Article 6. Amendments to these By Laws must be proposed in writing by at least five members at a regular meeting and adopted by a two-thirds vote of the members present at a subsequent regular meeting; provided written notice of such amendment be sent to each member with the notice of the meeting.

Respectfully submitted,

J. A. Bode.
E. W. Pittman.
Harry J. Lewis.
R. Wikander.

On motion the proposed amendments to the By Laws were approved and ordered published and balloted on at the next meeting, in accordance with the rules.

No further business coming before the Section, the paper of the evening on "The Manufacture and Use of Die Castings" was presented by Mr. Charles Pack, Chief Chemist and Metallurgist, Doehler Die Casting Co., Brooklyn, N. Y.

Written discussion was presented by Prof. George H. Follows, Professor Machine Design, Carnegie Institute of Technology.

The ensuing discussion was participated in by Mr. J. L. Jones, Metallurgist, Westinghouse Elec. & Mfg. Co., East Pittsburgh, Pa.: Mr. F. L. Egan, Carnegie Steel Co., Pittsburgh, Pa., and the author.

On motion the meeting adjourned at 10:12 P. M.

K. F. TRESCHOW, *Secretary.*

REGULAR MONTHLY MEETING.

The 366th regular monthly meeting of the Engineers' Society of Western Pennsylvania was held in the Society Rooms, Union Arcade Bldg., Tuesday evening, December 18, at 8:15 P. M., President Alex. L. Hoerr presiding, 75 members and visitors being present.

The minutes of the last regular monthly meeting held November 20th, were read and approved.

The Board of Direction reported the election of two applicants to the grade of Member, two to the grade of Junior, and the receipt of five applications for membership.

No other business coming before the Society, the paper of the evening on "The Design and Progress of the Floating-Frame Reduction Gear" was presented by Mr. John H. Macalpine, Pittsburgh, Pa., Member of the Institution of Naval Architects, London.

Written discussion was received from Mr. A. Peterson, Asst. to Chf. Engr., The DeLaval Steam Turbine Co., Trenton, N. J.; Mr. Thomas Fawcus, Fawcus Machine Co., Pittsburgh, Pa.; Mr. Percy C. Day, The Falk Co., Milwaukee, and the author.

On motion the meeting adjourned at 10:55 P. M.

K. F. TRESCHOW, *Secretary.*

BOARD OF DIRECTION

The regular monthly meeting of the Board of Direction of the Engineers' Society of Western Pennsylvania was held in the Society Rooms, Union Arcade Bldg., Tuesday, January 8, 1918, at 4:20 P. M., President Alex. L. Hoerr presiding, Messrs. Barbour, Neilson, Linton, Snyder, Danforth, Pittman, Duff, James and the Secretary being present.

The minutes of the last regular meeting, held December 4, were read and approved.

The applications of the following gentlemen, having been regularly published to the Society, pursuant to the action of the Board, were duly elected to membership:

MEMBERS

Lakey, Arthur B. Marquard, F. F.
Norton, Paul Thornley, Jr.

ASSOCIATE MEMBER

Warwick, William Henry

JUNIOR

Reed, Jean Bissell

The applications of the following gentlemen were received and their names ordered published to the Society. Assignment to the various grades of membership is as follows:

MEMBERS

Martin, John Dickerson Ottinger, Harry
Norris, William H. Rogers, Frederick Drummond
Shultz, Frank Walter

ASSOCIATE MEMBER

Dodds, Leonidas Louis

JUNIORS

Pugh, George Arthur Spencer, Herbert Lincoln

Application for transfer to higher grade was received from Alex. Hardie, who was thereupon transferred to the grade of member.

The Secretary presented letters of resignation from the following gentlemen, and after discussion, they were ordered accepted:

John S. Albert	Joined November,	1913
E. F. Bradt	Joined April,	1913
Gregory M. Dexter	Joined May,	1915
C. P. Linville	Joined June,	1912
G. W. Snyder	Joined December,	1916

The Secretary read a letter from Mr. W. A. Moore, who has been a member of the Society since 1904, stating that he was in arrears for dues for the past three years and asking whether it would not be possible to make a small payment and still hold his membership in the Society. The Secretary was requested to write Mr. Moore to the effect that, in view of his long-continued membership, the Board had remitted all dues prior to 1918.

The Secretary announced the death of Mr. J. W. Cordes, who joined the Society, October, 1903, and Mr. C. S. Foller, who joined March, 1905.

The report of the Secretary showing the financial condition of the Society at the close of business November 30, having been previously audited by the Finance Committee, was approved.

Mr. Neilson, Chairman of the Entertainment Committee, presented the following report:

During the past year your committee arranged the following inspection trips and entertainments:

INSPECTION TRIPS

November 17—To the American Steel & Wire Co., Donora, Pa., to inspect their new Industrial Housing Development near Donora and their new Duplexing Department at their Bessemer Plant. Attendance, 200.

SMOKERS

January 20—Held at Fort Pitt Hotel. Attendance, 260.
October 6—Patriotic Smoker held at Fort Pitt Hotel. Attendance, 240.
December 7—Smoker, Fort Pitt Hotel. Attendance, 95.

PRESENTATION OF REGIMENTAL COLORS TO 15TH U. S. ENGINEERS

July 2—Regimental flag was presented to Colonel Edgar Jadwin for the 15th U. S. Engineers at Oakmont, Pa. Regimental color was later forwarded to Colonel Jadwin at Oakmont and lost in transit. It was returned to the manufacturer, who changed the insignia to "15th U. S. Engineers," and forwarded to Colonel Jadwin in France, December 11.

HOUSEWARMING

June 15—Housewarming held on removal to our new quarters in Union Arcade Bldg. Attendance, 300.

The annual banquet was not held this year on account of conditions at this time.

Respectfully submitted,

George H. Neilson, *Chairman.*

Mr. Barbour, Chairman of the Finance Committee, reported that the finances of the Society were in good condition and that all money owed to the Reserve and Permanent Funds would be paid to December 31, 1917.

Mr. Danforth, Chairman of the House Committee, reports that the rooms have been kept in good condition and the necessary alterations, due to moving from the Oliver Bldg. to the present quarters of the Union Arcade Bldg., have been made.

The fire insurance on the Society's property was considered too low in amount and this has been doubled, bringing it to $2,000.00. The chairs and tables have been refinished so as to present a better appearance.

Two matters that have been the subject of considerable discussion for some years past have been taken up and made effective, namely, the procuring of some popular literature for the Reading Room, which seems appreciated, and the amount of this literature could probably be increased to advantage. The other change that has been made consists in keeping the rooms open in the evenings. They are now open until 10:30 at night, and while the evening attendance is not as great as might be expected, nevertheless, it is sufficient to warrant the continuance of this practice, as it seems likely that the use of the rooms in the evenings will increase.

Mr. James, Chairman of the Membership Committee, reported the election of 113 new members to the Society. During the same period 48 members have been lost, by resignation and death, which leaves a net increase of 65 members added to the Society during the past year.

The Membership Committee has experienced a great deal of difficulty in interesting new members in the Society at the present time. Since war was declared many men have joined the military organization, and many of the others are so actively engaged in furnishing supplies, either directly or indirectly, to the military organization, that it is difficult to secure their interest at this time.

The Society is doing a splendid work and should receive the support of all engineers in this vicinity, particularly at this time, when co-operation in engineering work is essential. The Chairman, therefore, urges the Board of Direction to use every effort possible to assist the Committee in maintaining our membership up to its present standard during these very trying times.

The Secretary, in the absence of Mr. Linton, read the report of the Publication Committee, as follows:

During the year four meetings of the Committee were held, with an average attendance of seven.

Papers read at the general meetings of the Society..... 8

Papers read at the meetings of the various Sections..... 10

Two lectures presented.

Of these, eighteen papers have been published in the Proceedings of the Society or will appear in later issues.

In November, Mr. E. H. McClelland, Technology Librarian, Pittsburgh Carnegie Library, was engaged to edit the Proceedings, and now has this work in charge.

Arrangements have been made to issue a bi-monthly bulletin to be added to the notices of meetings sent out. These bulletins will contain personal and news items, abstracts of committee reports, digest of minutes of Board of Direction and such other items as will be of special interest to members of the Society.

It is believed that, with sufficient co-operation on the part of the members in the way of contributing news items, such a bulletin will prove to be very interesting to the members.

It was moved and seconded that the recommendations of the Publication Committee be accepted.

Mr. Danforth read a letter from Mr. C. M. Reppert, Secretary-Treasurer, Pittsburgh Section, A. S. C. E., inquiring as to whether it would be possible for the Pittsburgh Section to hold meetings in the Auditorium used by the Society.

It was moved and seconded that Mr. Danforth be instructed to notify Mr. Reppert that the Engineers' Society has no authority to rent the Auditorium, as according to its lease it is only allowed the use of the Auditorium a certain number of evenings during the year, and to suggest that the matter be taken up with Mr. Kinch, Superintendent of the Building.

On motion, the meeting adjourned at 5:45 P. M.

K. F. Treschow, *Secretary.*

STRUCTURAL SECTION

The regular bi-monthly meeting of the Structural Section of the Engineers' Society of Western Pennsylvania was held in the Society Rooms, Union Arcade Bldg., Tuesday evening, January 8, 1918, at 9:00 P. M., Chairman George W. Nichols presiding, 103 members and visitors being present.

The minutes of the last meeting, held November 13, were read and approved.

The Secretary read certain proposed amendments to the By-Laws of the Section, duly signed by three corporate members of the Section in accordance with the By-Laws.

This amendment simply refers to the Section By-Laws and is for the purpose of bringing them into accord with the changes made in the Society By-Laws.

It was moved and carried that the amendments be accepted and published to the Society, final action to be taken at the next meeting, to be held March 5, in accordance with the By-Laws.

The Secretary read a cablegram from Major Hiles as follows:

To the Members of the Engineers' Society:

Wishing you all a Happy Christmas and a Bright New Year. I hope to greet you all face to face in the days to come after our work is finished.

(Signed) ELMER K. HILES.

No further business coming before the Section, the topic of the evening, "The Flat Slab System," was discussed.

Written discussion was presented by: Mr. C. A. P. Turner, Consulting Engineer, Minneapolis, Minn.; Mr. A. E. Lindau, General Mgr. Sales, Corrugated Bar Co., Buffalo, N. Y.; Mr. T. L. Condron, Consulting Engineer, Chicago, Ill.; Mr. Edward Godfrey, Struct. Engr., Robt. W. Hunt Co., Pittsburgh, Pa.

It was moved and carried that a vote of thanks be extended to Mr. Turner, Mr. Lindau and Mr. Condron for their very interesting and instructive discussion of the subject. This should be extended to Mr. Godfrey, but the rules of the Society do not permit it.

On motion, the meeting adjourned at 11:15 P. M.

K. F. TRESCHOW, *Secretary.*

METALLURGICAL AND MINING SECTION

The regular bi-monthly meeting of the Metallurgical and Mining Section of the Society was held in the Society Rooms, Union Arcade Bldg., Tuesday, January 29, 1918, at 8:40 P. M., Chairman W. L. Affelder presiding in the absence of the new Chairman and Vice Chairman, 101 members and visitors being present.

The minutes of the last regular meeting, held November 27, 1917, were read and approved.

On motion, the amendment to the By-Laws of the Section, which was presented at a previous meeting and ordered sent to all corporate members of the Society, was adopted.

No further business coming before the Section, the paper of the evening, on "Pulverized Coal in Metallurgical Furnaces as a Substitute for Natural Gas," was presented by Mr. W. O. Renkin, Mgr. Engineering Dept., Quigley Furnace Specialties Co., New York City.

Written discussion was presented by: Mr. W. E. Snyder, Mech. Engr., American Steel & Wire Co.

The ensuing discussion was participated in by: Mr. W. L. Affelder, Gen. Mgr. Coal and Coke Subsidiaries of J. H. Hillman & Co., Pittsburgh, Pa.; Mr. A. E. Crockett, Forging Engr., Jones & Laughlin Steel Co.; Mr. George H. Danforth, Struct. Engr., Jones & Laughlin Steel Co.; Mr. J. W. Paul, Chief, Coal Mines Investigations, U. S. Bureau of Mines, Pittsburgh, Pa.; Mr. W. W. Frazier, Asst. Chf. Engr., A. M. Byers Company; Mr. C. E. Frazier, Chf. Engr., Hazel-Atlas Glass Co., Washington, Pa.; Mr. G. G. Oliver, Gen. Mgr., Hazel-Atlas Glass Co., Washington, Pa.; Mr. John A. Hunter, Steam and Sanitary Engr., American Sheet & Tin Plate Co., Pittsburgh, Pa.; Mr. W. H. Fitch, Mgr., Metallurgical Dept., Fuller Engineering Co., Pittsburgh, Pa.; Mr. E. D. Stearns, Partner, Ft. Pitt Engineering Co., Pittsburgh, Pa.; Benj. Schwartz, Asst. Eff. Engr., Heppenstall Forge & Knife Co., Pittsburgh, Pa.; and the author.

On motion, the meeting adjourned at 10:30 P. M.

K. F. Treschow, *Secretary.*

SPECIAL MEETING

A special meeting of the Engineers' Society of Western Pennsylvania was held in the Society Rooms, Union Arcade Bldg., Tuesday, January 22, 1918, at 8:15 P. M., President W. E. Snyder presiding, 64 members and visitors being present.

The paper of the evening, on "Will the Lake Erie and Ohio River Canal, if Built, Be an Economic Success?" was presented by Mr. W. G. Wilkins, of the W. G. Wilkins Co., Pittsburgh, Pa.

Written discussion was received from: Mr. Lee C. Moore, Pres., Lee C. Moore Co., Pittsburgh, Pa.

The ensuing discussion was participated in by: Mr. E. K. Morse, Consulting Engineer, Pittsburgh, Pa.; and the author.

On motion, the meeting adjourned at 10:23 P. M.

K. F. Treschow, *Secretary.*

HONOR ROLL OF THE SOCIETY

This list is known to be incomplete, and it will be greatly appreciated if members will send to the Secretary the names of those members now serving in any branch of the Army or Navy not appearing on this list.

Reamer W. Argo
George B. Barr
F. G. Clapp
W. C. Coryell
H. C. Cronemeyer
Edward E. Duff, Jr.
Levi Bird Duff
Frank Garratt
T. J. Gillespie, Jr.
J. W. W. Hallock
F. W. Heisley
S. G. Hibben
W. A. Hislop
Elmer K. Hiles
Henry Hukill
C. J. Johnson
Strickland Kneass
J. P. Leaf
Charles C. Lynde
F. S. McClintock
Carter C. MacMillan
Philip W. Price
Harry A. Rapelye
Milnor Roberts
E. R. St. John
T. H. Schoepf
Charles B. Stanton
J. K. Stotz

Proceedings of

The Engineers' Society of Western Pennsylvania

Vol. 33 February, 1917 No. 1

INCORPORATED 1880

PAGE

THE WINDOW GLASS MACHINE 1
By ROBERT LINTON

HISTORIC FAILURES OF MASONRY STRUCTURES 31
By HORACE R. THAYER

APPENDIX

MINUTES OF MEETING .....
ALPHABETICAL ADVERTISING INDEX .....
CLASSIFIED ADVERTISING INDEX .....

OFFICERS FOR 1917

PRESIDENT

ALEX. L. HOERR

VICE PRESIDENTS

W. E. SNYDER

GEORGE H. NEILSON

SECRETARY

ELMER K. HILES

TREASURER

ALBERT E. FROST

DIRECTORS

GEORGE H. DANFORTH ROBERT LINTON	TERM EXPIRES 1918
HENRY D. JAMES WILLIAM E. MOTT	TERM EXPIRES 1919
GEORGE H. BARBOUR ERNEST W. PITTMAN	TERM EXPIRES 1920
A. STUCKI SAMUEL E. DUFF	JUNIOR PAST PRESIDENTS

MECHANICAL SECTION

H. A. RAPELYE, *Chairman*

ALBERT KINGSBURY, *Vice Chairman*

Directors F. I. ELLIS, J. A. HUNTER, WILLIBALD TRINKS

METALLURGICAL AND MINING SECTION

W. L. AFFELDER, *Chairman*

FRANK N. SPELLER, *Vice Chairman*

Directors ROBERT LINTON, H. H. RANKIN, F. A. McDONALD, G. L. NORRIS, H. C. PORTER

STRUCTURAL SECTION

GEORGE W. NICHOLS, *Chairman*

R. A. PENDERGRASS, *Vice Chairman*

Directors W. W. HENDRIX, E. V. BRADEN, A. F. GORDON

COMMITTEES FOR 1917

ENTERTAINMENT COMMITTEE

GEORGE H. NEILSON, *Chairman*

G. M. BAKER
G. G. COOLIDGE
THOMAS E. DOYLE
HUGH N. PENDLETON
PAUL S. WHITMAN
BRENT WILEY

FINANCE COMMITTEE

GEORGE H. BARBOUR, *Chairman*

ROBERT LINTON
W. E. SNYDER

HOUSE COMMITTEE

GEORGE H. DANFORTH, *Chairman*

J. F. KUNTZ
N. S. SPRAGUE

PUBLICATION COMMITTEE

WILLIAM E. MOTT, *Chairman*

W. L. AFFELDER
H. A. RAPELYE
GEORGE W. NICHOLS

ONE HUNDRED FOOT STANDARD

LOUIS P. BLUM, *Chairman*

J. G. CHALFANT
N. S. SPRAGUE
S. H. STUPAKOFF

MEMBERSHIP COMMITTEE

H. D. JAMES, *Chairman*

J. TONER BARR
E. V. BRADEN
G. W. CASE
THOS. FLEMING, JR.
A. F. GORDON
PAUL HAY
W. W. HENDRIX
J. C. HOBBS
G. M. KEEFER
W. L. KELLER
A. C. KNICKERBOCKER
G. M. LEHMAN
HARRY J. LEWIS
CARL W. LITTLER
EUGENE LOMBARD

ELMER K. HILES, *Vice Chairman*

J. A. McEWEN
C. L. McKENZIE
A. D. NEELD
R. A. PENDERGRASS
EARL QUERBACH
J. M. RAYBURN
C. M. REPPERT
G. B. SHIPLEY
A. E. SORTORE
C. B. STANTON
J. D. STEVENSON
K. H. TALBOT
HORACE R. THAYER
T. J. WILKERSON

PROCEEDINGS OF THE

Engineers' Society of Western Pennsylvania

INCORPORATED 1880

Edited by the Secretary under the direction of the Publication Committee.
Published Monthly except August and September.

Reprints from this publication, which is copyrighted, may be made by any other publication on condition that the full title of paper, name of author, page reference, and date of presentation to the Society are given.

No paper read before the Society shall be published in any magazine or journal before its appearance in the Proceedings, and no paper previously published shall be published in the Proceedings without authority from the Publication Committee.

All papers, upon their acceptance by the Publication Committee, become the property of the Society, and it lies within the discretion of the Committee to publish them in whole or in part. This will always be done, if possible, with the approval of the author.

The Society, however, does not hold itself responsible for opinions expressed by its members.

The Society will mail monthly, except August and September, to correspondents and advertisers, postage prepaid, a copy of the Proceedings; each one containing the minutes of and the papers read at the regular meeting and meetings of the Mechanical, Metallurgical and Mining, and Structural Sections.

The Proceedings are for sale at the following prices:
1 to 10 copies, 50c apiece.
10 to 50 copies, 35c apiece.

The author of a paper is entitled to 25 copies of the number containing his paper. He may also have any additional number he desires at ten cents each, **provided they are ordered before going to press.**

Subscription price, $5.00 per annum. To colleges and public libraries who agree to bind and catalogue, subscription price is $2.00 per annum.

Back numbers that are becoming scarce are higher. Prices will be quoted by the Secretary.

Back volumes are for sale at the following prices: Volumes 1, 5, 6, 7, 8, 9, 10, 11, 12, 13, 14, 15, and 16, prices on application.

Volumes 17, 18, 19, 20, 21, 22, 23, 24, 25, 26, 27, 28, 29 and 30 ready for binding, $5.00; cloth bound, $5.75.

Volumes 2, 3 and 4 cannot be furnished.

ADVERTISING RATES ARE REASONABLE—WILL BE QUOTED ON APPLICATION

ALPHABETICAL ADVERTISING INDEX.

Alpha Portland Cement Co.....23
Assoc of Engineering Societies.....25
Atlas Portland Cement Co.....23

Damascus Bronze Company.....3d cover
Diamond National Bank.....10
Diescher, S. & Sons..... 8
Dravo-Doyle Company.....17
Duff, Samuel E..... 8

Elliott, B. K.....24
Engineering-Contracting.....21

Fohl, W. E..... 8
Fort Pitt Hotel.....10

Gibb Instrument Co.....22
Green Engineering Co.....26
Gulick-Henderson Co..... 9

Hagan, Geo. J..... 8
Homestead Valve Mfg. Co.....12
Hunt & Co., Robt. W..... 9

Iron City Sand Co.....21

Jeffrey Mfg. Co.....19
Johnston, Jas. H.....26
Jones & Laughlin Steel Co.....20

Kay, Totten & Powell..... 8
Kennedy Co., D. J.....23
Kennedy, Julian..... 9
Kier Fire Brick Co.....21
Kratzer, W. N. & Co.....12

Lufkin Rule Co.....24

McClure, Son & Co., G. W..... 9
McConway & Torley.....4th cover
Mackintosh, Hemphill & Co.....13
Macfarren, Walter W..... 8
Mesta Machine Co.....13
Metallurgical & Chem. Engrg.....25
Morse Twist Drill & Mach. Co.....20

National Meter Co.....17
Norwich University.....25

Phillips Mine & Mill Supply Co.....19
Phoenix Roll Works.....15
Pittsburgh Construction Co.....12
Pittsburgh Des-Moines Steel Co.....3d cover
Pittsburgh Meter Co.....17
Pittsburgh Piping & Equip. Co..... 9
Pittsburgh Testing Laboratory..... 8
Pittsburgh Valve Foundry & Construction Co... 9

Rawsthorne Engraving Co., Robt.....24
Rodgers Sand Co.....21

Scaife & Sons Co., Wm. B.....17
Schellenberg, F. Z..... 8
Seaman, Sleeth Co.....15
Smith, L. C. & Bros.....22
Somers, Fitler & Todd Co.....15
Stahl, K. F..... 8
Stupakoff Laboratories..... 9

Taylor-Wilson Mfg. Co.....15
Thomas, George P..... 8

Union Spring & Mfg. Co.....15
Universal Portland Cement Co.....back cover
University of Pittsburgh.....25

Westinghouse Elec. & Mfg. Co.....12
Wile Electric Furnace Co.....20
Wilkins Co., W. G..... 8
W t Frederick W..... 8

For Classified List of Advertisers see pages 14, 16, 18 of Advertising Section.

LIST OF PERIODICALS

ON THE TABLES IN THE READING ROOM OF THE SOCIETY

Academy of Natural Science, Proceedings
American Institute of Electrical Engineers, Proceedings
American Institute of Mining Engineers, Bulletin
American Iron & Steel Institute, Bulletin
American Society of Civil Engineers, Proceedings
American Society of Mechanical Engineers, Proceedings
American Society of Naval Engineers, Journal
American Water Works Association, Bulletin
American Railway Engineering and Maintenance of Way Association, Bulletin
Association of Engineering Societies, Journal of the
Annales de L'Association des Ingenieurs de Grand
Annaes Scientificos de Academia Polytechnia Porto
Anales de la Sociedad Cientifica Argentina

Blast Furnace and Steel Plant, The
Boston Society of Civil Engineers, Journal.

Chamber of Mines, Monthly Journal
Chemical News
Cleveland Engineering Society, Journal
Coal and Coke Operator
Coal Trade Bulletin
Cold Storage and Ice Trade Journal
Colliery Engineer, The
Compressed Air
Concrete
Concrete Institute, Transactions
Contractor, The
Cornell Civil Engineer

Electric Journal
Electric Railway Journal
Electrical Review
Electrical World
Engineering
Engineering Magazine
Engineering & Mining Journal
Engineering News
Engineering Record
Engineering—Contracting
Engineers Club of Dayton, Proceedings
Engineers' Club of Philadelphia, Proceedings
Engineers' Society of Pennsylvania, Journal
Engineering Journal, Canada
Engineering Digest

Fire & Water Engineering
Foundry
Franklin Institute, Journal of the
Fuel Oil Journal

Gas Industry
General Electric Review

Harvard Engineering Journal
Heating & Ventilating Magazine

Ice and Refrigeration
Industrial Engineering

Industrial & Engineering Chemistry, Journal of
Industrial Magazine
Industrial World
Institution of Mechanical Engineers, Journal of the
Institution of Mining Engineers, Transactions of the
Iowa Engineering Society, Proceedings
Iron Age
Iron & Coal Trades Review
Iron Trade Review
Isolated Plant.

Kansas Engineering Society, Proceedings

Les Mois Scientifique et Industrial
Leslie's Weekly

Maschinen Kronstrukteur
Mechanical World
Metal Worker
Metallurgical & Chemical Engineering
Mexican Mining Journal, The
Municipal Engineering

National Engineer
Natural Gas Journal
New England Water Works Association, Journal

Official Gazette U. S. Patent Office (Washington)
Official Journal, Patents (London)
Outlook

Popular Electricity & Modern Mechanics
Popular Science Monthly
Power
Professional Memoirs
Practical Engineer

Railway Age Gazette
Railway Club of Pittsburgh, Proceedings
Railway Engineering
Railway Review
Review of Reviews
Refrigerating World
Revista de Construciones Y Agrimensura
Revista de Obras Publicas E Minas
Revue de L'Igenieur et Index Technique
Royal Society of Arts, Journal

Safety Engineering
Scientific American
School of Mines Quarterly
Scientific American Supplement
Sibley Journal of Engineering
Society of Chemical Industry, Journal of the
St. Louis Railway Club
Steel & Iron

Technical Index
Technical Literature
Technologist
Technology Quarterly
Technology Review
Teknisk Tidskrt
Transactions of the Liverpool Eng. Society

United States Artillery, Journal of the
University of Illinois Bulletin

Western Society of Engineers, Journal of the
Western Railway Club

Zeitschrift des Vereines Deutscher Ingenieure

Space in the Proceedings will be given to members desiring information of an engineering nature.

Members can have their Proceedings bound at $1.00 per volume. Send your unbound volumes to the Secretary.

K. F. STAHL, Consulting Chemist
Sodium-silicofluoride from gases of acid phosphate plants
Acids in pickling metals or etching glass
Utilization or recovery of waste products.
57th St. & A. V. Ry. PITTSBURGH, PA.

S. DIESCHER & SONS
Consulting, Mechanical and Civil Engineers
IRON AND STEEL WORKS AND GENERAL MANUFACTURING PLANTS
1503-4-5-6 Farmers Bank Building, Pittsburgh, Pa.

THE W. G. WILKINS COMPANY
ENGINEERS AND ARCHITECTS
Westinghouse Building, Pittsburgh, Pa.
Wm. Glyde Wilkins, Mem. Am. Soc., C. E.
Jos. F. Kuntz, Architect
Wilber M. Judd, Mem. Soc., C. E.

Telephone Highland 468-W
Francis Z. Schellenberg, C. E.
Consulting Engineer
Railroads—Mines—Coal Lands
Address, 5746 Howe St., Pittsburgh, Pa.

PITTSBURGH Testing Laboratory
Inspecting and Metallurgical Engineers and Chemists
Seventh and Bedford Aves. Pittsburgh, Pa.

SAMUEL E. DUFF
Consulting Engineer
Designing, Superintendence, Inspection, Examinations and Reports on Manufacturing Plants for purposes of extension or rearrangement to secure economy of operation.
EMPIRE BUILDING, PITTSBURGH, Pa.

W. E. FOHL
Consulting Engineer
Farmers Bank Building, Pittsburgh, Pa.
Financial, Development and Operating Reports on Coal and Coke properties

FREDERICK W. WINTER
Counselor at Law
Patent, Trade-Mark and Copyright Causes
1344 Oliver Building, Pittsburgh

GEORGE P. THOMAS
STANDARD BRIDGE TOOL COMPANY
Thomas Spacing Tables and Punching Machinery. Steel Car Shops, Bridge Shops and Boiler Shops a Speciality.
Bessemer Building, Pittsburgh, Pa.

KAY, TOTTEN & POWELL
Counselors at Law
Patents and Patent Causes
1359-62 Frick Building Annex, Pittsburgh, Pa

Bell Court 2322
GEO. J. HAGAN CO.
STOKER FIRED FURNACES
Save 20% to 75% cost of fuel. 700 in operation
Peoples Bank Bldg., Pittsburgh, Pa.

WALTER W. MACFARREN
Mechanical Engineer
And Solicitor of Patents
Bessemer Building Pittsburgh, Pa.
Designer of Special Machinery

PYROMETERS

TALK PRICE—WE CANNOT COMPETE
TALK QUALITY—WE HAVE NO COMPETITION

The Stupakoff Laboratories PITTSBURGH, PENNA.

JULIAN KENNEDY
ENGINEER

Cable Address
ENGINEER, Pittsburgh

PITTSBURGH, PA., U. S. A.

PITTSBURGH PIPING AND EQUIPMENT CO.
Piping Engineers and Contractors
Complete Piping Installations for Power Plants of all kinds
Office and Works, 35th, Charlotte and Smallman Sts., PITTSBURGH, PA.
Boston Cleveland Chicago Birmingham San Francisco

PITTSBURGH VALVE, FOUNDRY & CONSTRUCTION CO.
Engineers, Founders, Pipe Fitters and Machinists
Complete Erection of Piping a Specialty. Estimates Cheerfully Furnished
Office and Works, 26th Street and A. V. R. R. PITTSBURGH, PA.

ROBERT W. HUNT & CO.
Bureau of Inspection, Tests and Consultation
NEW YORK CHICAGO PITTSBURGH
—INSPECTION OF—
Rails and Fastenings, Electrical Equipments, Cars, Locomotives, Pipes, Machinery, Etc.
Bridges, Buildings and other Structures
Chemical and Physical Laboratories. Reports and Estimates on Properties and Processes.

. W. McCLURE, SON & CO.
ENGINEERS AND CONTRACTORS
Fire Brick Hot Blast Stoves
Blast Furnace Construction,
Open Hearth and Heating Furnaces
BESSEMER BUILDING, PITTSBURGH, PA.

GULICK-HENDERSON CO.
Inspecting and Testing Engineers
Physical and Chemical Laboratories
439 Third Ave., Pittsburgh
Chicago New York

DIAMOND NATIONAL BANK

PITTSBURGH

Because of location, equipment, personnel and resources, this bank is prepared to extend a service better than the best in handling your personal or business account.

Fifth and Liberty Aves.

TOTAL ASSETS OVER
$13,000,000.00

Fort Pitt Hotel

Penn Avenue and Tenth Street

Pittsburgh, Pa.

C. A. Blanchard - Manager

Westinghouse Electric & Mfg. Co.

EVERYTHING ELECTRIC

Address Nearest District Office for Information

Atlanta, Baltimore, Boston, Buffalo, Chicago, Cincinnati, Denver, Detroit, Kansas City, Los Angeles, New Orleans, New York, Philadelphia, Pittsburgh, St. Louis, Salt Lake City, San Francisco, Seattle

Westinghouse Elec. & Mfg., Co. Ltd., Dallas and El Paso, Tex.

Canada: Canadian Westinghouse Co. Ltd., Hamilton, Ont.

Mexico: Compania Ingeniera, Imdortadora y Contratista, S. A., Successors to G. & O. Braniff Company, City of Mexico

FOR HIGH PRESSURE AND EXACTING SFRVICE THE

HOMESTEAD VALVE

Is unequaled. The patent construction of this valve prevents leakage and insures ease and speed of operation.

Made in Straightway, Threeway and Fourway patterns for high and low pressures.

Our booklet tells why it has the above advantages and will be sent on request.

HOMESTEAD VALVE MFG. CO.

Works, Homestead — P. O. Box 1754, Pittsburgh, Pa.

PITTSBURG CONSTRUCTION COMPANY

Diamond Bank Building, PITTSBURGH,

Coal Tipples, Trestle Work, Grading, Masonry

MILL BUILDINGS—Constructed of Brick, Wood, Stone, Concrete and Steel

W. N. KRATZER & COMPANY, MANUFACTURERS

Structural Steel Work

Mill Buildings, Steel and Concrete Construction

Beams, Channels, Angles, etc. in stock for Rush Orders

3212 to 3230 Smallman Street, Pittsburgh, Pa.

REDUCE THE LABOR IN YOUR PICKLING DEPARTMENT

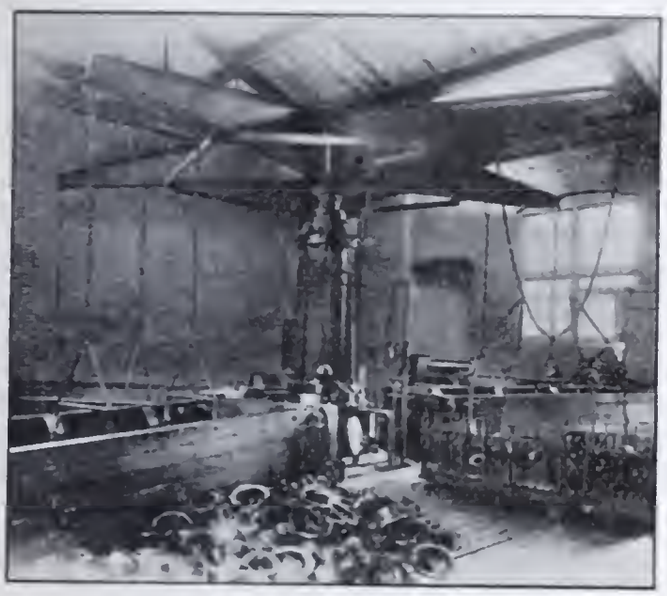

MESTA PICKLING MACHINES eliminate the need of a large number of men in the pickling plant. The only labor necessary is the force of unskilled men required to load and unload the crates which hold the material being pickled. No skilled labor or cranes are needed.

NOT ONLY does the machine reduce labor costs; but by its thorough agitation of both acid and material, it reduces the time required for pickling, the acid consumption, and the amount of material wasted. The product is thoroughly pickled and free from streaks and spots.

These Machines are being used with uniform success in pickling a great variety of Forged, Rolled, Stamped and Cast Metal Products.

WRITE FOR BULLETIN "M"

MESTA MACHINE COMPANY
PITTSBURGH, PA., U. S. A.

MACKINTOSH, HEMPHILL & COMPANY
FORT PITT FOUNDRY

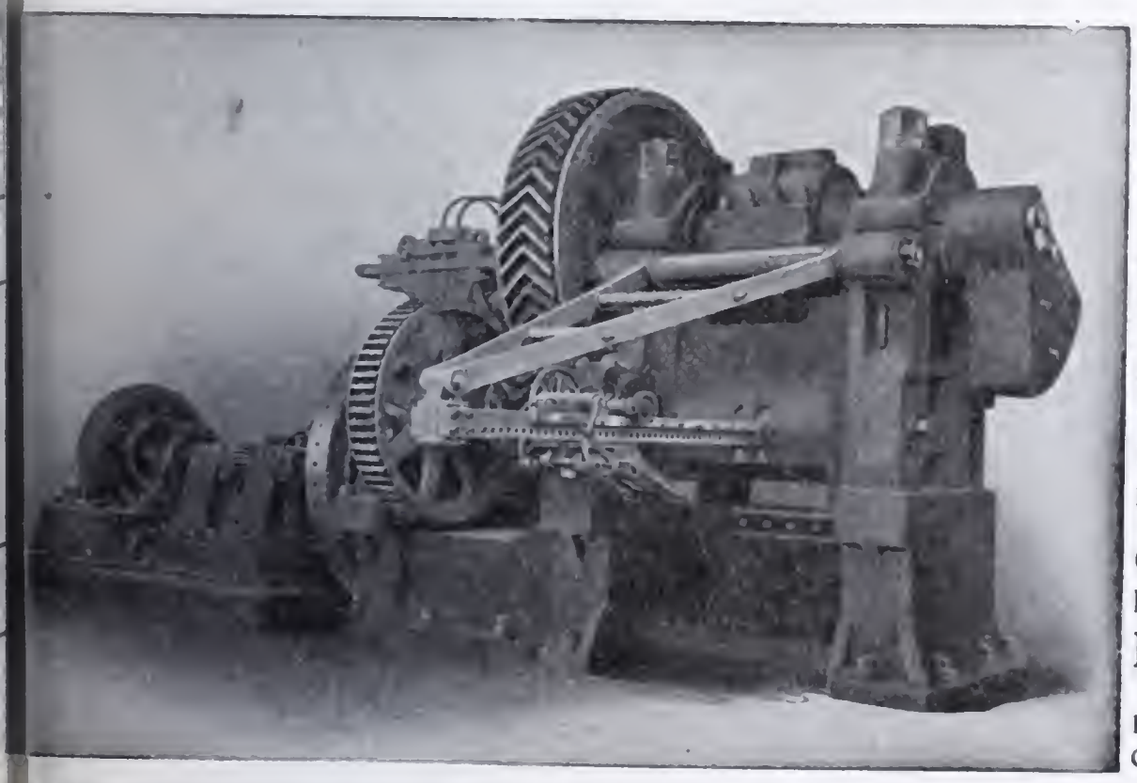

Twelfth and Etna Streets, Pittsburgh, Pa.

Manufacturers of—

Rolling Mills,

Hydraulic or Geared Shears, Presses, Punches, Riveters.

CORLISS, REVERSING and BLOWING **ENGINES**

Iron, Steel and Brass Castings.

Miscellaneous Iron and Steel Works Machinery

CLASSIFIED LIST OF ADVERTISERS

Air and Gas Compressors.
Southwark Foundry and Machine Co.....10

Angles, Tees, Channels.
Jones & Laughlin Steel Co.....20

Banks.
Diamond National Bank.....10

Bars (concrete reinforcing)
Jones & Laughlin Steel Co.....20

Bearings.
Damascus Bronze Co.....3d cover

Blast Furnaces.
G. W. McClure, Son & Co..... 9

Brass Castings.
Mackintosh, Hemphill & Co.....13

Brass Goods.
Homestead Valve Mfg. Co.....12
Jas. H. Johnston.....26
Steam Equipment Mfg. Co.....26

Bronzes.
Damascu Bronze Co.....3d cover

Builders.
W. N. Kratzer & Co.....12
Pittsburgh Construction Co.....12

Building Materials.
D. J. Kennedy Co.....23

Castings.
Union Spring & Mfg. Co.....15

Cars and Car Wheels.
Phillips Mine & Mill Supply Co.....19

Cement.
Alpha Portland Cement Co.....23
Atlas Portland Cement Co.....23
D. J. Kennedy Co.....23
Universal Portland Cement Co.....back cover

Chain.
Jones & Laughlin Steel Co.....20
Standard Chain Co.....19

Coal and Coke.
D. J. Kennedy Co.....23

Coal and Coke Works Equipment.
Phillips Mine & Mill Supply Co.....19

Coal Tipples.
Jeffrey Mfg. Co.....19
Pittsburgh Construction Co.....12

Concrete Construction.
Atlas Portland Cement Co.....23
W. N. Kratzer & Co.....12

Condensers.
Mesta Machine Co.....13
Southwark Foundry and Machine Co.....10
Westinghouse Machine Co.....12

Contractors.
Dravo-Doyle Co.....17
Pittsburgh Construction Co.....12
Pittsburgh Piping & Equipment Co..... 9
Pittsburgh Valve & Foundry & Construction Co..... 9

Couplers.
The McConway & Torley Co.....4th cove

Drafting—Designing.
W. W. Macfarren..... 8

Drawing Materials.
B. K. Elliott Co.....24
The Lufkin Rule Co.....24
Pittsburgh Instrument & Machine Co.....24

Drills.
Morse Twist Drill & Machine Co.....20

Electrical Apparatus.
Westinghouse Electric & Mfg. Co.....12

Electric Furnaces.
Wile Electric Furnace Co.....20

Electric Power & Light.
Duquesne Light Co.....10

Elevators and Conveyors.
Jeffrey Mfg. Co.....19

Emery Wheels.
Somers, Fitler & Todd Co.....15

Engineering Instruments
B. K. Elliott Co.....24
The Lufkin Rule Co.....24
Pittsburgh Instrument & Machine Co.....24
S. H. Stupakoff..... 9

Engines—Blowing, Corliss Reversing.
Mackintosh, Hemphill & Co.....13
Westinghouse Machine Co.....12
Mesta Machine Co.....13

Engines—Gas.
Mesta Machine Co.....13
Westinghouse Machine Co.....12

Engines—Steam.
Dravo-Doyle Co.....17
Mackintosh, Hemphill & Co.....13
Mesta Machine Co.....13
Westinghouse Machine Co.....12

Engraving.
Robert Rawsthorne Eng. Co.....24

Feed Water Heaters and Purifiers.
Wm. B. Scaife & Sons Co.....17

Filters. Water.
Wm. B. Scaife & Sons Co.....17

Fire Brick.
Kier Fire Brick Co.....21

Forging Presses.
Mesta Machine Co.....13
Southwark Foundry and Machine Co.....10

Gas Exhausters.
Southwark Foundry and Machine Co.....10

Gas Meters.
Pittsburgh Meter Co.....17

Gas Producers
The Westinghouse Machine Co.....12

Gears.
Taylor-Wilson Mfg. Co.....15

Geologists.
F. G. Clapp..... 8

Generators.
Westinghouse Electric & Mfg. Co 12

Union Spring and Manufacturing Company

Manufacturers of Steel Castings, Coil Springs, Spring Plates, Elliptic Springs, Journal Box Lids, Kensington Journal Boxes

GENERAL OFFICES, FIRST NATIONAL BANK BUILDING, PITTSBURGH, PA.

50 Church Street, New York, N. Y. 700 Fisher Building, Chicago, Ill.
Missouri Trust Building, St. Louis, Mo.
American National Bank, Richmond, Va.

WORKS, NEW KENSINGTON, PA.

NORTON GRINDING WHEELS

ALUNDUM — CRYSTOLON

EXCLUSIVE AGENTS
LARGE STOCK ALWAYS ON HAND

Somers, Fitler & Todd Co.

327 Water Street, PITTSBURGH, PA.

Taylor-Wilson Manufacturing Co.

MANUFACTURERS OF

PIPE MILL MACHINERY

Pipe Threading and Cutting Machines, Socket Tappers, Testing Benches, Cross Rolls, Socket Reamers and other machinery used in the manufacture of Wrought Iron Pipe. Special Machinery.

MACHINE MOULDED GEARS

THOMSON AVENUE, Telephone 171 Victor McKEES ROCKS, PA.

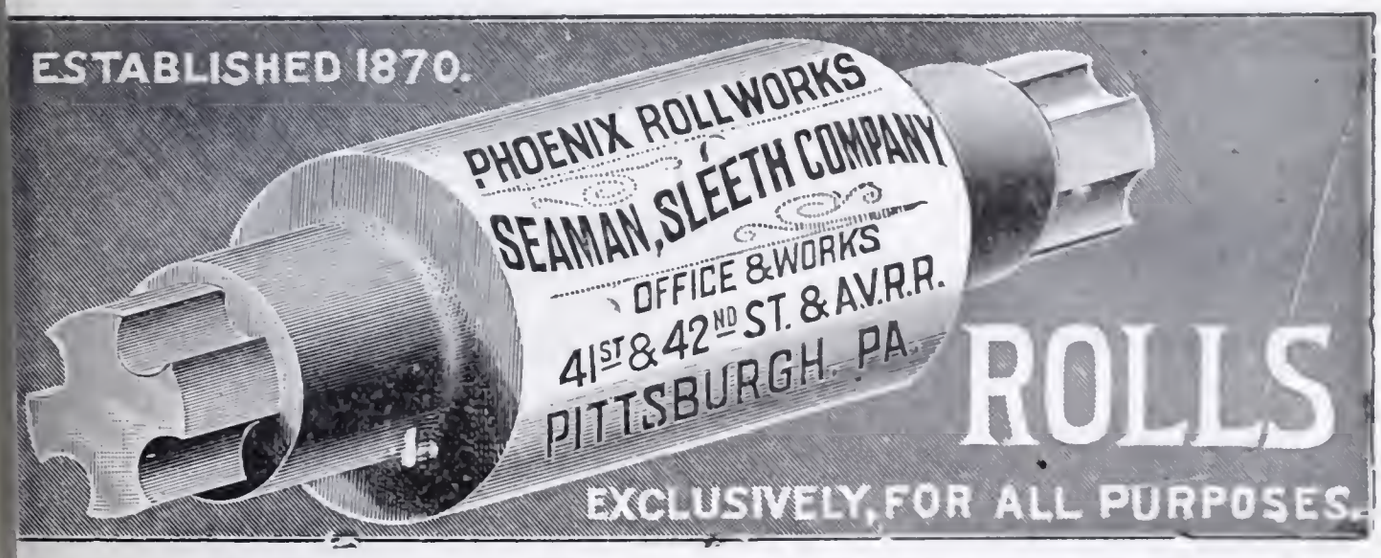

CLASSIFIED LIST OF ADVERTISERS—Continued

Gravel.
Iron City Sand Co....21
Rodgers Sand Co....21

Grinding Wheels.
Somers, Fitler & Todd Co....15

Half Tones.
Robert Rawsthorne Engraving Co....24

Hot Blast Stoves.
G. W. McClure, Sons & Co.... 9

Hotels.
Fort Pitt Hotel....10

Inspectors.
Gulick-Henderson Co.... 9
Hunt, R. W. & Co.... 9
Pittsburgh Testing Laboratory.... 8

Iron Castings.
Mackintosh, Hemphill & Co....13
Mesta Machine Co....13

Iron and Steel Works Equipment.
Mackintosh, Hemphill & Co....13

Locomotives—Electric.
Jeffrey Mfg. Co....19

Machine Tools.
Morse Twist Drill & Machine Co....20
Somers, Fitler & Todd Co....15
Taylor-Wilson Mfg. Co....15

Machinery Supplies.
Somers, Fitler & Todd....15

Machinists.
Somers, Fitler & Todd Co....15

Machinists Tools.
Morse Twist Drill & Machine Co....20

Malleable Iron Castings.
The McConway & Torley Co....4th cove

Meters.
National Meter Co....17
Pittsburgh Meter Co....17

Mill Builders.
W. N. Kratzer & Co....12
Pittsburgh Construction Co....12

Mill and Mine Supplies.
Phillips Mine & Mill Supply Co....19
Pittsburgh Piping & Equipment Co.... 9
Pittsburgh Valve Foundry & Construction Co.... 9
Somers, Fitler & Todd Co....15

Mining Machines and Drills.
Jeffrey Mfg. Co....19

Motors.
Westinghouse Electric & Mfg. Co....12

Nails.
Jones & Laughlin Steel Co....20

Oil Filters.
Elliott Company....11

Piling (steel sheet interlocking)
Jones & Laughlin Steel Co....20

Pipe Mill Machinery.
Taylor-Wilson Mfg. Co....15

Piping.
Pittsburgh Piping & Equipment Co.... 9
Pittsburgh Valve, Foundry & Construction Co.... 9

Plaster.
D. J. Kennedy Co....23

Power—Electric.
Duquesne Light Co....10

Power—Electric.
Duquesne Light Co....10

Power Plants.
Westinghouse Electric & Mfg. Co....12
Westinghouse Machine Co....12

Power Plant Specialties.
Dravo-Doyle Co....17
Elliott Company....11
Green Engineering Co....26
Homestead Valve Mfg. Co....12
Jas. H. Johnston....26
Pittsburgh Meter Co....17
Pittsburgh Piping & Equipment Co.... 9
Pittsburgh Valve, Foundry & Construction Co.... 9
Steam Equipment Mfg. Co....26

Presses, Punches.
Mackintosh, Hemphill & Co....13

Printing.
Robert Rawsthorne Engraving Co....24

Publications.
Engineering and Contracting....21
Metallurgical & Chemical Engineering....25

Pulleys.
Jones & Laughlin Steel Co....20

Pyrometers.
Gibb Instrument Co....22
S. H. Stupakoff.... 9

Rods.
Jones & Laughlin Steel Co....20

Rolling Mills.
Mackintosh, Hemphill & Co....13
Mesta Machine Co....13

Rolls.
Phoenix Roll Works—Seaman, Sleeth Co..15
Mesta Machine Co....13

Rules and Tapes.
B. K. Elliott Co....24
Lufkin Rule Co....24

Sand.
Iron City Sand Co....21
Rodgers Sand Co....21

Screens.
Phillips Mine & Mill Supply Co....19

Scientific Instruments.
S. H. Stupakoff.... 9

Shafting—Hangers.
Jones & Laughlin Steel Co....20

Water and Gas Meters

"Keystone"
"Eureka"

"Westinghouse"
"Ironclad"

For All Service Conditions

Pittsburgh Meter Company

General Office and Works, East Pittsburgh, Pa.

New York, 149 Broadway — Chicago, 5 South Wabash Ave. — Seattle, 802 Madison St.
Columbia, S. C., 1433 Main St. — Kansas City, 6 West 10th St.

Water Meters

CROWN, EMPIRE, NASH, GEM and PREMIER

Positive Displacement and Velocity
For 3/8 inch to 60 inch Pipes

National Meter Company

NEW YORK OFFICE
84 & 86 Chambers St.

HOUSE BUILDING
PITTSBURGH, PA.

WATER

SOFTENING AND FILTRATION
FOR BOILER FEED AND ALL OTHER USES
WM. B. SCAIFE & SONS CO., PITTSBURGH, PA.

INFORMATION GLADLY FURNISHED ON

The Latest Developments in Mill Drive

USING

NORDBERG UNIFLOW STEAM ENGINES

AND

DeLAVAL MIXED-PRESSURE TURBINES

DRAVO-DOYLE CO.
MERCHANT ENGINEERS

PITTSBURGH — PHILADELPHIA — CLEVELAND — INDIANAPOLIS

CLASSIFIED LIST OF ADVERTISERS—Continued

Shears.
Mackintosh, Hemphill & Co.....13

Spikes.
Jones & Laughlin Steel Co.....20

Springs.
Union Spring & Mfg. Co.....15

Stacks.
Wm. B. Scaife & Sons Co.....17

Stand Pipes.
Pittsburgh-Des Moines Steel Co.....3d cover

Steam Goods.
Elliott Company.....11
Homestead Valve Mfg. Co.....12
Jas. H. Johnston.....26
Steam Equipment Mfg. Co.....26

Steam Turbines.
Southwark Foundry and Machine Co.....10
Westinghouse Machine Co.....12

Steel (structural).
Jones & Laughlin Steel Co.....20

Steel Castings.
The McConway & Torley Co.....4th cover
Mackintosh, Hemphill & Co.....13
Mesta Machine Co.....13
Union Spring & Mfg. Co.....15

Stokers—Mechanical.
American Engineering Co.....2d cover
Green Engineering Co.....26
George J. Hagan..... 8
Westinghouse Machine Co.....12

Structural Steel.
Jones & Laughlin Steel Co..... 20
Pittsburgh Construction Co..... 12

Surveying Instruments.
B. K. Elliott Co..... 24
Lufkin Rule Co.....24
Pittsburgh Inst. & Mach. Co.....24

Tanks.
Pittsburgh-Des Moines Steel Co.....3d cover
Wm. B. Scaife & Sons Co.....17

Tapes.
The Lufkin Rule Co.....24

Tin Plate.
Jones & Laughlin Steel Co.....20

Transmission Equipment.
Jones & Laughlin Steel Co.....20

Tube Mill Equipment.
Taylor-Wilson Mfg. Co.....15

Turbines—Steam.
Dravo-Doyle Company.....17
Westinghouse Machine Co.....12

Typewriters.
L. C. Smith & Bros.....22

Valves.
Homestead Valve Mfg. Co.....12
Jas. H. Johnston.....26
Pittsburgh Piping & Equipment Co..... 9
Pittsburgh Valve, Foundry & Construction Co..... 9
Steam Equipment Mfg. Co.....26

Water Filters.
Elliott Company.....11
Wm. B. Scaife & Sons Co.....17

Water Meters.
National Meter Co.....17
Pittsburgh Meter Co.....17

Water Softening and Purifying Systems.
Wm B. Scaife & Sons Co.....17

Water Strainers.
Elliott Company.....11

Water Towers.
Pittsburgh-Des Moines Steel Co.....3d cover

Wood Preserving.
Pittsburgh Wood Preserving Co.....19

Wire—Copper, Electric.
Jones & Laughlin Steel Co.....20
Westinghouse Electric & Mfg. Co.....12

CLASSIFIED PROFESSIONAL CARDS.

Attorneys—Patent.
Kay, Totten & Powell..... 8
Keller, M. Arthur..... 8
Winter, Frederick W..... 8

Chemists.
Stahl, K. F..... 8

Engineers—Civil.
Diescher, S. & Sons..... 8
Donley, Wm. Mc..... 8
Duff, Samuel E..... 8
Hunt, Robert W. & Co..... 9
Schellenberg, F. Z..... 8
Swensson, Emil..... 9
Wilkins Co., W. G..... 8

gineers—Chemical.
Hunt, Robert W. & Co..... 9
Pittsburgh Testing Laboratory... 8

Engineers—Mechanical.
Diescher, S. & Sons..... 8
Hagan, George J..... 8
Kennedy, Julian..... 9
Macfarren, Walter W..... 8
McClure, Son & Co..... 9
Stupakoff, S. H..... 9
Thomas, Geo. P..... 8

Engineers—Mining.
Clapp, Frederick G..... 8
Fohl, W. E..... 8
Schellenberg, F. Z..... 8

Geologists.
Clapp, F. G.....

Inspectors.
Gulick-Henderson Co..... 9
Hunt, R. W. & Co..... 9
Pittsburgh Testing Laboratory 8

Power Plant Engineers.
Dravo-Doyle Co.....17

ESTABLISHED 1863

PHILLIPS MINE & MILL SUPPLY CO.

PITTSBURGH, PA.

Works, South 23d, 24th, Jane and Mary Streets
Office, 2227 Jane Street

Screens,
Screen Bars,
Screening Plants
Complete,
Car Dumps,
Cars,
Car Wheels
Larry Wagons,
Hitchings, Etc.

LET US SUBMIT PLANS AND ESTIMATES.

Manufacturers of

Coal and Coke Works Equipment

Jeffrey Complete Machinery Equipments

For Coal Mines, Tipples and Retail Coal Pockets

Coal Cutters, Locomotives, Drills, Elevators, Conveyors, Screens, Crushers, Pulverizers, Wagon and Truck Loaders, Power Transmission Machinery, etc.

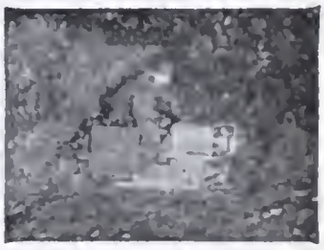

Write Dept. 46 for latest Bulletins

JEFFREY MFG. CO., 946 North Fourth St., Columbus, O.

Pittsburgh Office: 1710 Farmers Bank Building

"MORSE"

Twist Drills and Tools

The necessary requirements of high-class tools are Speed, Exactness, Quality, Economy. All are combined in

"MORSE" TOOLS

For nearly Fifty Years they have been known by and sold to thousands of satisfied users. They are up-to-date, progressive, well-made, accurate tools. Carbon and High Speed Steel.

Twist Drills, Reamers, Cutters

Send for Illustrated Catalogue Free to all interested

Morse Twist Drill & Machine Co.

New Bedford, Mass. U.S.A.

Power Transmission Machinery

This branch has been a specialty with us for many years.

We make and erect complete power transmission equipments for many of the most important manufacturers in the United States.

Our foundries and machine shops are large and fully equipped to turn out all grades and sizes of shafting, couplings, bearings, pulleys, rope sheaves, mule stands, belt tighteners, friction clutch pulleys, etc.

Special Booklet of Interest on the Subject

Jones & Laughlin Steel Co.

American Iron & Steel Works,

PITTSBURGH, PA.

TELEPHONES:
Main Office { C. D. T. 1353 & 1354 Court
P. & A. 2292 Main
Yards { C. D. T. 3129 Cedar
" 790 Court

STEAMERS
MARGARET CHARLOTTE
REBECCA HARRIET
RIVAL TWILIGHT
FLORA SNIPE

RODGERS SAND CO.

Dealers and Shippers of all kinds of

Sand & Gravel & Builders Supplies

By RIVER, RAIL OR WAGON

Cor. Wood & Water Street PITTSBURG, PA.

IRON CITY SAND COMPANY

Dealers in RIVER SAND AND GRAVEL

Office, Room 709 Fulton Bldg., corner Sixth Street & Duquesne Way, Pittsburgh, Pa.

Bell Telephone Grant 2017. P. & A. Telephone Main 1598.

"SALINA"
"ETNA"
"LYON"
"YOUGH"

ESTABLISHED 1845

PITTSBURGH, PA.

Manufacturers of High Grade FIRE CLAY and SILICA BRICK

ENGINEERING-CONTRACTING

tells how all classes of work are done so as to save money and make money, and it gives itemized prices covering every detail of the construction. These are taken from the private records of men having charge of the work and are reliable and valuable. This is a

Methods and Cost

periodical and the only one of its kind in the world. It is read regularly (and in nearly every case the files are kept for permanent binding) READ BY MORE PERSONS INTERESTED IN ENGINEERING CONSTRUCTION THAN ANY OTHER SINGLE PERIODICAL.

Price, $2 for 52 Issues
Sample Copies—FREE

ENGINEERING-CONTRACTING

355 DEARBORN STREET, CHICAGO

A 5 DAY TRIAL

OF THE

"I-RITE"

Temperatures at Sight

Pyrometer will show the necessity of a knowledge of the temperature of the piece under treatment (not the furnace temperature). The instrument can be carried in the pocket. (PRICE $25.00).

Gibb Instrument Company

Highland Building

PITTSBURGH, PA.

Hiland 5966

Reducing The Cost of Upkeep—

Ball Bearing ; Long Wearing

THE INSTALLATION *of*

L. C. Smith & Bros.

Typewriters

is invariably followed by the discovery that the bills for ribbons are much less than before. A large corporation recently found that its ribbon expense was cut in two. This is not an accident. It is the result of the mechanical construction that makes the L. C. Smith & Bros. cheapest to maintain. The ball bearings give light touch and eliminate pounding impact. The ribbon is actuated by the carriage, not the typebar. The ribbon mechanism is automatic, so that the ribbon reverses at the instant the end is reached and without added strain. Low ribbon cost, low cost of maintenance and the highest efficiency—these are guaranteed to L. C. Smith & Bros. users.

DEMONSTRATIONS FOR THE ASKING

L. C. SMITH & BROS. TYPEWRITER CO.

Home Office and Factory, SYRACUSE, N. Y.

Branches in All Principal Cities

4031 Jenkins Arcade, Pittsburgh, Pa.

The Reputation

for uniform high quality held by Atlas Portland Cement is not easily gained—nor easily maintained. It *is* maintained tho'---an asset equally to buyer or seller

THE ATLAS PORTLAND CEMENT CO.
PORTLAND
ATLAS
CEMENT
30 BROAD ST. NEW YORK

ALPHA PORTLAND CEMENT COMPANY
ALPHA
PORTLAND
GENERAL OFFICE
EASTON.
PENNA
CEMENT
MANUFACTURERS

ALPHA
PORTLAND CEMENT

The Recognized Standard American Brand.
Only One Grade Manufactured.

ANNUAL OUT-PUT 7,000,000 BARRELS

PITTSBURGH OFFICE,
OLIVER BUILDING

GENERAL OFFICE,
EASTON, PA.

D. J. Kennedy Company

SOLE DISTRIBUTERS

LEHIGH PORTLAND
VICTORIA KEEN'S
CUMBERLAND
POTOMAC

CEMENT

ROMAN
ASBESTIC
WALL
PLASTER

Branch Office—
1501 Arrott Building

6366 Frankstown Ave.

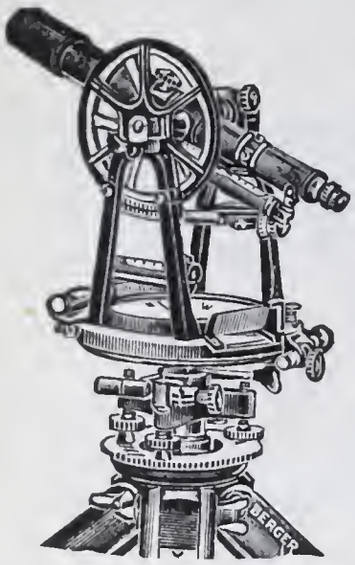

B. K. Elliott Company

TRANSITS and LEVELS

all of best known makes.
Repairing of old instruments.

DRAWING MATERIALS

of every description.

Ask for our New 439 page Cloth Bound Illustrated Catalogue

CLEVELAND
737 Prospect Ave.

PITTSBURGH
ELLIOTT BUILDING
126 Sixth St.

PITTSBURGH INSTRUMENT & MACHINE CO.
236 THIRD AVE., PITTSBURGH, PA.

Manufacturers of

TRANSITS AND LEVELS

We repair Field, Mine and Drafting Room Instruments

Best Equipped Shop in Western Penna.

LUFKIN MEASURING TAPES

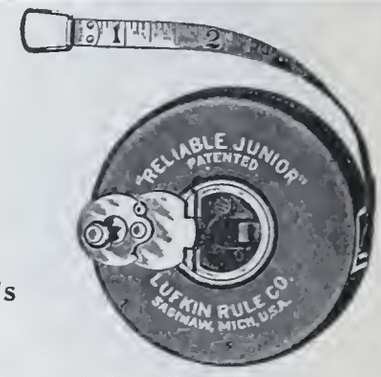

ARE SUPERIOR

This is the verdict of those who have used them, and it's the principal reason for our increasing sales. It will be proved to you if you try them

Sold Everywhere
NEW YORK

THE LUFKIN RULE CO.

Send for Catalog
SAGINAW, MICH.

SCHOOL OF MINES, UNIVERSITY OF PITTSBURGH
M. E. Wadsworth, A. M., PH. D., Dean
New building, new laboratories, and equipment. Located in a great Mining and Metallurgical center. Courses in Ceramics, Cements, Concretes, Geology, Metallurgy, Assaying, Mineralogy, Mining, Surveying, Engineering, Mining Geology, Economics and Law, Ore Dressing, Coal Washing, Paleontology, Petrography, etc.
For Bulletin, Address
S. B. LINHART, Secretary of the University, Grant Boulevard, Pittsburgh

NORWICH UNIVERSITY
THE MILITARY COLLEGE OF VERMONT
Civil and Electrical Engineering
NORTHFIELD, VT.

Unrivaled Service for the Chemical Engineer and Metallurgist
This is what is offered by METALLURGICAL AND CHEMICAL ENGINEERING, which thoroughly covers practice and progress in industrial chemistry, electrochemistry and in all branches of ore treatment and refinement, including the smelting of iron, refining and heat treatment of steel, etc.
This Journal is a great technical newspaper, invaluable for reading and reference to the progressive engineer, chemist, manager and superintendent interested in the fields it covers.
Write today for a sample copy, or better still, send $3.00 for a yearly subscription
Published Semi Monthly, $3.00 a year. Foreign and Canadian, $4.00 a year.
METALLURGICAL AND CHEMICAL ENGINEERING
239 WEST 39th STREET, NEW YORK

BELL COURT 1396

JAS. H. JOHNSTON

6047 JENKINS ARCADE BUILDING

PITTSBURGH, PA.

Lagonda Tube Cleaners
Water Strainers
Automatic Valves
Anderson Steam Traps
Perfection Pump Valves
Power Plant Accessories

Green Chain Grate Stokers

Green Engineering Co.,
East Chicago, Ind.
Pittsburgh office 2545 Oliver Bldg.

Bulletin No. 1 Green Chain Grate Stokers
Bulletin No. 2 Geco Steam Jet Ash Conveyors

Geco Steam Jet Ash Conveyors

Proceedings of

The Engineers' Society

of

Western Pennsylvania

PROPERTY OF THE PENNA. STATE LIBRARY. NOT TO BE TAKEN FROM LIBRARY.

Vol. 33 February, 1917 No. 1

Contents

The Window Glass Machine.....By Robert Linton
Historic Failures of Masonry Structures .....By Horace R. Thayer
Minutes of Meetings
Alphabetical Advertising Index
Classified Advertising Index

Pittsburgh

Published by the Society, 2511 Oliver Building, Pittsburgh
Monthly except August and September

Fifty cents a number Five dollars a year

Copyrighted 1917 by The Engineers' Society of Western Pennsylvania
Entered as second class matter at the Pittsburgh Post Office

"DAMASCUS"

Denotes Durability in

MILL BEARINGS

Damascus Maximum Service

Bearing cost must not be measured by initial price—Damascus Mill Bearings prove cheapest because they last longest—they protect the roll neck—they minimize shut downs—*they are designed for the service.*

Write or phone to-day

Damascus Bronze Company

Pittsburgh

Standard Municipal Tank
100,000 Gallons

ELEVATED STEEL TANKS

For Municipal, Railway & Fire Protection Service. Standard sizes kept in stock; shipped and erected anywhere on short notice.

Inquiries invited and plans, specifications and estimates furnished on water towers standpipes, tanks for storage of oil, grain, acids, coal, molasses, etc. Special structures for industrial purposes designed and built.

Standard 60,000 gallon Tank for Railway Service.

PITTSBURGH-DES MOINES STEEL CO.

OFFICES: Pittsburgh, Pa., 701 Curry Bldg.
New York City, 38 Church St.
Des Moines, Ia., 914 Tuttle St.
Dallas, Tex., 1218 Praetorian Bldg.
San Francisco, Cal., 1316 Rialto Bldg.

FACTORIES: Pittsburgh, Pa., and Des Moines, Ia.

THE PENN COUPLER

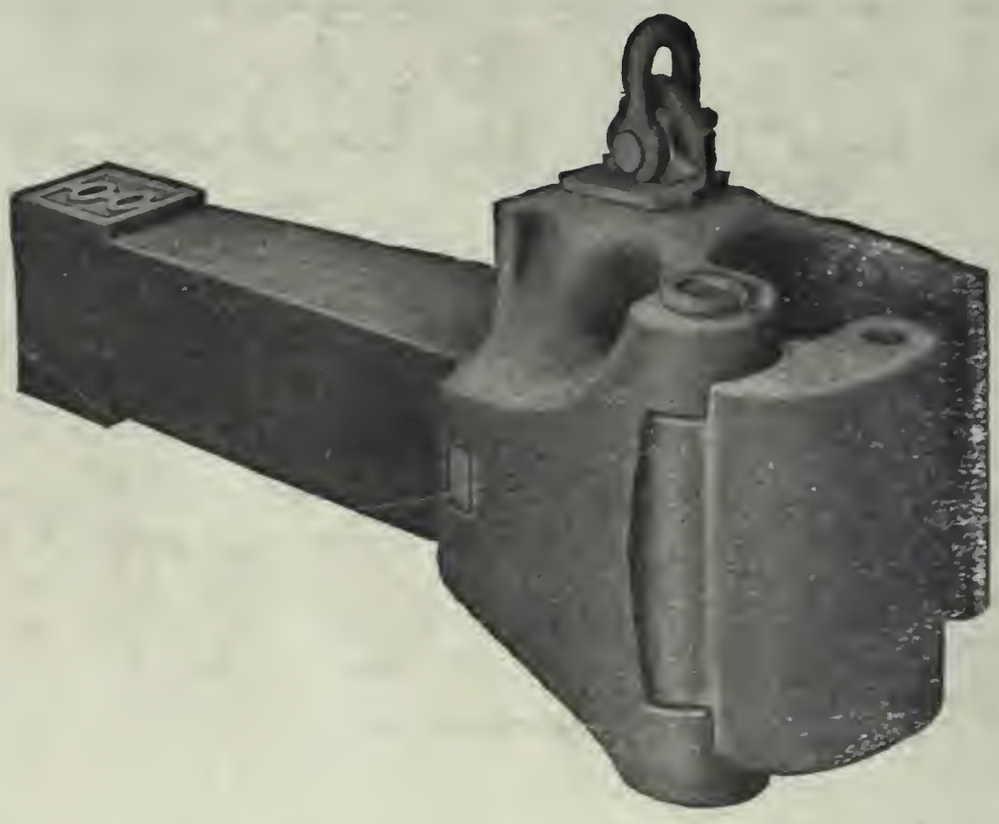

This coupler, which is a combination and modification of the Pitt and Janney X Couplers manufactured by us, has all the desirable features of those couplers, and at the same time retains the simplicity of the early types of the Janney Coupler.

This coupler has the features of a "Lock-Set," a "Lock-to-the-Lock" and a "Knuckle-Opener," and complies fully with all the requirements and recommendations of the M. C. B. Association and the Safety Appliance Law.

Lock-Set. Lock setting is accomplished by the locking block when raised to the uncoupling position, resting on a seat on the inside wall of the coupler head, from which seat it is dislodged on the closing movement of the knuckle in the act of coupling.

Lock-to-the-Lock. The locking pin cannot climb, being held in the locked position by the trigger, a projection near the upper end of which engages the under side of the top wall of the coupler head, thus preventing accidental uncoupling.

Knuckle-Opener. The knuckle-opener pushes the knuckle open to its fullest range of movement from a fully closed position or from any partially open position, and its path of movement is such as to insure easy and complete opening of the knuckle.

Especial attention is called to the large area (practically 5 square inches) of the locking surface on the locking block and the knuckle in this coupler, and to the fact that no portion of the locking block extends beyond the bottom wall of the coupler.

This coupler has the desirable feature of easy accessibility of parts, thus facilitating repairs.

Manufactured by

The McCONWAY & TORLEY CO.

PITTSBURGH, PA.

MALLEABLE IRON AND STEEL CASTINGS